737-600/-700/-800/-900 Operations Manual

The Boeing Company

Copyright © 1997
The Boeing Company
All Rights Reserved

Document Number D6-27370-TBC
November 20, 1997

Revision Number: 10
Revision Date: September 30, 2002

Copyright Information

Boeing claims copyright in each page of this document only to the extent that the page contains copyrightable subject matter. Boeing also claims copyright in this document as a compilation and/or collective work.

The right to reproduce, distribute, display, and make derivative works from this document, or any portion thereof, requires a license from Boeing. For more information, contact The Boeing Company, P.O. Box 3707, Seattle, Washington 98124.

Boeing 707, 717, 727, 737, 747, 757, 767, 777, DC-8, DC-9, DC-10, MD-10, MD-11, MD-80, MD-90, BBJ, Boeing Business Jet, the Boeing logo symbol, and the red-white-and-blue Boeing livery are all trademarks owned by The Boeing Company; and no trademark license (either expressed or implied) is granted in connection with this document or otherwise.

Volume 1 Chapter

Table of Contents 0.0.1
Model Identification 0.1.1
Introduction 0.2.1
Abbreviations 0.3.1
Revision Record 0.4.1
List of Effective Pages 0.5.1
Bulletin Record 0.6.1
Service Bulletins 0.7.1
Limitations L
Normal Procedures ..... NP
Supplementary Procedures ..... SP
Performance - Dispatch ..... PD

Volume 2

Airplane General, Emergency Equipment, Doors, Windows 1
Air Systems 2
Anti-Ice, Rain 3
Automatic Flight 4
Communications 5
Electrical 6
Engines, APU 7
Fire Protection 8
Flight Controls 9
Flight Instruments, Displays 10
Flight Management, Navigation 11
Fuel 12
Hydraulics 13
Landing Gear 14
Warning Systems 15

Copyright © The Boeing Company. See title page for details.

DO NOT USE FOR FLIGHT

Quick Reference Handbook (QRH)

Normal Checklists ..... NC
Checklist Introduction CI
Performance - Inflight ..... PI
Non-Normal Checklists ..... NNC
Non-Normal Maneuvers ..... NNM
Index

Copyright © The Boeing Company. See title page for details.

General

The airplanes listed in the table below are covered in the operations manual. The table information is used to distinguish data peculiar to one or more, but not all of the airplanes. Where data applies to all airplanes listed, no reference is made to individual airplanes.

Airplane number is supplied by the operator. Registry number is supplied by the national regulatory agency. Serial and tabulation number are supplied by Boeing.

Airplane Number	Registry Number	Serial Number	Tabulation Number
			YX600
			YX700
			YX800
			YX900

Copyright © The Boeing Company. See title page for details.

Intentionally
Blank

Copyright © The Boeing Company. See title page for details.

General

This Operations Manual has been prepared by the Boeing Commercial Airplane Group, Commercial Aviation Services organization. The purpose of this manual is to:

- provide the necessary operating limitations, procedures, performance, and systems information the flight crew needs to safely and efficiently operate the 737 airplane during all anticipated airline operations
- serve as a comprehensive reference for use during transition training for the 737 airplane
- serve as a review guide for use in recurrent training and proficiency checks
- provide necessary operational data from the FAA approved airplane flight manual (AFM) to ensure that legal requirements are satisfied
- establish standardized procedures and practices to enhance Boeing operational philosophy and policy.

This manual is prepared for the owner/operator named on the title page specifically for the airplanes listed in the "Model Identification" section. It contains operational procedures and information, which apply only to these airplanes. The manual covers the Boeing delivered configuration of these airplanes. Changes to the delivered configuration are incorporated when covered by contractual revision agreements between the owner/operator and The Boeing Company

This manual is not suitable for use for any airplanes not listed in the "Model Identification" section. Further, it may not be suitable for airplanes that have been transferred to other owners/operators.

Owners/operators are solely responsible for ensuring the operational documentation they are using is complete and matches the current configuration of the listed airplanes. This includes the accuracy and validity of all information furnished by the owner/operator or any other party. Owners/operators receiving active revision service are responsible to ensure that any modifications to the listed airplanes are properly reflected in the operational procedures and information contained in this manual.

This manual is structured in a two–volume format with a quick reference handbook (QRH). Volume 1 includes operational limitations, normal and supplementary procedures, and dispatch performance data. Volume 2 contains systems information. The QRH contains all checklists necessary for normal and non–normal procedures as well as in–flight performance data.

Copyright © The Boeing Company. See title page for details.

The manual is periodically revised to incorporate pertinent procedural and systems information. Items of a more critical nature will be incorporated in operational bulletins and distributed in a timely manner. In all cases, such revisions and changes must remain compatible with the approved AFM with which the operator must comply. In the event of conflict with the AFM, the AFM shall supersede.

This manual is written under the assumption that the user has had previous multi–engine jet aircraft experience and is familiar with basic jet airplane systems and basic pilot techniques common to airplanes of this type. Therefore, the operations manual does not contain basic flight information that is considered prerequisite training.

Any questions about the content or use of this manual can be directed to:

Commercial Aviation Services
Boeing Commercial Airplane Group
P. O. Box 3707, M/S 20–89
Seattle, Washington 98124–2207 USA

Attention: Senior Manager, Flight Technical Publications

Organization

The operations manual is organized in the following manner.

Volume 1

- Preface – contains general information regarding the manual's purpose, structure, and content. It also contains lists of abbreviations, a record of revisions, bulletins, and a list of effective pages.
- Limitations and Normal Procedures chapters cover operational limitations and normal procedures. All operating procedures are based on a thorough analysis of crew activity required to operate the airplane, and reflect the latest knowledge and experience available.
- Supplementary Procedures chapter covers those procedures accomplished as required rather than routinely on each flight.
- Performance Dispatch chapter contains performance information necessary for self dispatch.

Volume 2 – Chapters 1 through 15 contain general airplane and systems information. These chapters are generally subdivided into sections covering controls and indicators and systems descriptions.

Quick Reference Handbook (QRH) – The QRH covers normal checklists, in–flight performance, non–normal checklists, and non–normal maneuvers.

Copyright © The Boeing Company. See title page for details.

Page Numbering

The operations manual uses a decimal page numbering system. The page number is divided into three fields; chapter, section, and page. An example of a page number for the hydraulics chapter follows: chapter 13, section 20, page 3.

Example Page Number

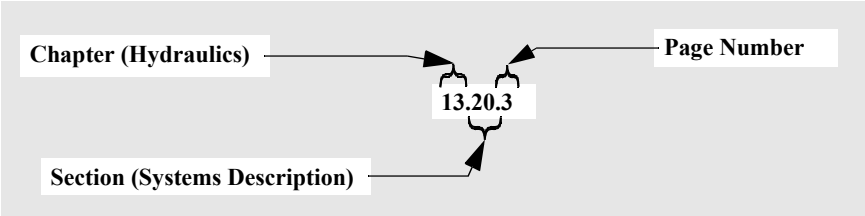

Page Identification

Each page is identified by a customer document number and a page date. The customer document number is composed of the general 737 operations manual number, D6–27370–, and is followed by the airplane model and customer identification. The page date is the date of publication of the manual or the most recent revision date.

Example Page Identification

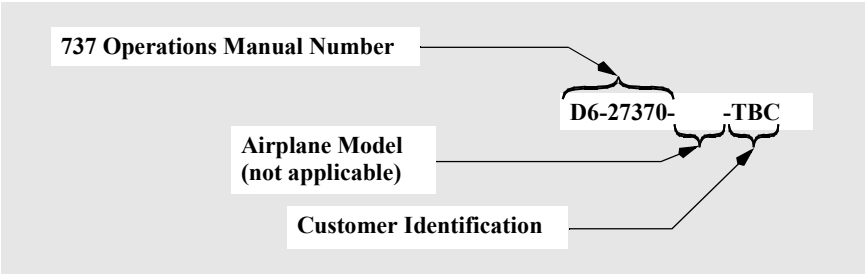

Warnings, Cautions, and Notes

The following levels of written advisories are used throughout the manual.

WARNING: An operating procedure, technique, etc., that may result in personal injury or loss of life if not carefully followed.

CAUTION: An operating procedure, technique, etc., that may result in damage to equipment if not carefully followed.

Note: An operating procedure, technique, etc., considered essential to emphasize. Information contained in notes may also be safety related.

Copyright © The Boeing Company. See title page for details.

Operations Manual Configuration

The material in this 737-600/700/800/900 Boeing Company operations manual is not customized to a specific airplane configuration. The user must ascertain that this material is applicable for the intended use.

Configuration [Option] Annotations

Throughout this document, technical data is provided for many of the configuration options available for 737-600/700/800/900 airplanes.

Options at Chapter / Section Level

Configuration specific information is shown (distinguished) by:

- options annotated by the chapter/section title; e.g.
  EFIS/MAP - Controls and Indicators (Chapter 10.10)
  PFD/ND - Displays (Chapter 10.11).

Options Within a Chapter / Section

Configuration specific information is shown (distinguished) by:

- model sensitive options [737-xxx] using only the model designator; e.g.
  [737-800]
  Tail skid ..... Check
- obvious single options [Option] where the configuration variable or nomenclature stands out in surrounding text, graphic or title; e.g.
  [Option]
  VOICE RECORDER switch ..... As required
- specific options [Option - xxx, xxxx] where the configuration variable(s) are stated within the annotation (multiple variables, if applicable, are separated by commas); e.g.
  [Option - VHF-3, ACARS, audio entertainment system]
  Do not use VHF-3 for ATC communications with ACARS operational, or if audio entertainment system is in use.
- generic options [Option - Typical, xxx, xxxx] where multiple configuration options exist, but only a single option is shown (multiple variables, if applicable, are separated by commas); e.g.
  [Option - Typical]
  ‘one of numerous possible VHF control panel graphics might be shown here’
- part number options [Option - ‘Boeing or vendor part number’] where the option is part number specific (multiple variables, if applicable, are separated by commas); e.g.
  [Option - Gables G7400-04, -06]
  ‘a part number specific graphic might be shown here’.

Copyright © The Boeing Company. See title page for details.

Schematic Symbols

Symbols shown are those which may not be identified on schematic illustrations.

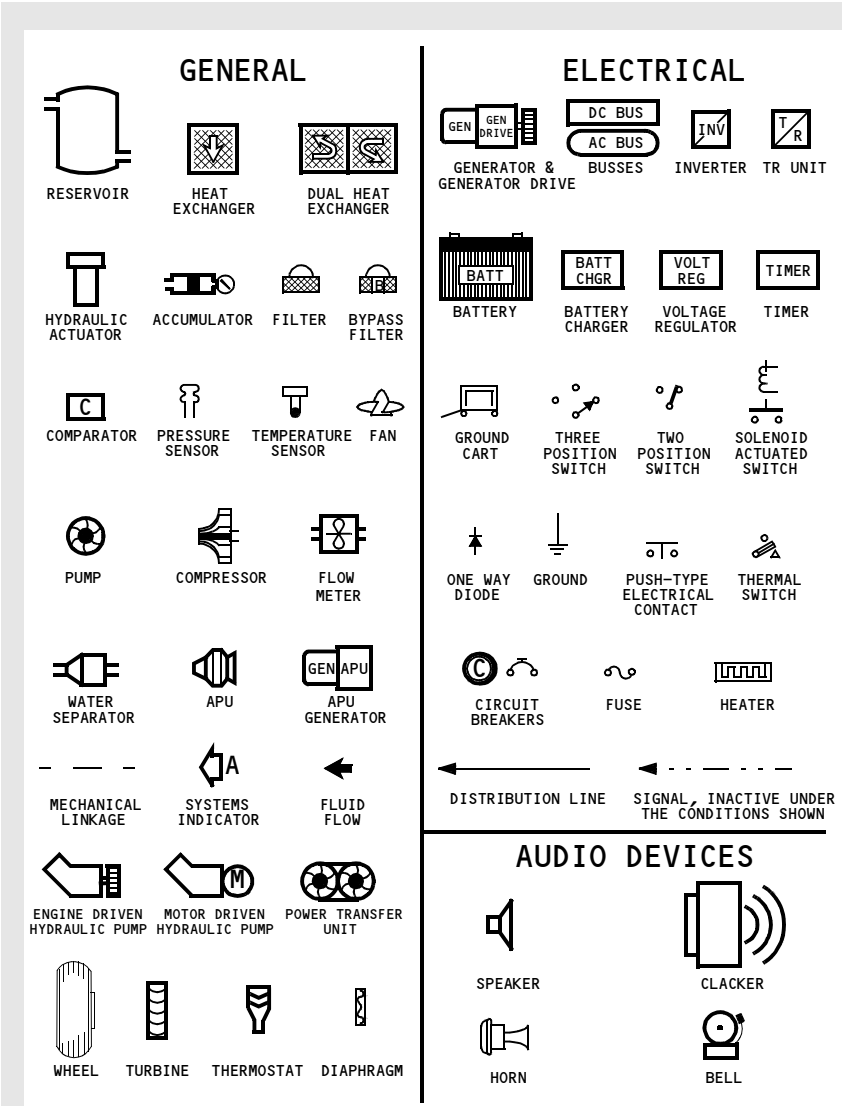

Copyright © The Boeing Company. See title page for details.

DO NOT USE FOR FLIGHT

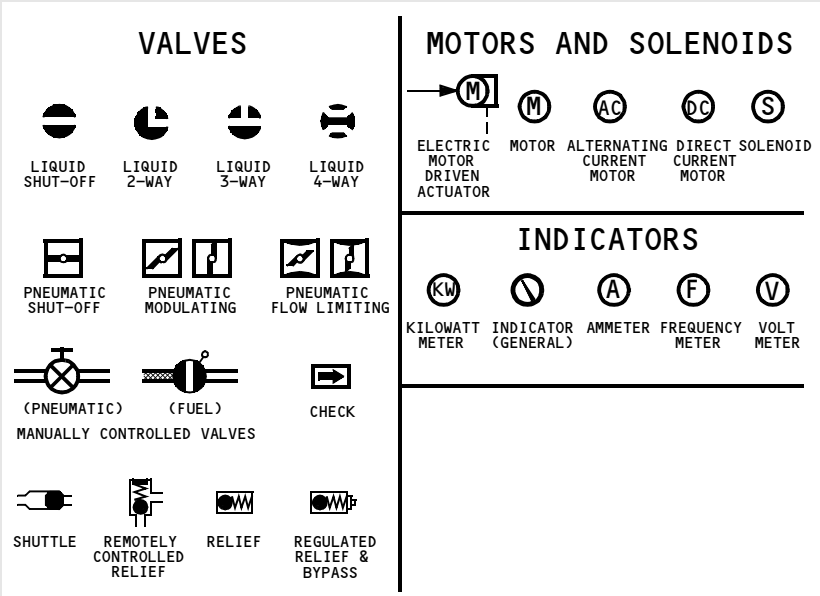

Copyright © The Boeing Company. See title page for details.

General

The following abbreviations may be found throughout the manual. Some abbreviations may also appear in lowercase letters. Abbreviations having very limited use are explained in the chapter where they are used.

A	
AC	Alternating Current
ACARS	Aircraft Communications Addressing and Reporting System
ACP	Audio Control Panel
ACT	Active
ADF	Automatic Direction Finder
ADIRS	Air Data Inertial Reference System
ADIRU	Air Data Inertial Reference Unit
ADM	Air Data Module
AFDS	Autopilot Flight Director System
AFM	Airplane Flight Manual (FAA approved)
AGL	Above Ground Level
AI	Anti–Ice
AIL	Aileron
ALT	Altitude
ALTN	Alternate
AM	Amplitude Modulation
ANP	Actual Navigation Performance
ANT	Antenna
AOA	Angle of Attack
A/P	Autopilot
APP	Approach
APU	Auxiliary Power Unit
ARINC	Aeronautical Radio, Incorporated
ARPT	Airport
A/T	Autothrottle
ATA	Actual Time of Arrival
ATC	Air Traffic Control
ATT	Attitude
AUTO	Automatic
AUX	Auxiliary
AVAIL	Available
B	
BARO	Barometric
BRT	Bright
BTL DISCH	Bottle Discharge (fire extinguishers)
B/C	Back Course

Copyright © The Boeing Company. See title page for details.

DO NOT USE FOR FLIGHT

C	
C	Captain Celsius Center
CANC/ RCL	Cancel/Recall
CAPT	Captain
CB	Circuit Breaker
CDS	Common Display System
CDU	Control Display Unit
CG	Center of Gravity
CHKL	Checklist
CLB	Climb
COMM	Communication
CON	Continuous
CONFIG	Configuration
CRS	Course
CRZ	Cruise
CTL	Control
D	
DC	Direct Current
DDG	Dispatch Deviations Guide
DEP ARR	Departure Arrival
DES	Descent
DEU	Display Electronic Unit
DISC	Disconnect
DME	Distance Measuring Equipment
DSP	Display Select Panel
DSPL	Display

E	
E/D	End of Descent
E/E	Electrical and Electronic
EEC	Electronic Engine Control
EFIS	Electronic Flight Instrument System
EGPWS	Enhanced Ground Proximity Warning System
EGT	Exhaust Gas Temperature
ELEC	Electrical
ELEV	Elevator
EMER	Emergency
ENG	Engine
EO	Engine Out
ETOPS	Extended Range Operation with Twin Engine Airplanes
EVAC	Evacuation
EXEC	Execute
EXT	Extend
F	
F	Fahrenheit
FAC	Final Approach Course
FCTL	Flight Control
F/D or FLT DIR	Flight Director
FMA	Flight Mode Annunciations
FMC	Flight Management Computer
FMS	Flight Management System

Copyright © The Boeing Company. See title page for details.

F/O	First Officer
FPA	Flight Path Angle
FPM	Feet Per Minute
FPV	Flight Path Vector
FREQ	Frequency
FT	Feet
FWD	Forward
G	
GA	Go–Around
GEN	Generator
GLS	GPS Landing System or GNSS Landing System
G/P	Glidepath
GPS	Global Positioning System
GPWS	Ground Proximity Warning System
GS	Ground Speed
G/S	Glide Slope
H	
HDG	Heading
HDG REF	Heading Reference
HDG SEL	Heading Select
HF	High Frequency
HPA	Hectopascals
HUD	Head-Up Display
HYD	Hydraulic
I	
IAN	Integrated Approach Navigation
IAS	Indicated Airspeed

IDENT	Identification
IFE	In-Flight Entertainment System
IGN	Ignition
IN	Inches
IND LTS	Indicator Lights
ILS	Instrument Landing System
INBD	Inboard
INOP	Inoperative
INT or INTPH	Interphone
INTC CRS	Intercept Course
IRS	Inertial Reference System
ISFD	Integrated Standby Flight Display
ISLN	Isolation
K	
K	Knots
KGS	Kilograms
KIAS	Knots Indicated Airspeed
L	
L	Left
LBS	Pounds
LDG ALT	Landing Altitude
LIM	Limit
LNAV	Lateral Navigation
LOC	Localizer
LWR CTR	Lower Center
LWR DSPL	Lower Display

Copyright © The Boeing Company. See title page for details.

DO NOT USE FOR FLIGHT

M	
M	Mach
MAG	Magnetic
MAN	Manual
MCP	Mode Control Panel
MDA	Minimum Descent Altitude
MEL	Minimum Equipment List
MFD	Multifunction Display
MHZ	Megahertz
MIC	Microphone
MIN	Minimum
MKR	Marker
MMO	Maximum Mach Operating Speed
MOD	Modify
MSG	Message
MTRS	Meters
MUH	Minimum Use Height
N	
NAV RAD	Navigation Radio
ND	Navigation Display
NM	Nautical Miles
NORM	Normal
N1	Low Pressure Rotor Speed
N2	High Pressure Rotor Speed
O	
OAT	Outside Air Temperature
OFST	Offset
OHU	Overhead Unit
OUTBD DSPL	Outboard Display
OVHD	Overhead
OVHT	Overheat
OVRD	Override
OXY or O2	Oxygen
P	
PA	Passenger Address
PASS	Passenger
PERF INIT	Performance Initialization
PF	Pilot Flying
PFC	Primary Flight Computers
PFD	Primary Flight Display
PNF	Pilot Not Flying
PNL	Panel
POS	Position
PREV	Previous
PROX	Proximity
POS INIT	Position Initialization
PRI	Primary
PSI	Pounds Per Square Inch
PTH	Path
PTT	Push To Talk
PWR	Power
PWS	Predictive Windshear System

Copyright © The Boeing Company. See title page for details.

R	
R	Right
RA	Radio Altitude Resolution Advisory
RDMI	Radio Distance Magnetic Indicator
REC	Recorder
RECIRC	Recirculation
REF	Reference
RET	Retract
RF	Refill
RNP	Required Navigation Performance
RPM	Revolutions Per Minute
RST	Reset
RTE	Route
RTO	Rejected Takeoff
RTP	Radio Tuning Panel
RUD	Rudder
RVSM	Reduced Vertical Separation Minimum
S	
SAT	Static Air Temperature
S/C	Step Climb
SELCAL	Selective Calling
SEL	Select
SPD	Speed
STA	Station
STAB	Stabilizer
STAT	Status
STBY	Standby
STD	Standard
SYS	System
T	
T or TRU	True
T or TK or TRK	Track
TA	Traffic Advisory
TAS	True Airspeed
TAT	Total Air Temperature
T/C	Top of Climb
TCAS	Traffic Alert and Collision Avoidance System
TDZE	Touch Down Zone Elevation
T/D	Top of Descent
TEMP	Temperature
TERR	Terrain
TFC	Traffic
TFR	Transfer
THR HOLD	Throttle Hold
TO	Takeoff
TO/GA	Takeoff/Go–Around
TRU	Transformer Rectifier Unit
U	
UNLKD	Unlocked
USB	Upper Side Band
UPR DSPL	Upper Display
UTC	Coordinated Universal Time

Copyright © The Boeing Company. See title page for details.

UTIL	Utility
V	
VANP	Vertical Actual Navigation Performance
VERT	Vertical
VHF	Very High Frequency
VMO	Maximum Operating Speed
VNAV	Vertical Navigation
VOR	VHF Omnidirectional Range
VR	Rotation Speed
VREF	Reference Speed
VRNP	Vertical Required Navigation Performance
VSI	Vertical Speed Indicator
V/S	Vertical Speed
VTK	Vertical Track
V1	Takeoff Decision Speed
V2	Scheduled Takeoff Target Speed
W	
WPT	Waypoint
WXR	Weather Radar
X	
XPDR or XPNDR	Transponder
XTK	Cross Track

Copyright © The Boeing Company. See title page for details.

Revision Transmittal Letter

To: All holders of The Boeing Company 737 Operations Manual, Boeing Document Number D6-27370-TBC.

Subject: Operations Manual Revision.

This revision reflects the most current information available to The Boeing Company 45 days before the subject revision date. The following revision highlights explain changes in this revision. General information below explains the use of revision bars to identify new or revised information.

Revision Record

No.	Revision Date	Date Filed
1	March 05, 1998	
3	January 29, 1999	
5	January 28, 2000	
7	June 06, 2001	
9	March 15, 2002	

No.	Revision Date	Date Filed
2	July 31, 1998	
4	July 30, 1999	
6	August 30, 2000	
8	October 15, 2001	
10	September 30, 2002	

General

The Boeing Company issues operations manual revisions to provide new or revised procedures and information. Formal revisions also incorporate appropriate information from previously issued operations manual bulletins.

The revision date is the approximate date the manual is approved for printing. The revision is mailed a few weeks after this date.

Formal revisions include a Transmittal Letter, a new Revision Record, Revision Highlights, and a current List of Effective Pages. Use the information on the new Revision Record and List of Effective Pages to verify the operations manual content.

Pages containing revised technical material have revision bars associated with the changed text or illustration. Editorial revisions (for example, spelling corrections) may have revision bars with no associated highlight.

The Revision Record should be completed by the person incorporating the revision into the manual.

Copyright © The Boeing Company. See title page for details.

Filing Instructions

Consult the List of Effective Pages (0.5). Pages identified with an asterisk (*) are either replacement pages or new (original) issue pages. Remove corresponding old pages and replace or add new pages. Remove pages that are marked DELETED; there are no replacement pages for deleted pages.

Be careful when inserting changes not to throw away pages from the manual that are not replaced. Using the List of Effective Pages (0.5) can help determine the correct content of the manual.

Revision Highlights

This section (0.4) replaces the existing section 0.4 in your manual.

Throughout the manual, airplane effectivity may be updated to reflect coverage as listed on the Preface - Model Identification page, or to show service bulletin airplane effectivity. Highlights are not supplied.

This manual is published from a database; the text and illustrations are marked with configuration information. Occasionally, because the editors rearrange the database markers, or mark items with configuration information due to the addition of new database content, some customers may receive revision bars on content that appears to be unchanged. Pages may also be republished without revision bars due to slight changes in the flow of the document.

Chapter 0 - Preface

Section 3 - Abbreviations

0.3.1 - Updated Abbreviations table to expand definition coverage.

Chapter L - Limitations

Section 10 - Operating Limitations

Operational Limitations

L.10.1 - Added limit to ensure Photoluminescent Floor Emergency Lighting is charged according to approved procedures prior to flight.

L.10.2 - Added restrictions for takeoff and landing on 30 meter wide runway.

Weight Limitations

L.10.3 - Added Note to provide Minimum Takeoff Weight and describe where to find lower Minimum Takeoff Weights for actual takeoff conditions.

Copyright © The Boeing Company. See title page for details.

Anti–Ice, Rain

L.10.4 - Added limitation for airplanes that have not been modified with either PRR 38506 or Service Bulletin 737-55A1080; airspeed is restricted to 270 KIAS after deicing/anti-icing of horizontal stabilizer unless applicable maintenance procedures have been accomplished.

Aircraft Communications Addressing and Reporting System

L.10.6 - Added caveat to ACARS use restrictions that allows certain message traffic to be transmitted or received if verified by approved operational procedures.

Flight Controls

L.10.8 - Added the limitation on use of the speedbrakes above 300 KIAS which applies to airplanes that have not been modified with stiffened elevator tabs on the horizontal stabilizer.

Look-Ahead Terrain Alerting (GPWS)

L.10.9 - Revised reference to Allied Signal document of airports in GPWS database to now reference Honeywell as the document owner.

Chapter NP - Normal Procedures

Section 20 - Amplified Procedures

Flight Deck Preparation – Captain

NP.20.14 - Revised normal procedures to preflight new display.

Descent and Approach Procedure

NP.20.35 - Revised amplified procedures to direct flight crews to position center tank fuel pump switch(es) off when low pressure light(s) illuminate.

NP.20.35 - Revised amplified procedures to direct flight crews to position the center tank fuel pump switch(es) off when the LOW PRESSURE light(s) illuminate.

Section 30 - Flight Patterns

Visual Traffic Pattern

NP.30.6 - Changed for standardization between the OM and FCTM.

Copyright © The Boeing Company. See title page for details.

Chapter SP - Supplementary Procedures

Section 6 - Electrical

Standby Power Test

SP.6.1 - In the Standby Power Test, the standby power bus is powered by the battery and should show battery voltage. The battery open circuit voltage is 26 volts; therefore the DC voltmeter readout can not be higher than 26 volts. The lower end should be set at 22 volts. Therefore, the DC voltmeter is changed to 24 +/- 2 volts. This change may have already appeared in your Operations Manual. Re-submitted because all customers may not have received this change.

Section 9 - Flight Controls

Flight Controls Check

SP.9.1 - The current Flight Controls Check supplementary procedure does not provide an adequate check of the rudder trim system for airplanes with the mechanical cam and spring rudder feel and centering unit. The test should be conducted with hydraulic power on the airplane.

Section 11 - Flight Management, Navigation

Temporary Level Off during Climb or Descent (Not at FMC Cruise Altitude)

SP.11.14 - Corrected to proper switch name.

Section 16 - Adverse Weather

Taxi–Out

SP.16.6 - The requirement to slowly cycle the control column after deicing only applies to airplanes that have not been modified with stiffened elevator tabs on the horizontal stabilizer.

Climb and Cruise

SP.16.9 - Added a CAUTION stating that above approximately Flight Level 350 wing anti-ice should not be used.

Chapter PD - Performance Dispatch

Section 13 - Text

Enroute

PD.13.3 - Corrected misspelled word minimum.

Landing

PD.13.5 - Replaced reference to A/C correction with reference to engine bleed corrections.

Copyright © The Boeing Company. See title page for details.

Section 21 - Enroute

Long Range Cruise Trip Fuel and Time

PD.21.2 - Reran data with new reference landing weight.

Section 23 - Text

Enroute

PD.23.3 - Corrected misspelled word minimum.

Section 33 - Text

Enroute

PD.33.3 - Corrected misspelled word minimum.

Section 40 - Takeoff

PD.40.1 - Section PD-900-26-LB-FAA-Sec40 added.

Section 41 - Enroute

PD.41.1 - Section PD-900-26-LB-FAA-Sec41 added.

Section 42 - Landing

PD.42.1 - Section PD-900-26-LB-FAA-Sec42 added.

Section 43 - Text

PD.43.1 - Section PD-900-26-LB-FAA-Sec43 added.

Enroute

PD.43.3 - Corrected misspelled word minimum.

Chapter 1 - Airplane General, Emergency Equipment, Doors, Windows

Section 20 - Instrument Panels

Aft Flight Deck Overview

1.20.2 - Added a graphic which depicts the Aft Flight Deck with the Enhanced Security Door installed.

Section 30 - Controls and Indicators

Flight Deck Security Door

1.30.9 - Added text and graphics which describe the Flight Deck Security Door.

Section 40 - Systems Description

Emergency Exit Lighting

1.40.9 - Added a graphic which depicts the photoluminescent floor lighting.

Copyright © The Boeing Company. See title page for details.

Portable Protective Breathing Equipment

1.40.13 - Revised the time available when using portable protective breathing equipment. Some manufacturers produce a device which will operate for over 20 minutes.

Emergency Equipment Symbols

1.40.19 - Added a symbol for the AED to the Emergency Equipment Location graphic.

Flight Deck Security Door

1.40.23 - Added text and graphics describing the new Flight Deck Enhanced Security Door.

Chapter 2 - Air Systems

Section 40 - Pressurization System Description

Auto Mode Operation

2.40.6 - Revised description of AUTO FAIL light operation.

Chapter 3 - Anti-Ice, Rain

Section 20 - System Description

Probe and Sensor Heat

3.20.5 - Added note to clarify operation of pitot probe for standby airspeed.

Chapter 4 - Automatic Flight

Section 10 - Controls and Indicators

Vertical Navigation

4.10.6 - Added FMC Update U10.3.

Lateral Navigation

4.10.12 - Added flight control computer -708 or later.

Section 20 - System Description

Autopilot Disengagement

4.20.2 - Added flight control computer -708 or later.

AFDS Flight Mode Annunciations

4.20.5 - Added flight control computer -708 or later.

Automatic Flight Takeoff and Climb

4.20.10 - Deleted automatic takeoff thrust reduction option.

Copyright © The Boeing Company. See title page for details.

Automatic Flight Approach and Landing

4.20.15 - Revised description of ILS deviation monitoring system.

Go–Around

4.20.19-20 - Added flight control computer -708 or later.

Reversion Modes

4.20.27 - Amended description of minimum speed reversion.

Chapter 6 - Electrical

Section 10 - Controls and Indicators

AC and DC Metering Panel

6.10.4 - Revised information about the equipment controlled by the CAB/UTIL Switch.

6.10.4 - Revised information about the equipment controlled by the CAB/UTIL and IFE/PASS SEAT switches.

Section 20 - System Description

DC Voltmeter and Ammeter

6.20.9 - Revised paragraph to include voltage indications during the primary charge cycle.

Chapter 7 - Engines, APU

Section 20 - Engine System Description

Electronic Engine Control (EEC)

7.20.4 - Revised description of EEC modes of operation for clarity.

EEC Normal Mode

7.20.5 - Revised description of takeoff bump thrust.

Chapter 8 - Fire Protection

Section 10 - Controls and Indicators

APU Ground Control Panel

8.10.7 - Corrected description of switch operation.

Copyright © The Boeing Company. See title page for details.

Chapter 9 - Flight Controls

Section 10 - Controls and Indicators

Flight Control Panel

9.10.1 - Revised Flight Control Panel illustration and description to provide additional information on the FLT CONTROL Switches and STANDBY HYD Lights.

9.10.2 - Added Flight Control Panel illustration and description to reflect the addition of the STBY RUD ON Light.

9.10.3 - Added description of the STBY RUD ON Light.

Section 20 - System Description

Rudder

9.20.12 - Corrected grammatical error in text.

9.20.12 - Revised text to clarify rudder system operation.

9.20.12 - Added description of 737 modified rudder system.

9.20.12 - Revised text to clarify the operation of the standby rudder PCU system.

Yaw Damper

9.20.14 - Added description of Yaw Damper system with 737 modified rudder installed.

Yaw Control Schematic

9.20.15 - Added Yaw Control Schematic for 737 modified rudder system.

In-Flight Operation

9.20.16 - Revised text to be consistent with text in the Limitations Chapter L, Section 10.

Autoslats

9.20.20 - Revised information about Autoslat system operation for airplanes with winglets.

Chapter 10 - Flight Instruments, Displays

Section 10 - EFIS/Map – Controls and Indicators

Mach/Airspeed Indicator – General

10.10.8 - Added Flaps 30 Upper amber band logic due to software upgrade.

Attitude Indicator – LNAV/VNAV Deviation Indicators

10.10.15 - Added LNAV/VNAV deviation EFIS option.

Copyright © The Boeing Company. See title page for details.

Section 11 - PFD/ND – Displays

PFD Airspeed Indications – General

10.11.6 - Deleted FMC update 10.2 or 10.2A.

PFD Airspeed Indications – Takeoff and Approach

10.11.10 - Added Flaps 30 Upper amber band logic due to software upgrade.

PFD LNAV/VNAV Deviation Indications

10.11.14 - Added LNAV/VNAV deviation PFD option.

Section 15 - EFIS Instruments – Controls and Indicators

Standby Flight Instruments

10.15.10 - Added integrated standby flight display.

Integrated Standby Flight Display

10.15.11,13 - Added integrated standby flight display.

Section 16 - EFIS Instruments (PFD) – Controls

Standby Flight Instruments

10.16.10 - Added integrated standby flight display.

Integrated Standby Flight Display

10.16.11,13 - Added integrated standby flight display.

Section 20 - EFIS/Map System Description

Standby Flight Instruments

10.20.13 - Added integrated standby flight display.

Integrated Standby Flight Display (ISFD)

10.20.14 - Added integrated standby flight display.

Section 21 - PFD/ND System Description

Standby Flight Instruments

10.21.14 - Added integrated standby flight display.

Integrated Standby Flight Display (ISFD)

10.21.14 - Added integrated standby flight display.

Section 41 - PFD/ND Navigation Displays

Map

10.41.8 - Added LNAV/VNAV deviation MAP symbols.

Copyright © The Boeing Company. See title page for details.

Chapter 11 - Flight Management, Navigation

Section 20 - Navigation Systems Description

Marker Beacon

11.20.10 - Deleted the term "airway"

Section 31 - Flight Management System Operation

Navigation Performance

11.31.7 - Combined RNP paragraphs for clarity.

11.31.7 - Added FMC Update U10.5 or later.

11.31.7 - Deleted FMC Update U10.0.

Actual Navigation Performance

11.31.8-9 - Added new ANP graphic with GPS.

Descent

11.31.33 - Changed "PATH" to "path (VNAV PTH)".

11.31.33 - Changed "SPEED" to "speed".

Early Descent

11.31.33 - Repositioned "1000 fpm".

Approach

11.31.34 - Changed title to read "Approach".

11.31.34 - Added "on approach" information.

11.31.35 - Revised text for clarity.

Go-Around

11.31.35 - Added additional information to Go-Around section.

Section 32 - Flight Management Computer

Thrust Management

11.32.3 - Deleted automatic takeoff thrust reduction option.

11.32.3 - Revised thrust reduction altitude.

11.32.3 - Added FMC Update U10.3.

Reduced Thrust Takeoff

11.32.4 - Deleted FMC Update U10.0.

Loss of FMC Electrical Power

11.32.5 - Changed MOD RTE LEGS to RTE LEGS.

Copyright © The Boeing Company. See title page for details.

Section 40 - FMC Preflight

Preflight Page Sequence

11.40.1 - Deleted FMC Update U10.0.

Identification Page

11.40.7 - Added -900 to model list.

11.40.8 - Added FMC Update U10.4A.

11.40.8 - Added FMC Update U10.5.

11.40.8 - Added engine thrust designations.

Route Page 1/X

11.40.14 - Added FMC Update U10.3.

11.40.14 - Added option for flight crew entry of flight number via CDU.

11.40.18 - Added Flight Number Entry option.

Performance Initialization Page

11.40.27 - Deleted FMC Update U10.0.

11.40.28 - Added FMC U10.1 or later with plan fuel option.

N1 LIMIT Page - Preflight

11.40.39-40 - Added CLB thrust statement.

Takeoff Reference Page 1/2

11.40.43,47,54 - Deleted FMC Update U10.0.

11.40.50 - Added assumed temperature to QRH definition.

Takeoff Reference Page 2/2

11.40.61 - Added FMC Update U10.3.

11.40.61 - Revised thrust reduction altitude.

Section 41 - FMC Takeoff and Climb

Arrivals Page

11.41.37 - Added section reference for additional information.

Section 42 - FMC Cruise

Progress Page

11.42.4 - Changed page number to read 1/X.

Reference Navigation Data (REF NAV DATA) Page

11.42.41 - Added waypoint identifier information.

11.42.41 - Added airport identifier information.

Copyright © The Boeing Company. See title page for details.

11.42.42 - Added navaid identifier information.

Navigation Options (NAV OPTIONS)

11.42.53 - Expanded text on VOR/DME inhibit function.

Fix Information Page

11.42.54 - Added FMC Update U10.5 or later.

Section 43 - FMC Descent and Approach

Descent Forecast Page

11.43.11-12 - Added AOC datalink option.

11.43.12 - Added informational note for TAI.

11.43.12 - Added ACARS note.

Added AOC datalink option.

Approach Reference Page

11.43.21,23 - Revised callout label to read Approach Information.

11.43.24 - Changed line select key to 4L.

11.43.24 - Added Flap/Speed formatting information.

11.43.24 - Added FMC Update U10.5.

HOLD Page

11.43.32 - Revised text next to HOLD button to read "does not exist".

11.43.34 - Added FMC Update U10.4 or later.

11.43.35 - Revised NEXT HOLD description.

Section 60 - FMC Messages

FMC Alerting Messages

11.60.2 - Added FMC Update U10.4 or later CDU messages.

11.60.2,7,9 - Added FMC Update U10.5 or later CDU messages.

11.60.4,6 - Added Integrated Approach Navigation CDU message.

FMC Advisory Messages

11.60.13 - Added GLS information.

11.60.13 - Added FMC Update U10.4 and U10.5 CDU messages.

11.60.16 - Added FMC Update U10.5 or later CDU messages.

Copyright © The Boeing Company. See title page for details.

Chapter 12 - Fuel

Section 10 - Controls and Indicators

Fuel Alert Indications

12.10.5 - Added kilogram measurement to the Fuel Alert Indications section.

Chapter 13 - Hydraulics

Section 10 - Controls and Indicators

Flight Control Panel

13.10.5 - Added Flight Control Panel illustration and information for the STBY RUD ON Light for the 737 modified rudder system.

Section 20 - System Description

A and B Hydraulic System Pumps

13.20.3 - Changed "electric hydraulic pump" to "electric motor-drive hydraulic pump" for Operations Manual standardization.

Standby Hydraulic System

13.20.5 - Revised Standby Hydraulic System description to provide information about the 737 modified rudder system.

Standby Hydraulic System Schematic

13.20.7 - Added graphic to incorporate 737 modified rudder system.

Chapter NC - Normal Checklists

NC.1 - Added head-up display information.

Chapter PI - Performance Inflight

Section 10 - General

Takeoff Speeds - Dry Runway

PI.10.1 - Reran V1mcg data for A/C off and expanded table coverage to 10000 ft.

Takeoff Speeds - Wet Runway

PI.10.2 - Reran V1mcg data for A/C off and expanded table coverage to 10000 ft.

Takeoff %N1

PI.10.7 - Revised Takeoff %N1 table for consistent coverage of Outside Air Temperature (OAT).

Copyright © The Boeing Company. See title page for details.

Assumed Temperature Reduced Thrust

PI.10.8 - Extended coverage up to 10000 ft pressure altitude, and revised Max Assumed Temperature to match AFM-DPI limit of ISA+56°C.

Takeoff Speeds - Dry Runway (20K Derate)

PI.10.10 - Reran V1mcg data for A/C off and expanded table coverage to 10000 ft.

Takeoff Speeds - Wet Runway (20K Derate)

PI.10.11 - Reran V1mcg data for A/C off and expanded table coverage to 10000 ft.

Takeoff %N1 (20K Derate)

PI.10.15 - Revised Takeoff %N1 table for consistent coverage of Outside Air Temperature (OAT). Extended coverage of Airport Pressure Altitude up to 10000 ft.

Assumed Temperature Reduced Thrust (20K Derate)

PI.10.16 - Extended coverage up to 10000 ft pressure altitude, and revised Max Assumed Temperature to match AFM-DPI limit of ISA+56°C.

Takeoff Speeds - Dry Runway (18.5K Derate)

PI.10.18 - Reran V1mcg data for A/C off and expanded table coverage to 10000 ft.

Takeoff Speeds - Wet Runway (18.5K Derate)

PI.10.19 - Reran V1mcg data for A/C off and expanded table coverage to 10000 ft.

Takeoff %N1 (18.5K Derate)

PI.10.23 - Revised Takeof %N1 table for consistent coverage of Outside Air Temperature (OAT).

Section 12 - Advisory Information

Slippery Runway Landing Distance

PI.12.1 - Removed 15% factor from dry runway landing distances.

PI.12.1 - Removed 15% factor from dry runway landing distance adjustments.

Brake Cooling Schedule

PI.12.7 - Removed advice for overheat after takeoff, which requires BTMS to be detected.

Copyright © The Boeing Company. See title page for details.

Section 16 - Text

Alternate Mode EEC

PI.16.11 - Revised wording of Alternate Mode EEC paragraphs to reflect termonology used in respective Operations Manual System Description. Changed PRIMARY Mode to normal mode (ON EEC switch illuminated), ALTERNATE to alternate (ALTN EEC switch illuminated).

Section 20 - General

Takeoff %N1

PI.20.11 - Revised Takeoff %N1 table for consistent coverage of Outside Air Temperature (OAT). Extended coverage of Airport Pressure Altitude up to 10000 ft.

PI.20.11 - Amended Engine Bleed %N1 Adjustment for -1000 ft pressure altitude.

Assumed Temperature Reduced Thrust

PI.20.12 - Extended coverage up to 10000 ft pressure altitude, and revised Max Assumed Temperature to match AFM-DPI limit of ISA+56°C.

Takeoff %N1 (22K Derate)

PI.20.20 - Revised Takeoff %N1 table for consistent coverage of Outside Air Temperature (OAT).

Assumed Temperature Reduced Thrust (22K Derate)

PI.20.21 - Extended coverage up to 10000 ft pressure altitude, and revised Max Assumed Temperature to match AFM-DPI limit of ISA+56°C.

Takeoff %N1 (20K Derate)

PI.20.28 - Revised Takeoff %N1 table for consistent coverage of Outside Air Temperature (OAT). Extended coverage of Airport Pressure Altitude up to 10000 ft.

PI.20.28 - Amended Engine Bleed %N1 Adjustment for -1000 ft pressure altitude.

Assumed Temperature Reduced Thrust (20K Derate)

PI.20.29 - Extended coverage up to 10000 ft pressure altitude, and revised Max Assumed Temperature to match AFM-DPI limit of ISA+56°C.

Copyright © The Boeing Company. See title page for details.

Section 26 - Text

Alternate Mode EEC

PI.26.11 - Revised wording of Alternate Mode EEC paragraphs to reflect termonology used in respective Operations Manual System Description. Changed PRIMARY Mode to normal mode (ON EEC switch illuminated), ALTERNATE to alternate (ALTN EEC switch illuminated).

Section 30 - General

Takeoff %N1

PI.30.7 - Revised Takeoff %N1 table for consistent coverage of Outside Air Temperature (OAT). Extended coverage of Airport Pressure Altitude up to 10000 ft. Amended Engine Bleed %N1 Adjustment for -1000 ft pressure altitude.

Assumed Temperature Reduced Thrust

PI.30.8 - Revised Max Assumed Temperature to match AFM-DPI limit of ISA+56°C.

Takeoff %N1 (24K Derate)

PI.30.16 - Revised Takeoff %N1 table for consistent coverage of Outside Air Temperature (OAT). Extended coverage of Airport Pressure Altitude up to 10000 ft. Amended Engine Bleed %N1 Adjustment for -1000 ft pressure altitude.

Assumed Temperature Reduced Thrust (24K Derate)

PI.30.17 - Extended coverage up to 10000 ft pressure altitude, and revised Max assumed Temperature to match AFM-DPI limit of ISA+56°C.

Takeoff %N1 (22K Derate)

PI.30.24 - Revised Takeoff %N1 table for consistent coverage of Outside Air Temperature (OAT). Extended coverage of Airport Pressure Altitude up to 10000 ft. Amended Engine Bleed %N1 Adjustment for -1000 ft pressure altitude.

Assumed Temperature Reduced Thrust (22K Derate)

PI.30.25 - Extended coverage up to 10000 ft pressure altitude, and revised Max Assumed Temperature to match AFM-DPI limit of ISA+56°C.

Section 34 - Alternate Mode EEC

Alternate Mode EEC Limit Weight

PI.34.1 - Revised labeling of Alternate Mode EEC Limit Weight table to eflect termonology used in respective Operations Manual System Description. Changed PRIMARY to NORMAL.

Copyright © The Boeing Company. See title page for details.

Section 37 - Text

Alternate Mode EEC

PI.37.11 - Revised wording of Alternate Mode EEC paragraphs to reflect termonology used in respective Operations Manual System Description. Changed PRIMARY Mode to normal mode (ON EEC switch illuminated), ALTERNATE to alternate (ALTN EEC switch illuminated).

Section 40 - General

PI.40.1 - Section PI-900-26-LB-FAA-Sec40 added.

Takeoff %N1

PI.40.8 - Corrected %N1 Adjustment for engine bleed configuration packs off at -1000 ft.

Assumed Temperature Reduced Thrust

PI.40.9 - Revised Max Assumed Temperature to match AFM-DPI limit of ISA+56°C.

PI.40.9 - Added missing row for Minimum Assumed Temperature.

Assumed Temperature Reduced Thrust (24K Derate)

PI.40.18 - Added missing Minimum Assumed Temp °C row.

Section 41 - All Engine

PI.41.1 - Section PI-900-26-LB-FAA-Sec41 added.

Section 42 - Advisory Information

PI.42.1 - Section PI-900-26-LB-FAA-Sec42 added.

Section 43 - Engine Inoperative

PI.43.1 - Section PI-900-26-LB-FAA-Sec43 added.

Section 44 - Alternate Mode EEC

PI.44.1 - Section PI-900-26-LB-FAA-Sec44 added.

Alternate Mode EEC Limit Weight (1000 LB)

PI.44.1 - Revised labeling of Alternate Mode EEC Limit Weight table to eflect termonology used in respective Operations Manual System Description. Changed PRIMARY to NORMAL.

Section 45 - Gear Down

PI.45.1 - Section PI-900-26-LB-FAA-Sec45 added.

Section 46 - Gear Down, Engine Inop

PI.46.1 - Section PI-900-26-LB-FAA-Sec46 added.

Copyright © The Boeing Company. See title page for details.

Section 47 - Text

PI.47.1 - Section PI-900-26-LB-FAA-Sec47 added.

Alternate Mode EEC

PI.47.11 - Revised wording of Alternate Mode EEC paragraphs to reflect termonology used in respective Operations Manual System Description. Changed PRIMARY Mode to normal mode (ON EEC switch illuminated), ALTERNATE to alternate (ALTN EEC switch illuminated).

Chapter NNC - Non-Normal Checklists

Section 0 - Unannunciated Checklists

ELEVATOR TAB LIMIT CYCLE OSCILLATION

NNC.0.14 - Incorporated Airworthiness Directive 2002-08-20.

JAMMED OR RESTRICTED ELEVATOR OR AILERON

NNC.0.21 - Indented steps to improve procedural logic.

NNC.0.21 - Added a note clarifying that when VREF ICE is required, the wind correction should not exceed 10 knots.

JAMMED STABILIZER

NNC.0.24 - Added a note clarifying that when VREF ICE is required, the wind correction should not exceed 10 knots.

PASSENGER EVACUATION

NNC.0.28 - Added the word "engine" for nomenclature standardization.

SMOKE/FUMES REMOVAL

NNC.0.30 - Changed checklist from a recall to a reference only checklist to be consistent with other Boeing models that have the same checklist.

Section 1 - Airplane General, Emergency Equipment, Doors, Windows

ELT

NNC.1.2 - Added checklist for airplanes equipped with an emergency locator transmitter control panel.

Section 2 - Air Systems

BLEED TRIP OFF

NNC.2.4 - Inappropriate use of wing TAI may cause dual bleed trip off incidents. As a result, added a step to turn the wing anti-ice off.

Section 6 - Electrical

TR UNIT

NNC.6.6 - Transposed procedures to match proper index order.

Copyright © The Boeing Company. See title page for details.

TRANSFER BUS OFF

NNC.6.6 - Transposed procedures to match proper index order.

Section 7 - Engines, APU

ONE ENGINE INOPERATIVE LANDING

NNC.7.22 - Added a note clarifying that when VREF ICE is required, the wind correction should not exceed 10 knots.

Section 8 - Fire Protection

SMOKE/FUMES REMOVAL

NNC.8.10 - Changed checklist from a recall to a reference only checklist to be consistent with other Boeing models that have the same checklist.

Section 9 - Flight Controls

ALTERNATE FLAPS OPERATION

NNC.9.4 - Added a note clarifying that when VREF ICE is required, the wind correction should not exceed 10 knots.

NNC.9.4 - Changed to clarify system operation.

NNC.9.4 - Added a Descent and Approach checklist for consistency with other 737 NNC's.

ASYMMETRICAL TRAILING EDGE FLAPS

NNC.9.8 - Added a note clarifying that when VREF ICE is required, the wind correction should not exceed 10 knots.

ELEVATOR TAB LIMIT CYCLE OSCILLATION

NNC.9.10 - Incorporated Airworthiness Directive 2002-08-20.

JAMMED OR RESTRICTED ELEVATOR OR AILERON

NNC.9.13 - Indented steps to improve procedural logic.

NNC.9.13 - Added a note clarifying that when VREF ICE is required, the wind correction should not exceed 10 knots.

JAMMED STABILIZER

NNC.9.16 - Added a note clarifying that when VREF ICE is required, the wind correction should not exceed 10 knots.

YAW DAMPER

NNC.9.25 - The FCTM includes the note "With yaw damper inoperative, do not exceed flaps 30 if crosswinds exceed 30 knots." This limitation is now included in the YAW DAMPER Non-Normal checklist.

Copyright © The Boeing Company. See title page for details.

Section 11 - Flight Management, Navigation

GPS

NNC.11.3 - Expanded the GPS NNC to advise the flight crew that terrain alerting and associated display will be lost in the event of dual sensor failure.

Section 13 - Hydraulics

LOSS OF SYSTEM B

NNC.13.4 - Added a note clarifying that when VREF ICE is required, the wind correction should not exceed 10 knots.

NNC.13.4 - Changed to clarify system operation.

MANUAL REVERSION

NNC.13.7 - Added a note clarifying that when VREF ICE is required, the wind correction should not exceed 10 knots.

NNC.13.7 - Changed to clarify system operation.

Chapter NNM - Non-Normal Maneuvers

Section 2 - Flight Patterns

Visual Traffic Pattern

NNM.2.6 - Changed for standardization between the OM and FCTM.

Copyright © The Boeing Company. See title page for details.

Page	Date
Volume 1	
* Title Page	September 30, 2002
Copyright	
0.0.1-2	March 15, 2002
* 0.1.1	September 30, 2002
0.1.2	August 30, 2000
0.2.1-3	August 30, 2000
0.2.4	October 15, 2001
0.2.5-6	August 30, 2000
* 0.3.1-6	September 30, 2002
* 0.4.1-20	September 30, 2002
* 0.5.1-12	September 30, 2002
Bulletins (tab)	
* 0.6.1-4	September 30, 2002
Limitations (tab)	
* L.TOC.0.1-2	September 30, 2002
* L.10.1-10	September 30, 2002

Page	Date
Normal Procedures (tab)	
* NP.TOC.0.1-2	September 30, 2002
NP.10.1	March 15, 2002
NP.10.2-4	August 30, 2000
NP.10.5	June 06, 2001
NP.10.6	August 30, 2000
NP.20.1-6	August 30, 2000
NP.20.7	June 06, 2001
NP.20.8-9	August 30, 2000
* NP.20.10-12	September 30, 2002
NP.20.13	June 06, 2001
* NP.20.14-42	September 30, 2002
* NP.20.43-44	Deleted
NP.30.1-2	August 30, 2000
NP.30.3-5	March 15, 2002
* NP.30.6	September 30, 2002

* = Revised, Added, or Deleted

Copyright © The Boeing Company. See title page for details.

DO NOT USE FOR FLIGHT

Page	Date
Supplementary Procedures (tab)	
* SP.TOC.0.1-8	September 30, 2002
SP.05.1-2	August 30, 2000
SP.1.1-5	March 15, 2002
SP.1.6	June 06, 2001
SP.2.1-8	August 30, 2000
SP.3.1-2	August 30, 2000
SP.4.1-3	March 15, 2002
* SP.4.4-7	September 30, 2002
SP.4.8	March 15, 2002
SP.5.1-2	March 15, 2002
* SP.6.1	September 30, 2002
SP.6.2	October 15, 2001
SP.6.3-4	August 30, 2000
* SP.7.1	September 30, 2002
SP.7.2-4	August 30, 2000
SP.7.5	June 06, 2001
SP.7.6	August 30, 2000
SP.8.1-2	August 30, 2000
* SP.9.1-4	September 30, 2002
SP.10.1	June 06, 2001
SP.10.2	October 15, 2001
SP.10.3-4	March 15, 2002
SP.10.5-7	June 06, 2001
* SP.10.8	September 30, 2002
SP.10.9-10	June 06, 2001
* SP.11.1-15	September 30, 2002
SP.11.16-22	March 15, 2002
SP.12.1	March 15, 2002

Page	Date
Supplementary Procedures (cont)	
SP.12.2-4	August 30, 2000
* SP.16.1	September 30, 2002
SP.16.2-3	June 06, 2001
SP.16.4-5	August 30, 2000
* SP.16.6-16	September 30, 2002
Performance - Dispatch (tab)	
* PD.TOC.0.1-4	September 30, 2002
PD.10.1-8	March 15, 2002
PD.11.1-10	March 15, 2002
PD.12.1-4	March 15, 2002
PD.13.1-2	March 15, 2002
* PD.13.3	September 30, 2002
PD.13.4	March 15, 2002
* PD.13.5	September 30, 2002
PD.13.6	March 15, 2002
PD.20.1-2	March 15, 2002
* PD.20.3-4	September 30, 2002
PD.20.5-8	March 15, 2002
PD.21.1	March 15, 2002
* PD.21.2-3	September 30, 2002
PD.21.4-10	March 15, 2002
PD.22.1-4	March 15, 2002
PD.23.1-2	March 15, 2002
* PD.23.3	September 30, 2002
PD.23.4-6	March 15, 2002
PD.30.1-8	March 15, 2002
PD.31.1-10	March 15, 2002
PD.32.1-4	March 15, 2002
PD.33.1-2	March 15, 2002
* PD.33.3	September 30, 2002

* = Revised, Added, or Deleted

Copyright © The Boeing Company. See title page for details.

Page	Date
Performance - Dispatch (cont)	
PD.33.4-6	March 15, 2002
* PD.40.1-12	September 30, 2002
* PD.41.1-10	September 30, 2002
* PD.42.1-4	September 30, 2002
* PD.43.1-6	September 30, 2002
(blank tab)	

* = Revised, Added, or Deleted

Copyright © The Boeing Company. See title page for details.

Page	Date
Volume 2	
1 Airplane General, Emergency Equipment, Doors, Windows (tab)	
* 1.TOC.0.1-4	September 30, 2002
1.10.1-4	June 06, 2001
1.20.1	August 30, 2000
* 1.20.2	September 30, 2002
1.20.3-20	March 15, 2002
1.30.1-4	June 06, 2001
* 1.30.5	September 30, 2002
1.30.6-7	June 06, 2001
* 1.30.8-22	September 30, 2002
1.40.1-5	March 15, 2002
* 1.40.6-40	September 30, 2002
2 Air Systems (tab)	
* 2.TOC.0.1-4	September 30, 2002
2.10.1	August 30, 2000
* 2.10.2-4	September 30, 2002
2.10.5-6	August 30, 2000
2.10.7	October 15, 2001
* 2.10.8-16	September 30, 2002
2.20.1-2	June 06, 2001
2.20.3-6	August 30, 2000
2.30.1-2	June 06, 2001
2.30.3-6	August 30, 2000
2.31.1-2	June 06, 2001
2.31.3-4	August 30, 2000
2.31.5-6	June 06, 2001
2.31.7-8	August 30, 2000
2.40.1-2	August 30, 2000
* 2.40.3-8	September 30, 2002

Page	Date
3 Anti-Ice, Rain (tab)	
* 3.TOC.0.1-2	September 30, 2002
3.10.1-8	August 30, 2000
3.20.1	August 30, 2000
3.20.2	March 15, 2002
3.20.3-4	August 30, 2000
* 3.20.5-6	September 30, 2002
3.20.7	October 15, 2001
3.20.8	August 30, 2000
4 Automatic Flight (tab)	
* 4.TOC.0.1-2	September 30, 2002
4.10.1-3	August 30, 2000
4.10.4	March 15, 2002
4.10.5	August 30, 2000
* 4.10.6-7	September 30, 2002
4.10.8	March 15, 2002
4.10.9-11	August 30, 2000
* 4.10.12-13	September 30, 2002
4.10.14-18	June 06, 2001
4.10.19-20	August 30, 2000
4.10.21	June 06, 2001
4.10.22-23	March 15, 2002
4.10.24-26	August 30, 2000
4.20.1	August 30, 2000
* 4.20.2-3	September 30, 2002
4.20.4	August 30, 2000
* 4.20.5-28	September 30, 2002

* = Revised, Added, or Deleted

Copyright © The Boeing Company. See title page for details.

Page	Date
5 Communications (tab)	
* 5.TOC.0.1-2	September 30, 2002
5.10.1-3	August 30, 2000
5.10.4	June 06, 2001
* 5.10.5	September 30, 2002
5.10.6-9	August 30, 2000
5.10.10-13	June 06, 2001
* 5.10.14	September 30, 2002
5.20.1-4	August 30, 2000
5.20.5	March 15, 2002
5.20.6	June 06, 2001
6 Electrical (tab)	
* 6.TOC.0.1-2	September 30, 2002
* 6.10.1-2	September 30, 2002
6.10.3	August 30, 2000
* 6.10.4-10	September 30, 2002
6.20.1	June 06, 2001
6.20.2-5	August 30, 2000
* 6.20.6	September 30, 2002
6.20.7	August 30, 2000
* 6.20.8-9	September 30, 2002
6.20.10	August 30, 2000
6.20.11	March 15, 2002
6.20.12	June 06, 2001
6.20.13-15	August 30, 2000
6.20.16-17	March 15, 2002
6.20.18-19	August 30, 2000
6.20.20	October 15, 2001
* 6.20.21-22	September 30, 2002
6.20.23-24	August 30, 2000

Page	Date
7 Engines, APU (tab)	
* 7.TOC.0.1-4	September 30, 2002
7.10.1-14	August 30, 2000
7.11.1-16	August 30, 2000
7.15.1-8	August 30, 2000
7.20.1-3	August 30, 2000
* 7.20.4-16	September 30, 2002
7.30.1-4	August 30, 2000
8 Fire Protection (tab)	
* 8.TOC.0.1-2	September 30, 2002
8.10.1-5	August 30, 2000
8.10.6	June 06, 2001
* 8.10.7	September 30, 2002
8.10.8-9	June 06, 2001
8.10.10	August 30, 2000
8.20.1-8	August 30, 2000
9 Flight Controls (tab)	
* 9.TOC.0.1-2	September 30, 2002
* 9.10.1-16	September 30, 2002
9.20.1	August 30, 2000
9.20.2	June 06, 2001
9.20.3	October 15, 2001
9.20.4-11	June 06, 2001
* 9.20.12-24	September 30, 2002
10 Flight Instruments, Displays (tab)	
* 10.TOC.0.1-10	September 30, 2002
* 10.10.1	September 30, 2002
10.10.2-5	March 15, 2002
* 10.10.6-8	September 30, 2002
10.10.9-13	March 15, 2002
* 10.10.14-52	September 30, 2002

* = Revised, Added, or Deleted

Copyright © The Boeing Company. See title page for details.

Page	Date
10 Flight Instruments, Displays (cont)	
* 10.11.1	September 30, 2002
10.11.2-5	March 15, 2002
* 10.11.6-7	September 30, 2002
10.11.8-9	March 15, 2002
* 10.11.10	September 30, 2002
10.11.11-13	March 15, 2002
* 10.11.14-52	September 30, 2002
10.12.1-12	August 30, 2000
10.15.1-4	August 30, 2000
10.15.5	March 15, 2002
10.15.6	August 30, 2000
10.15.7-9	March 15, 2002
* 10.15.10-20	September 30, 2002
10.16.1	March 15, 2002
10.16.2-4	August 30, 2000
10.16.5-9	March 15, 2002
* 10.16.10-20	September 30, 2002
10.17.1-6	August 30, 2000
10.20.1	August 30, 2000
10.20.2	March 15, 2002
10.20.3-12	August 30, 2000
* 10.20.13-15	September 30, 2002
10.20.16	August 30, 2000
10.21.1	August 30, 2000
10.21.2	March 15, 2002
10.21.3-12	August 30, 2000
* 10.21.13-16	September 30, 2002
10.22.1	August 30, 2000
10.22.2-3	October 15, 2001
10.22.4-6	August 30, 2000

Page	Date
10 Flight Instruments, Displays (cont)	
10.30.1	June 06, 2001
10.30.2	October 15, 2001
10.30.3-4	June 06, 2001
10.31.1-5	March 15, 2002
10.31.6	August 30, 2000
10.40.1-4	August 30, 2000
10.40.5-6	October 15, 2001
10.40.7-8	August 30, 2000
10.40.9	October 15, 2001
10.40.10-11	August 30, 2000
10.40.12	October 15, 2001
10.40.13-17	August 30, 2000
10.40.18	June 06, 2001
10.40.19-20	August 30, 2000
10.41.1-6	August 30, 2000
10.41.7	October 15, 2001
* 10.41.8	September 30, 2002
10.41.9	October 15, 2001
10.41.10	August 30, 2000
* 10.41.11-18	September 30, 2002
10.42.1-2	October 15, 2001
10.42.3-10	August 30, 2000
10.42.11	October 15, 2001
10.42.12-18	August 30, 2000
11 Flight Management, Navigation (tab)	
* 11.TOC.0.1-8	September 30, 2002
11.10.1	August 30, 2000
11.10.2-8	October 15, 2001
* 11.10.9-30	September 30, 2002
11.20.1-7	October 15, 2001

* = Revised, Added, or Deleted

Copyright © The Boeing Company. See title page for details.

Page	Date
11 Flight Management, Navigation (cont)	
11.20.8-9	March 15, 2002
* 11.20.10	September 30, 2002
11.20.11	March 15, 2002
11.20.12	October 15, 2001
11.30.1	August 30, 2000
11.30.2-4	October 15, 2001
11.31.1-2	August 30, 2000
11.31.3-4	March 15, 2002
* 11.31.5-15	September 30, 2002
11.31.16-17	March 15, 2002
11.31.18	August 30, 2000
11.31.19-23	October 15, 2001
11.31.24	March 15, 2002
* 11.31.25-40	September 30, 2002
* 11.31.41-42	Deleted
11.32.1	August 30, 2000
11.32.2	October 15, 2001
* 11.32.3-8	September 30, 2002
11.33.1-3	August 30, 2000
11.33.4	October 15, 2001
11.33.5-6	August 30, 2000
* 11.33.7-8	September 30, 2002
11.33.9-11	March 15, 2002
11.33.12	October 15, 2001
* 11.40.1-3	September 30, 2002
11.40.4-6	March 15, 2002
* 11.40.7-8	September 30, 2002
11.40.9-13	March 15, 2002
* 11.40.14-66	September 30, 2002

Page	Date
11 Flight Management, Navigation (cont)	
* 11.40.67-72	Deleted
11.41.1	August 30, 2000
11.41.2-6	October 15, 2001
* 11.41.7	September 30, 2002
11.41.8-12	October 15, 2001
* 11.41.13-15	September 30, 2002
11.41.16-20	October 15, 2001
* 11.41.21-38	September 30, 2002
11.42.1-2	August 30, 2000
11.42.3	October 15, 2001
* 11.42.4	September 30, 2002
11.42.5-6	October 15, 2001
11.42.7	March 15, 2002
11.42.8-12	October 15, 2001
* 11.42.13-56	September 30, 2002
* 11.42.57-58	Deleted
11.43.1-3	October 15, 2001
* 11.43.4-5	September 30, 2002
11.43.6-7	October 15, 2001
* 11.43.8-9	September 30, 2002
11.43.10	October 15, 2001
* 11.43.11-12	September 30, 2002
11.43.13-19	October 15, 2001
* 11.43.20-24	September 30, 2002
11.43.25-31	October 15, 2001
* 11.43.32-40	September 30, 2002
* 11.43.41-44	Deleted
11.60.1	June 06, 2001
* 11.60.2-22	September 30, 2002

* = Revised, Added, or Deleted

Copyright © The Boeing Company. See title page for details.

Page	Date
12 Fuel (tab)	
* 12.TOC.0.1-2	September 30, 2002
12.10.1-2	August 30, 2000
12.10.3	June 06, 2001
12.10.4	October 15, 2001
* 12.10.5-6	September 30, 2002
12.10.7-8	August 30, 2000
12.10.9-10	June 06, 2001
12.20.1-3	March 15, 2002
12.20.4	August 30, 2000
13 Hydraulics (tab)	
* 13.TOC.0.1-2	September 30, 2002
13.10.1-3	August 30, 2000
* 13.10.4-6	September 30, 2002
13.20.1-2	August 30, 2000
* 13.20.3	September 30, 2002
13.20.4	August 30, 2000
* 13.20.5-8	September 30, 2002
14 Landing Gear (tab)	
* 14.TOC.0.1-2	September 30, 2002
14.10.1-7	August 30, 2000
14.10.8	March 15, 2002
14.20.1-2	August 30, 2000
14.20.3-4	October 15, 2001
14.20.5	August 30, 2000
14.20.6	June 06, 2001
14.20.7	March 15, 2002
14.20.8-10	June 06, 2001

Page	Date
15 Warning Systems (tab)	
* 15.TOC.0.1-2	September 30, 2002
15.10.1-3	August 30, 2000
* 15.10.4-5	September 30, 2002
15.10.6-9	August 30, 2000
* 15.10.10-14	September 30, 2002
15.20.1	August 30, 2000
15.20.2	March 15, 2002
* 15.20.3	September 30, 2002
15.20.4	June 06, 2001
15.20.5-6	August 30, 2000
15.20.7	October 15, 2001
15.20.8-12	August 30, 2000
15.20.13	October 15, 2001
15.20.14-20	March 15, 2002
15.20.21-24	June 06, 2001
(blank tab)	

* = Revised, Added, or Deleted

Copyright © The Boeing Company. See title page for details.

Page	Date
Quick Reference Handbook	
Normal Checklists	
* NC.1	September 30, 2002
NC.2	June 06, 2001
NC.3	August 30, 2000
* NC.4	September 30, 2002
Checklist Introduction (tab)	
* CI.TOC.0.1-2	September 30, 2002
CI.1.1-2	August 30, 2000
* CI.2.1	September 30, 2002
CI.2.2-3	March 15, 2002
* CI.2.4	September 30, 2002
Performance - Inflight (tab)	
* PI.TOC.0.1-10	September 30, 2002
* PI.10.1-2	September 30, 2002
PI.10.3-6	March 15, 2002
* PI.10.7-11	September 30, 2002
PI.10.12-14	March 15, 2002
* PI.10.15-19	September 30, 2002
PI.10.20-22	March 15, 2002
* PI.10.23-24	September 30, 2002
PI.10.25-30	March 15, 2002
PI.11.1-8	March 15, 2002
* PI.12.1	September 30, 2002
PI.12.2-6	March 15, 2002
* PI.12.7	September 30, 2002
PI.12.8	March 15, 2002
PI.13.1-10	March 15, 2002
PI.14.1-4	March 15, 2002
PI.15.1-4	March 15, 2002
PI.16.1-10	March 15, 2002

Page	Date
Performance - Inflight (cont)	
* PI.16.11	September 30, 2002
PI.16.12	March 15, 2002
PI.20.1-10	March 15, 2002
* PI.20.11-12	September 30, 2002
PI.20.13-19	March 15, 2002
* PI.20.20-21	September 30, 2002
PI.20.22-27	March 15, 2002
* PI.20.28-29	September 30, 2002
PI.20.30-34	March 15, 2002
PI.21.1-8	March 15, 2002
PI.22.1-8	March 15, 2002
PI.23.1-12	March 15, 2002
PI.24.1-6	March 15, 2002
PI.25.1-4	March 15, 2002
PI.26.1-10	March 15, 2002
* PI.26.11	September 30, 2002
PI.26.12	March 15, 2002
PI.30.1-6	March 15, 2002
* PI.30.7-30	September 30, 2002
PI.31.1-8	March 15, 2002
PI.32.1-8	March 15, 2002
PI.33.1-12	March 15, 2002
* PI.34.1	September 30, 2002
PI.34.2	March 15, 2002
PI.35.1-4	March 15, 2002
PI.36.1-4	March 15, 2002
PI.37.1-10	March 15, 2002
* PI.37.11-12	September 30, 2002
* PI.40.1-32	September 30, 2002
* PI.41.1-8	September 30, 2002

* = Revised, Added, or Deleted

Copyright © The Boeing Company. See title page for details.

DO NOT USE FOR FLIGHT

Page	Date
Performance - Inflight (cont)	
* PI.42.1-8	September 30, 2002
* PI.43.1-12	September 30, 2002
* PI.44.1-2	September 30, 2002
* PI.45.1-6	September 30, 2002
* PI.46.1-6	September 30, 2002
* PI.47.1-12	September 30, 2002
Non-Normal Checklists (tab)	
0 Unannunciated Checklists (tab)	
* NNC.TOC.0.1-2	September 30, 2002
NNC.0.1	August 30, 2000
NNC.0.2-6	June 06, 2001
NNC.0.7	March 15, 2002
NNC.0.8	June 06, 2001
NNC.0.9-10	October 15, 2001
NNC.0.11-12	June 06, 2001
* NNC.0.13-38	September 30, 2002
1 Airplane General, Emergency Equipment, Doors, Windows (tab)	
* NNC.TOC.1.1-2	September 30, 2002
NNC.1.1	March 15, 2002
* NNC.1.2	September 30, 2002
NNC.1.3	June 06, 2001
NNC.1.4	October 15, 2001
* NNC.1.5	September 30, 2002
NNC.1.6	June 06, 2001

Page	Date
2 Air Systems (tab)	
* NNC.TOC.2.1-2	September 30, 2002
NNC.2.1	June 06, 2001
NNC.2.2-3	March 15, 2002
* NNC.2.4	September 30, 2002
NNC.2.5-6	March 15, 2002
NNC.2.7-12	June 06, 2001
NNC.2.13-14	March 15, 2002
3 Anti-Ice, Rain (tab)	
* NNC.TOC.3.1-2	September 30, 2002
NNC.3.1	March 15, 2002
NNC.3.2-4	August 30, 2000
4 Automatic Flight (tab)	
NNC.TOC.4.1-2	August 30, 2000
NNC.4.1-2	August 30, 2000
5 Communications, Datalink (tab)	
NNC.TOC.5.1-2	August 30, 2000
NNC.5.1-2	August 30, 2000
6 Electrical (tab)	
* NNC.TOC.6.1-2	September 30, 2002
NNC.6.1-2	June 06, 2001
* NNC.6.3-4	September 30, 2002
NNC.6.5	March 15, 2002
* NNC.6.6	September 30, 2002
7 Engines, APU (tab)	
* NNC.TOC.7.1-2	September 30, 2002
NNC.7.1-2	August 30, 2000
NNC.7.3	June 06, 2001
NNC.7.4-21	March 15, 2002
* NNC.7.22	September 30, 2002
NNC.7.23-28	March 15, 2002

* = Revised, Added, or Deleted

Copyright © The Boeing Company. See title page for details.

Page	Date
8 Fire Protection (tab)	
* NNC.TOC.8.1-2	September 30, 2002
NNC.8.1-4	June 06, 2001
* NNC.8.5-7	September 30, 2002
NNC.8.8	March 15, 2002
NNC.8.9	June 06, 2001
* NNC.8.10	September 30, 2002
NNC.8.11-12	June 06, 2001
9 Flight Controls (tab)	
* NNC.TOC.9.1-2	September 30, 2002
NNC.9.1	June 06, 2001
* NNC.9.2-26	September 30, 2002
10 Flight Instruments, Displays (tab)	
* NNC.TOC.10.1-2	September 30, 2002
NNC.10.1	August 30, 2000
NNC.10.2-4	March 15, 2002
11 Flight Management, Navigation (tab)	
* NNC.TOC.11.1-2	September 30, 2002
NNC.11.1-2	June 06, 2001
* NNC.11.3	September 30, 2002
NNC.11.4	August 30, 2000
NNC.11.5	June 06, 2001
NNC.11.6	August 30, 2000
12 Fuel (tab)	
* NNC.TOC.12.1-2	September 30, 2002
NNC.12.1	May 10, 2001
NNC.12.2-6	March 15, 2002

Page	Date
13 Hydraulics (tab)	
* NNC.TOC.13.1-2	September 30, 2002
NNC.13.1	March 15, 2002
NNC.13.2	June 06, 2001
NNC.13.3	August 30, 2000
* NNC.13.4	September 30, 2002
NNC.13.5	August 30, 2000
* NNC.13.6-7	September 30, 2002
NNC.13.8-10	August 30, 2000
14 Landing Gear (tab)	
* NNC.TOC.14.1-2	September 30, 2002
NNC.14.1-2	June 06, 2001
NNC.14.3-4	August 30, 2000
NNC.14.5	June 06, 2001
NNC.14.6-9	August 30, 2000
NNC.14.10	June 06, 2001
15 Warning Systems, Tailstrike (tab)	
* NNC.TOC.15.1-2	September 30, 2002
NNC.15.1-2	June 06, 2001
Non-Normal Maneuvers (tab)	
* NNM.TOC.0.1-2	September 30, 2002
* NNM.1.1-12	September 30, 2002
* NNM.1.13-14	Deleted
NNM.2.1-2	August 30, 2000
NNM.2.3-5	March 15, 2002
* NNM.2.6	September 30, 2002
Index (tab)	
* NNC.Index.1-6	September 30, 2002
(blank tab)	

* = Revised, Added, or Deleted

Copyright © The Boeing Company. See title page for details.

Intentionally
Blank

Copyright © The Boeing Company. See title page for details.

General

The Boeing Company issues operations manual bulletins as required. Bulletins transmit temporary information which must be issued before the next formal revision to the operations manual or information of interest to all operators.

Bulletins are numbered sequentially for each operator. Each new bulletin is recorded in this record when received and filed as instructed. A bulletin may not apply to all airplane models. Each bulletin specifically identifies the airplane effectivity. When appropriate, the next formal operations manual revision will include an updated bulletin record page.

Temporary information is normally incorporated into the manual at the next formal revision. When the condition remains temporary after a bulletin incorporation, the temporary paragraphs are identified by a heading referencing the originating bulletin. When the temporary condition no longer exists, the bulletin is cancelled and the original manual content is restored.

Bulletin status is defined as follows:

- In Effect (IE) - the bulletin contains pertinent information not otherwise covered in the operations manual. The bulletin is recorded in this record and filed as instructed. The bulletin is active and should be retained in the manual.
- Incorporated (INC) - the bulletin material is incorporated into the manual pages. The bulletin remains in effect.
- Cancelled (CANC) - the bulletin is no longer in effect. File the bulletin as instructed and remove it from this section of the manual. The record page should be modified to indicate the CANC bulletin status.

The record below should be accomplished by the person revising the material.

Number	Subject	Ref. No. (CS3-)	Date	Status
TBC-3R1	Standby Power Test	2686	Nov 8, 1999	INC
TBC-5R1	Window Overheat	2691	Nov 15, 2000	IE
TBC-6	Possible Autopilot Low Frequency Pitch Oscillation During Flap Extension While in a Turn	2712	Jan 29, 1999	IE
TBC-7	Engine Overheat/Fire and APU Fire Detection	2702	Jan 29, 1999	IE

Copyright © The Boeing Company. See title page for details.

Number	Subject	Ref. No. (CS3-)	Date	Status
TBC-8R1	Uncommanded Engine Acceleration Due to an Engine Fuel Control Fault	2723	Dec 17, 1999	IE
TBC-9	APU DC Fuel Pump Operational Anomaly	2728	Jan 29, 1999	INC
TBC-10R1	Landing Altitude Display Anomaly	2736	Sep 10, 1999	IE
TBC-11R1	Collins ILS/GPS Multi-Mode Receiver (MMR) Failure	2737	Mar 26, 1999	IE
TBC-12R1	Inadvertent RTO Autobraking During Landing	2752	Sep 6, 1999	IE
TBC-13R1	Nuisance PWS Fail Annunciation	2765	Apr 23, 1999	IE
TBC-14	AFDS Performance Degradation with Radio Altimeter Failure	2776	Jan 29, 1999	IE
TBC-15	FMC Software Restart Anomaly	2777	Jan 29, 1999	IE
TBC-16R1	Improper Autothrottle Thrust Setting During Go-Around After Assumed Temperature Derated Takeoff	2796	Apr 16, 1999	IE
TBC-17R1	Control Wheel Microphone/Interphone Switch Anomaly	2791	Nov 6, 2000	IE
TBC-18R2	Nuisance Zone Temp Light Illuminations on 737-800 Airplanes	2807	Nov 1, 2001	IE
TBC-19	737-600/-700/-800 Elevator Tab Operational Limitations	2819	Jun 10, 1999	IE
TBC-20	VHF Radio Use for ATC Ground Operations	2893	Apr 17, 2000	INC
TBC-21	GPWS Minimums Voice Callout Anomaly	2898	Apr 28, 2000	IE
TBC-22	TCAS Display Anomaly	2897	May 8, 2000	IE
TBC-23	Look-Ahead Terrain Alerting Display Anomalies	2864	May 17, 2000	IE

Copyright © The Boeing Company. See title page for details.

Number	Subject	Ref. No. (CS3-)	Date	Status
TBC-24	GPWS 2500 Foot Voice Callout Anomaly	2900	May 17, 2000	IE
TBC-27	PSEU Fault Indications	3002	Mar 17, 2001	INC
TBC-29	Emergency Airworthiness Directive 2001-12-51	3055	Jun 19, 2001	CANC
TBC-29R1	Emergency Airworthiness Directive 2002-08-52	3145	May 1, 2002	INC
TBC-30	Inflight Start EGT Display	3075	Sep 16, 2001	INC
TBC-31	Deployment of Speedbrake In Flight	3069	Jan 1, 2002	CANC
TBC-32	Deicing/Anti-icing Procedures	3126	Feb 15, 2002	IE
TBC-33	Airworthiness Directive 2002-08-20	3133	May 15, 2002	INC
TBC-34	FMC MAP Display Blanking with FMC Update U10.3, U10.4 and U10.4A software	3171	Aug 2, 2002	INC

Copyright © The Boeing Company. See title page for details.

Intentionally
Blank

Copyright © The Boeing Company. See title page for details.

Operations Manual Bulletin
for
The Boeing Company

The Boeing Company
Seattle, Washington 98124-2207

Number: TBC-3R1

Date: November 8, 1999

Document Effectivity: D6-27370-TBC

Subject: STANDBY POWER TEST

Reason: This is a reissue of TBC-3, dated January 29, 1999, which informed flight crews of an anomaly during a standby power test. The purpose of this reissue is to provide Service Bulletin information.

Information in this bulletin is recommended by The Boeing Company, but may not be FAA approved at the time of writing. In the event of conflict with the FAA approved Airplane Flight Manual (AFM), the AFM shall supersede. The Boeing Company regards the information or procedures described herein as having a direct or indirect bearing on the safe operation of this model airplane.

THE FOLLOWING PROCEDURE AND/OR INFORMATION IS EFFECTIVE UPON RECEIPT

Background Information

Flight test has revealed that when performing the standby power test, an anomaly in the stall management/yaw damper (-1SMYD) software may cause several faults to appear after the test is completed. These faults include:

- Captain's airspeed indicator VMO arc disappears
- SPD LIMIT flag (amber) displays on the mach airspeed indicator
- MACH TRIM light illuminates
- AUTO SLAT light illuminates
- ELEC light illuminates

These faults must be cleared by maintenance recycling the -1SMYD circuit breaker and/or clearing the fault in the Electrical Metering Panel prior to flight.

The condition will be fixed with the installation of -2SMYD or higher software. Component Service Bulletin 285A1010-27-01, released February 25, 1999, provides information on the upgrade to the -2SMYD software. Component Service Bulletin 285A1010-27-03, released February 25, 1999, provides information on the upgrade to the -4SMYD software. These Service Bulletins and this Operations Manual bulletin apply to to airplanes with manufacturer's line numbers 1 through 51.

Administrative Information

This bulletin replaces bulletin TBC-3, dated January 29, 1999. Discard bulletin TBC-3. Revise the Bulletin Record page to show TBC-3 as “Cancelled” (CANC).

Insert this bulletin behind the Operations Manual Bulletin Record page in Volume 1 of your Operations Manual. Amend the Operations Manual Bulletin Record to show bulletin TBC-3R1 “Incorporated” (INC).

Please send all correspondence regarding this Operations Manual Bulletin to one of the following addresses:

Mailing Address	Manager, Flight Technical Publications 737 Model Boeing Commercial Airplane Group P.O. Box 3707 MS 20-89 Seattle, WA 98124-2207 USA
Fax:	(206) 662-7812
Telex:	329430 Station 627
SITA:	SEABO7X Station 627

CS3-2686

Operations Manual Bulletin
for
The Boeing Company

The Boeing Company
Seattle, Washington 98124-2207

Number: TBC-5R1

Date: November 15, 2000

Document Effectivity: D6-27370-TBC

Subject: WINDOW OVERHEAT

Reason: This is a reissue of TBC-5 which informed flight crews of a window OVERHEAT light anomaly. The purpose of this reissue is to provide Service Bulletin information.

Information in this bulletin is recommended by The Boeing Company, but may not be FAA approved at the time of writing. In the event of conflict with the FAA approved Airplane Flight Manual (AFM), the AFM shall supersede. The Boeing Company regards the information or procedures described herein as having a direct or indirect bearing on the safe operation of this model airplane.

THE FOLLOWING PROCEDURE AND/OR INFORMATION IS EFFECTIVE UPON RECEIPT

Background Information

Flight tests have revealed power transfers may trigger the window OVERHEAT lights to illuminate due to a relay/bus timing incompatibility.

Vendor Service Bulletin Koito 8300-30-040 provides information on the upgrade that fixes this anomaly.

Operating Instructions

If the window OVERHEAT lights illuminate during a power transfer, the window heat switches must be momentarily cycled OFF, and then back ON to clear the problem. If the lights fail to extinguish, accomplish the Window Overheat non-normal procedure.

Administrative Information

This bulletin replaces bulletin TBC-5, dated January 29, 1999. Discard bulletin TBC-5. Revise the Bulletin Record page to show TBC-5 as “Cancelled” (CANC).

Insert this bulletin behind the Operations Manual Bulletin Record page in Volume 1 of your Operations Manual. Amend the Operations Manual Bulletin Record to show bulletin TBC-5R1 “In Effect” (IE).

This bulletin will be cancelled after Boeing is notified that all affected airplanes in your fleet have been modified by Vendor Service Bulletin Koito 8300-30-040. If you do not plan to modify all your airplanes and would like to have the contents of this bulletin incorporated in your Operations Manual, please advise Boeing accordingly.

Please send all correspondence regarding Operations Manual Bulletin Status to one of the following addresses:

Mailing Address	Manager, Flight Technical Publications 737 Model Boeing Commercial Airplane Group P.O. Box 3707 MS 20-89 Seattle, WA 98124-2207 USA
Fax:	(206) 662-7812
Telex:	329430 Station 627
SITA:	SEABO7X Station 627
E-mail:	FlightTechnicalPublications@Boeing.com

CS3-2691

Operations Manual Bulletin
for
The Boeing Company

The Boeing Company
Seattle, Washington 98124-2207

Number: TBC-6

Date: January 29, 1999

Document Effectivity: D6-27370-TBC

Subject: Possible Autopilot Low Frequency Pitch Oscillation During Flap Extension While in a Turn.

Reason: To inform flight crews of the possibility that the auopilot may not hold altitude when extending flaps from Flaps UP to Flaps 1.

Information in this bulletin is recommended by The Boeing Company, but may not be FAA approved at the time of writing. In the event of conflict with the FAA approved Airplane Flight Manual (AFM), the AFM shall supersede. The Boeing Company regards the information or procedures described herein as having a direct or indirect bearing on the safe operation of this model airplane.

THE FOLLOWING PROCEDURE AND/OR INFORMATION IS EFFECTIVE UPON RECEIPT

Background Information

During a recent test flight on the 737-700 with the autopilot engaged in command (CMD) mode, a low frequency pitch oscillation was experienced while entering a turn with flaps UP and simultaneously selecting flaps 1. Airspeed at the time was greater than 230 knots. This oscillation occurs as a result of a combination of aircraft loading near the aft CG limit, off nominal rigging of the elevator tab shift mechanism and FCC timing of the tab shift with flap extension.

This anomaly is fixed when Service Bulletin 737– 27–1215 is installed.

Operating Instructions

Although the probability of having all of the parameters required to trigger this anomaly is considered to be low, flight crews should be made aware of this possible condition and should monitor autopilot performance while turning and simultaneously selecting flaps from UP to 1. In some cases, disconnecting the autopilot and retrimming may be necessary. This anomaly has not been experienced at any other flap position.

Administrative Information

Insert this bulletin behind the Operations Manual Bulletin Record page in Volume 1 of your Operations Manual. Amend the Operations Manual Bulletin Record to show bulletin TBC-6 “In Effect” (IE).

This condition is temporary until Service Bulletin 737– 27–1215 is installed.

CS3-2712

Operations Manual Bulletin
for
The Boeing Company

The Boeing Company
Seattle, Washington 98124-2207

Number: TBC-7

Date: January 29, 1999

Document Effectivity: D6-27370-TBC

Subject: Engine Overheat/Fire and APU Fire Detection

Reason: To inform flight crews of a potential malfunction of the engine overheat/fire and APU fire detection system.

Information in this bulletin is recommended by The Boeing Company, but may not be FAA approved at the time of writing. In the event of conflict with the FAA approved Airplane Flight Manual (AFM), the AFM shall supersede. The Boeing Company regards the information or procedures described herein as having a direct or indirect bearing on the safe operation of this model airplane.

THE FOLLOWING PROCEDURE AND/OR INFORMATION IS EFFECTIVE UPON RECEIPT

Background Information

A defect in the manufacturing process of the engine and APU fire detector loops may allow a slow leak of the internally contained helium gas. This slow leak may result in an increase in the predetermined temperature limit for a fire or overheat condition alert.

The wheel well fire detection and wing-body overheat detection systems are not affected.

Boeing issued an All-Operator telex, same subject, requesting the operators to inspect their 737-700 series airplanes and spares inventory to identify the fire detector assemblies and fire detector elements serial numbers. Flight crews flying airplanes with suspect parts should use the operating instructions contained in this bulletin until repairs have been completed.

Operating Instructions

Engine Overheat

If an engine overheat condition occurs (ENG OVERHEAT light illuminates), it should be treated as an engine fire and the Engine Fire, Severe Damage or Separation non-normal procedure should be accomplished.

APU Operation

The APU system does not have overheat detection and the predetermined temperature limit for a APU fire may have increased. The APU should not be operated in flight unless an emergency condition requires its use. If the APU is started in flight, land at the nearest suitable field.

Note: Dispatch configurations requiring the use of the APU during flights are not authorized i.e. Dispatch with an Engine Driven Generator System inoperative.

Administrative Information

Insert this bulletin behind the Operations Manual Bulletin Record page in Volume 1 of your Operations Manual. Amend the Operations Manual Bulletin Record to show bulletin TBC-7 “In Effect” (IE).

This condition is temporary until the system is modified. The All-Operator telex provides instructions on how to receive replacement parts.

CS3-2702

Operations Manual Bulletin
for
The Boeing Company

The Boeing Company
Seattle, Washington 98124-2207

Number: TBC-8R1

Date: December 17, 1999

Document Effectivity: D6-27370-TBC

Subject: UNCOMMANDED ENGINE ACCELERATION DUE TO AN ENGINE FUEL CONTROL FAULT

Reason: This is a reissue of TBC-8, dated January 29, 1999, which informed flight crews of a CFM 56-7 engine anomaly. The purpose of this reissue is to provide Service Bulletin information.

Information in this bulletin is recommended by The Boeing Company, but may not be FAA approved at the time of writing. In the event of conflict with the FAA approved Airplane Flight Manual (AFM), the AFM shall supersede. The Boeing Company regards the information or procedures described herein as having a direct or indirect bearing on the safe operation of this model airplane.

THE FOLLOWING PROCEDURE AND/OR INFORMATION IS EFFECTIVE UPON RECEIPT

Background Information

There have been five (5) cases of uncommanded fuel flow accelerations on CFM56-7 engines. These are the result of an engine fuel control anomaly that can lead to excessive fuel flow, causing uncommanded thrust increase, engine RPM and/or EGT limit exceedances, or engine surge.

The first three (3) events occurred at near idle engine power during approach. For two (2) of the three (3) events, flight crew action was necessary to shutdown the effected engine.

Two (2) subsequent events of uncommanded fuel flow accelerations occurred on an airplane which had EEC Software version 7BI installed. These events occurred on the ground, one while parking at the gate and one while taxiing. It should be noted this software was designed to minimize but not eliminate repeat occurrences of uncommanded fuel flow acceleration.

Alert Service Bulletin CFM56-7B S/B 73-A026, dated January 20, 1999, introduced EEC software version 7.B.J which provided a significant improvement in the Fault Accommodation Logic. There have been no additional uncommanded engine acceleration events since the release of software version 7.B.J. This Alert Service Bulletin and this Operations Manual Bulletin apply to airplanes with manufacturer's line numbers 1 through 193. Line number 194 and on received the software fix during production.

In addition, a review of the current 737 non-normal procedures has been conducted and the results include a new procedure for an engine limit, surge, stall condition. This change aligns the 737 non-normal procedure with other Boeing models' non-normal procedure. This new procedure was incorporated in Rev. 2, dated July 31, 1998, of the TBC Operations Manual.

Operating Instructions

If one or more of the following occurs, perform the Engine Limit/Surge/Stall procedure:

•engine RPM or EGT indications are abnormal, approaching or exceeding limits

•no response to thrust lever movement

•abnormal engine noises.

Note: Flight crews should remain vigilant for uncommanded engine acceleration during all phases of flight.

Administrative Information

This bulletin replaces bulletin TBC-8, dated January 29, 1999. Discard bulletin TBC-8. Revise the Bulletin Record page to show TBC-8 as "Cancelled" (CANC).

Insert this bulletin behind the Operations Manual Bulletin Record page in Volume 1 of your Operations Manual. Revise the Bulletin Record page to show bulletin TBC-8R1 "In Effect" (IE).

This bulletin will be cancelled after Boeing is notified that all affected airplanes in your fleet have been modified by Alert Service Bulletin CFM56-7BS/B 73-A026. If you do not plan to modify all your airplanes and would like to have the contents of this bulletin incorporated in your Operations Manual, please advise Boeing accordingly.

Please send all correspondence regarding Operations Manual Bulletin Status to one of the following addresses:

Mailing Address	Manager, Flight Technical Publications 737 Model Boeing Commercial Airplane Group P.O. Box 3707 MS 20-89 Seattle, WA 98124-2207 USA
Fax:	(206) 662-7812
Telex:	329430 Station 627
SITA:	SEABO7X Station 627

CS3-2723

Intentionally
Blank

Operations Manual Bulletin
for
The Boeing Company

The Boeing Company
Seattle, Washington 98124-2207

Number: TBC-9

Date: January 29, 1999

Document Effectivity: D6-27370-TBC

Subject: APU DC FUEL PUMP OPERATIONAL ANOMALY

Reason: To inform flight crews of an APU DC fuel pump operational anomaly.

Information in this bulletin is recommended by The Boeing Company, but may not be FAA approved at the time of writing. In the event of conflict with the FAA approved Airplane Flight Manual (AFM), the AFM shall supersede. The Boeing Company regards the information or procedures described herein as having a direct or indirect bearing on the safe operation of this model airplane.

THE FOLLOWING PROCEDURE AND/OR INFORMATION IS EFFECTIVE UPON RECEIPT

Background Information

The APU DC Fuel Pump is intended to provide pressurized fuel to the APU when no AC fuel pump is operating.

Flight testing has revealed that the APU DC fuel pump will not operate automatically when the APU fuel control senses a low fuel pressure condition, unless the center tank fuel pump switches are in the ON position. This condition is caused by the routing of the low fuel pressure signal through the center tank pump switches. When these switches are in the OFF position, the low pressure signal is interrupted.

Operating Instructions

With the center tank fuel pump switches in the OFF position, the APU DC fuel pump does not function as described in the Operations Manual and should be treated as inoperative.

Note: With no AC power available and the DC fuel pump inoperative, APU starts are not recommended above 25,000 feet.

Operations Manual Information

The Non-Normal Procedure page for Loss of Both Engine Driven Generators has been revised to include the above Note.

Administrative Information

Insert this bulletin behind the Operations Manual Bulletin Record page in Volume 1 of your Operations Manual. Amend the Operations Manual Bulletin Record to show bulletin TBC-9 “Incorporated” (INC).

This condition is temporary until the system is modified. This bulletin will be revised to include Service Bulletin information when available.

CS3-2728

Operations Manual Bulletin
for
The Boeing Company

The Boeing Company
Seattle, Washington 98124-2207

Number: TBC-10R1

Date: September 10, 1999

Document Effectivity: D6-27370-TBC

Subject: LANDING ALTITUDE DISPLAY ANOMALY

Reason: This is a reissue of TBC-10, dated January 29, 1999, which informed flight crews of a landing altitude display anomaly. The purpose of this reissue is to provide additional information regarding the anomaly as well as information regarding the FMC software upgrade to correct the anomaly.

Information in this bulletin is recommended by The Boeing Company, but may not be FAA approved at the time of writing. In the event of conflict with the FAA approved Airplane Flight Manual (AFM), the AFM shall supersede. The Boeing Company regards the information or procedures described herein as having a direct or indirect bearing on the safe operation of this model airplane.

THE FOLLOWING PROCEDURE AND/OR INFORMATION IS EFFECTIVE UPON RECEIPT

Background Information

On the PFD altitude indication, landing altitude is displayed as an amber crosshatched area indicating:

- the FMC landing altitude for the destination runway or airport, or
- the landing altitude for departure runway or airport until 400 NM from departure or one-half the distance to destination, whichever occurs first.

Flight testing has revealed that an incorrect landing altitude indication may appear after flight plan entry. This anomaly will in turn result in an incorrect transition altitude indication. FMC Update U10.3, due early first quarter 2000, will correct both anomalies.

Operating Instructions

Re-enter the flight plan route and verify correct landing altitude is displayed.

Administrative Information

This bulletin replaces bulletin TBC-10, dated January 29, 1999. Discard bulletin TBC-10. Revise the Bulletin Record page to show TBC-10 as “Cancelled” (CANC).

Insert this bulletin behind the Operations Manual Bulletin Record page in Volume 1 of your Operations Manual. Amend the Operations Manual Bulletin Record to show bulletin TBC-10R1 “In Effect” (IE).

This condition is temporary until the system is modified. This bulletin will be revised to include Service Bulletin information when available.

CS3-2736

Operations Manual Bulletin
for
The Boeing Company

The Boeing Company
Seattle, Washington 98124-2207

Number: TBC-11R1

Date: March 26, 1999

Document Effectivity: D6-27370-TBC

Subject: COLLINS ILS/GPS MULTI-MODE RECEIVER (MMR) FAILURE

Reason: This is a reissue of TBC-11, dated January 29, 1999, which informed flight crews of the lack of failure indications associated with certain internal Multi-Mode Receiver (MMR) failures. The purpose of this reissue is to add Service Bulletin information.

Information in this bulletin is recommended by The Boeing Company, but may not be FAA approved at the time of writing. In the event of conflict with the FAA approved Airplane Flight Manual (AFM), the AFM shall supersede. The Boeing Company regards the information or procedures described herein as having a direct or indirect bearing on the safe operation of this model airplane.

THE FOLLOWING PROCEDURE AND/OR INFORMATION IS EFFECTIVE UPON RECEIPT

Background Information

Flight testing has shown that certain internal MMR failures can occur which do not display fault indications or failure flags. In this event, the associated ILS and GPS will not function. ILS frequency, localizer deviation and glideslope deviation indicators will not be displayed. Normal GPS functions and updates will not be available and the altitude range arc will move erratically if displayed.

Collins GLU-920 Service Bulletins (8 and 10 through 15) provide information on the upgrade that fixes the anomaly.

Operating Instructions

If course and glideslope deviation indicators are not displayed, consider the event as an ILS receiver failure. Dual channel approach and autoland will not be available. Consider the effect on approach minimums and select an appropriate course of action. When flight conditions permit, view FMC Position Page 2 and determine if a GPS position is missing. If so, consider the associated GPS receiver as failed.

Administrative Information

This bulletin replaces bulletin TBC-11, dated January 29, 1999. Discard bulletin TBC-11. Revise the Bulletin Record page to show TBC-11 as “Cancelled” (CANC).

Insert this bulletin behind the Operations Manual Bulletin Record page in Volume 1 of your Operations Manual. Amend the Operations Manual Bulletin Record to show bulletin TBC-11R1 “In Effect” (IE).

This bulletin will be cancelled after Boeing is notified that all affected airplanes in your fleet have been modified by Collins GLU-920 Service Bulletins (8 and 10 through 15). If you do not plan to modify all your airplanes and would like to have the contents of this bulletin incorporated in your Operations Manual, please advise Boeing accordingly.

Please send all correspondence regarding Operations Manual Bulletin Status to one of the following addresses:

Mailing Address	Manager, Flight Technical Publications 737 Model Boeing Commercial Airplane Group P.O. Box 3707 MS 20-89 Seattle, WA 98124-2207 USA
Fax:	(206) 662-7812
Telex:	329430 Station 627
SITA:	SEABO7X Station 627

CS3-2737

Operations Manual Bulletin
for
The Boeing Company

The Boeing Company
Seattle, Washington 98124-2207

Number: TBC-12R1

Date: September 6, 1999

Document Effectivity: D6-27370-TBC

Subject: INADVERTANT RTO AUTOBRAKING DURING LANDING

Reason: This is a reissue of TBC-12, dated January 29, 1999, which informed flight crews of the potential risk of RTO braking during landing on 737-600/700/800 airplanes. The purpose of this reissue is to provide Service Letter information.

Information in this bulletin is recommended by The Boeing Company, but may not be FAA approved at the time of writing. In the event of conflict with the FAA approved Airplane Flight Manual (AFM), the AFM shall supersede. The Boeing Company regards the information or procedures described herein as having a direct or indirect bearing on the safe operation of this model airplane.

THE FOLLOWING PROCEDURE AND/OR INFORMATION IS EFFECTIVE UPON RECEIPT

Background Information

A 737-800 operator has reported three incidents of inadvertent selection of RTO braking during landing roll. In each case, flight crews were attempting to disarm the autobrakes by placing the Auto Brake Select Switch to the "OFF" position. The RTO events were caused by over-rotating the switch past the "OFF" position to the "RTO" position. Boeing Flight Test and Boeing Engineering have confirmed that RTO arming and application logic in the autobrake system may allow RTO braking to engage if the switch is placed in the "RTO" position at any speed after landing autobraking has initiated.

Boeing Service Letter 737-SL-32-078 provides information concerning an autobrake software modification to re-verify the arming conditions when RTO is selected during landing roll. This modification will prevent RTO braking even if the switch is inadvertently placed in the "RTO" position during landing.

Operating Instructions

Although the autobrake system can be disarmed by placing the Auto Brake Select Switch in the "OFF" position, Boeing recommends the use of manual braking to disarm the autobrake system. Flight crews may also disarm the autobrakes by moving the SPEED BRAKE lever to the down detent if speed brakes are not further required to assist stopping.

Administrative Information

This bulletin replaces bulletin TBC-12, dated January 29, 1999. Discard bulletin TBC-12. Revise the Bulletin Record page to show TBC-12 as “Cancelled” (CANC).

Insert this bulletin behind the Operations Manual Bulletin Record page in Volume 1 of your Operations Manual. Amend the Operations Manual Bulletin Record to show bulletin TBC-12R1 “In Effect” (IE).

This bulletin will be cancelled after Boeing is notified that all affected airplanes in your fleet have been modified by Service Letter 737-SL-32-078. If you do not plan to modify all your airplanes and would like to have the contents of this bulletin incorporated in your Operations Manual, please advise Boeing accordingly.

Please send all correspondence regarding Operations Manual Bulletin Status to one of the following addresses:

Mailing Address	Manager, Flight Technical Publications 737 Model Boeing Commercial Airplane Group P.O. Box 3707 MS 20-89 Seattle, WA 98124-2207 USA
Fax:	(206) 662-7812
Telex:	329430 Station 627
SITA:	SEABO7X Station 627

CS3-2752

Operations Manual Bulletin
for
The Boeing Company

The Boeing Company
Seattle, Washington 98124-2207

Number: TBC-13R1

Date: April 23, 1999

Document Effectivity: D6-27370-TBC

Subject: NUISANCE PWS FAIL ANNUNCIATION

Reason: This is a reissue of TBC-13, dated January 29, 1999, which informed flight crews of predictive windshear system operational conditions that can cause the subject annunciation to be displayed. The purpose of this reissue is to provide Service Bulletin information.

Information in this bulletin is recommended by The Boeing Company, but may not be FAA approved at the time of writing. In the event of conflict with the FAA approved Airplane Flight Manual (AFM), the AFM shall supersede. The Boeing Company regards the information or procedures described herein as having a direct or indirect bearing on the safe operation of this model airplane.

THE FOLLOWING PROCEDURE AND/OR INFORMATION IS EFFECTIVE UPON RECEIPT

Background Information

Flight testing and customer reports have confirmed that a nuisance PWS FAIL annunciation will occur for approximately 30 seconds under the following conditions:

- WXR has not been selected on at any time since electrical power up, and
- one or both engines are advanced for takeoff and the indicated airspeed is increasing.

This applies to the Allied Signal weather radar system with the Predictive Windshear function activated. (Allied Signal/Bendix weather radar system receiver-transmitter part number 066-50008-0405). The message will extinguish approximately 30 seconds after appearing.

Allied Signal/Bendix Service Bulletin RTA-4B-34-97 (M4508) corrects the anomaly. This service bulletin converts the weather radar RT unit part number from 066-50008-0405 to 066-50008-0406.

All airplanes prior to Line Number 347 are affected. Follow-on airplanes will have the -0406 receiver-transmitters installed prior to delivery.

Operating Instructions

To prevent the annunciation from occurring, select the weather radar system on prior to takeoff. The weather radar may then remain on or be turned off as desired for the remainder of the flight. Consider any subsequent PWS FAIL annunciation or WINDSHEAR alert as valid.

Administrative Information

This bulletin replaces bulletin TBC-13, dated January 29, 1999. Discard bulletin TBC-13. Revise the Bulletin Record page to show TBC-13 as “Cancelled” (CANC).

Insert this bulletin behind the Operations Manual Bulletin Record page in Volume 1 of your Operations Manual. Amend the Operations Manual Bulletin Record to show bulletin TBC-13R1 “In Effect” (IE).

This bulletin will be cancelled after Boeing is notified that all affected airplanes in your fleet have been modified by Allied Signal/Bendix Service Bulletin RTA-4B-34-97 (M4508).

If you do not plan to modify all your airplanes and would like to have the contents of this operations manual bulletin incorporated in your Operations Manual, please advise Boeing accordingly.

Please send all correspondence regarding Operations Manual Bulletin Status to one of the following addresses:

Mailing Address	Manager, Flight Technical Publications 737 Model Boeing Commercial Airplane Group P.O. Box 3707 MS 20-89 Seattle, WA 98124-2207 USA
Fax:	(206) 662-7812
Telex:	329430 Station 627
SITA:	SEABO7X Station 627

CS3-2765

Operations Manual Bulletin
for
The Boeing Company

The Boeing Company
Seattle, Washington 98124-2207

Number: TBC-14

Date: January 29, 1999

Document Effectivity: D6-27370-TBC

Subject: AFDS PERFORMANCE DEGRADATION WITH RADIO ALTIMETER FAILURE

Reason: To inform flight crews of potential AFDS performance degradation associated with certain Radio Altimeter failure modes.

Information in this bulletin is recommended by The Boeing Company, but may not be FAA approved at the time of writing. In the event of conflict with the FAA approved Airplane Flight Manual (AFM), the AFM shall supersede. The Boeing Company regards the information or procedures described herein as having a direct or indirect bearing on the safe operation of this model airplane.

THE FOLLOWING PROCEDURE AND/OR INFORMATION IS EFFECTIVE UPON RECEIPT

Background Information

The LNAV function of the flight management computer (FMC) is limited to a bank angle limit of 30 degrees by the flight control computers (FCC) when the radio altitude is 400 feet or greater. Below 200 feet, LNAV is limited to 8 degrees of bank angle. Between 200 and 400 feet bank angle is limited to 15 degrees. The actual bank angle commanded by the FMC will be within these bounds.

Flight testing has confirmed that certain radio altimeter failure modes can cause degraded autopilot flight director system (AFDS) performance. These failure modes may not cause an amber RA failure flag to be displayed.

If a radio altimeter fails while transmitting a valid altitude of less than 200 feet or if the radio altimeter output never becomes valid after power up on the ground, the associated FCC, which uses that radio altimeter as its primary source of data, will use the last valid altitude received or use zero feet if no valid altitude is received after power-up. This will result in the LNAV command on that side always being limited to 8 degrees of bank angle, during either autopilot or flight director

operation. Depending on the aggressiveness of the programmed turns of the active LNAV path, this failure could result in the airplane departing the LNAV path if the FMC desired commands exceed the AFDS bank limits. This failure will be indicated by the airplane symbol not following the defined (magenta) path as shown on the Navigation Display.

Operating Instructions

Boeing procedures emphasize the need for pilot monitoring of automated systems to ensure acceptable performance in flight. In this case, vigilant flight path monitoring will reveal the radio altimeter failure as a deviation from the FMC computed path when using LNAV guidance. This failure will also cause a flight director disagreement in LNAV mode. The flight director associated with the failed radio altimeter will be limited to 8 degrees of bank. The flight director associated with the operating radio altimeter will not be bank angle limited unless the airplane is below 400 feet AGL. If these effects occur, the flight crew must utilize other appropriate methods of flight path control at their disposal. These methods include but are not limited to: use of manual flight modes to keep the airplane on the FMC path or use of VOR guidance to track appropriate radials if the LNAV track overlays VOR airway structure. Additionally, the autopilot and flight director LNAV steering commands will be normal from the FCC associated with a functioning radio altimeter.

Administrative Information

Insert this bulletin behind the Operations Manual Bulletin Record page in Volume 1 of your Operations Manual. Amend the Operations Manual Bulletin Record to show bulletin TBC-14 “In Effect” (IE).

This condition is temporary until the system is modified. This bulletin will be revised to include Service Bulletin information when available.

CS3-2776

Operations Manual Bulletin
for
The Boeing Company

The Boeing Company
Seattle, Washington 98124-2207

Number: TBC-15

Date: January 29, 1999

Document Effectivity: D6-27370-TBC

Subject: FMC Software Restart Anomaly

Reason: To inform flight crews of potential FMC software restarts caused by certain CDU inputs during flight.

Information in this bulletin is recommended by The Boeing Company, but may not be FAA approved at the time of writing. In the event of conflict with the FAA approved Airplane Flight Manual (AFM), the AFM shall supersede. The Boeing Company regards the information or procedures described herein as having a direct or indirect bearing on the safe operation of this model airplane.

THE FOLLOWING PROCEDURE AND/OR INFORMATION IS EFFECTIVE UPON RECEIPT

Background Information

Boeing has confirmed an airline report of FMC anomalies which can cause software restarts during flight. When in the descent phase of flight, if the flight crew EXECutes a change to the flight plan on the ACT RTE LEGS or ACT RTE page and then presses the DES key to display the DES page before predictions have completed processing, an FMC internal program fault will occur causing an FMC “software restart.” The FMC navigation function does not correctly recover from the program fault causing a variety of misleading cockpit displays and lateral guidance anomalies until the correction is complete. In airplanes with dual FMCs, the restart can occur in one or both FMCs. In airplanes with a single FMC, the correction of the program fault may take up to 8 minutes.

Laboratory testing has verified that these anomalies are limited to FMCs loaded with software version U10.2. These anomalies can cause a significant increase in pilot workload and have the potential to degrade the flight crew's situational awareness. LNAV guidance can be unreliable, the MAP display can be oriented along an erroneous track and a large erroneous wind can be displayed on the MAP and CDU. The software will be revised as soon as possible. The following specific flight deck effects are indications of a software restart:

For single FMC installations:

- VTK flag, if navigation display is in MAP or CTR MAP mode
- Amber FMC light on pilots' instrument panels
- LNAV and VNAV disconnect
- CDU installation - "FMC" displayed on CDU for approximately 5 seconds
- MCDU installation - MCDU display reverts to MENU page, initially without "<FMC" prompt

For dual FMC installations:

Left FMC restart indications:

- VTK flag if Captain's navigation display is in MAP or CTR MAP mode
- Amber FMC light on pilots' instrument panels
- LNAV and VNAV disconnect if FCC A is in CMD or is the master F/D
- CDU installation - "FMC" displayed on CDU for approximately 5 seconds
- MCDU installation - MCDU display reverts to MENU page, initially without "<FMC" prompt

Right FMC restart indications:

- VTK flag if First Officer's navigation display is in MAP or CTR MAP mode
- Momentary amber FMC light on pilots' instrument panels (displayed for at least 4 seconds)
- LNAV and VNAV disconnect if FCC B is in CMD or is the master F/D
- FMC CDU message "SINGLE FMC OPERATION", which may clear after 4 seconds

Service Bulletin 737-34A1502, provides information on the U10.2A software upgrade that fixes the anomaly.

Operating Instructions

While in the descent phase of flight, flight crews should not make modifications to the flight plan on the ACT RTE LEGS or ACT RTE page and then press the DES key before predictions have completed processing. Approximately 10 seconds elapsed time after EXECuting the modification or display of destination ETA on the CDU PROGRESS 1/3 page indicates processing completion.

If a program fault software restart occurs, LNAV and VNAV are not available. Use conventional means of navigation until the restart is complete and navigation indications have returned to normal.

The following procedures may help speed the recovery from a program fault:

For single FMC equipped airplanes:

- The FMC will be unusable for 6 - 8 minutes.
- When the FMC CDU POS REF 2/3 page indicates an FMC groundspeed (GS) of 80 kts or greater, a position shift to an IRS position should be executed on the POS SHIFT 3/3 page.

For dual FMC equipped airplanes:

- If one or both FMCs experience a program fault, cycling the FMC source select switch to a different source for 10 seconds will restore the FMC groundspeed to the correct value.

FMC navigation is restored when the FMC groundspeed is within 20 kts of the IRS groundspeed. FMC and IRS groundspeeds are displayed on the CDU POS REF 2/3 page. After the FMC recovers, the RTE LEGS page will display an inactive route with a SELECT ACTIVE WPT/LEG message. Select the appropriate active waypoint and resume FMC navigation.

Administrative Information

Insert this bulletin behind the Operations Manual Bulletin Record page in Volume 1 of your Operations Manual. Amend the Operations Manual Bulletin Record to show bulletin TBC-15 “In Effect” (IE).

This condition is temporary until Service Bulletin 737-34A1502 is installed.

CS3-2777

Intentionally
Blank

Operations Manual Bulletin
for
The Boeing Company

The Boeing Company
Seattle, Washington 98124-2207

Number: TBC-16R1

Date: April 16, 1999

Document Effectivity: D6-27370-TBC

Subject: IMPROPER AUTOTHROTTLE THRUST SETTING DURING GO-AROUND AFTER ASSUMED TEMPERATURE DERATED TAKEOFF

Reason: This is a reissue of TBC-16, dated March 3, 1999, which informed flight crews of operational issues associated with an FMC/Autothrottle interface anomaly. The purpose of this reissue is to provide additional information about the anomaly.

Information in this bulletin is recommended by The Boeing Company, but may not be FAA approved at the time of writing. In the event of conflict with the FAA approved Airplane Flight Manual (AFM), the AFM shall supersede. The Boeing Company regards the information or procedures described herein as having a direct or indirect bearing on the safe operation of this model airplane.

THE FOLLOWING PROCEDURE AND/OR INFORMATION IS EFFECTIVE UPON RECEIPT

Background Information

In 737-600/-700/-800 airplanes, after a reduced thrust takeoff is performed using the assumed temperature method, the autothrottle may not advance thrust to the rated go-around thrust setting when requested to do so. The FMC applies the assumed temperature reduction to the go-around rating sent to the autothrottle for the duration of the flight if a cruise altitude of approximately 15,000 feet is not achieved during the flight. During approach, with the first TO/GA switch activation, the autothrottle may not advance to the correct go-around thrust to meet climb rate requirements (1000 - 2000 FPM). In addition, full rated go-around thrust settings will not be available from the autothrottle with the second TO/GA switch activation. However, in all cases, the go-around thrust setting reference displayed to the flight crew on the N1 indicator will be correct and full rated go-around thrust will be available by manually advancing the thrust levers to maximum rated thrust.

This situation does not occur after a full thrust takeoff or if the takeoff is performed using only a fixed derate. Additionally, if a fixed derate is further reduced using the assumed temperature method, the FMC will apply the assumed

temperature reduction to the fixed derate thrust during the takeoff phase of flight. Both the fixed derate and the assumed temperature thrust reduction will then gradually decrease until full rated thrust is restored at approximately 15,000 feet. On approach, the FMC will apply the full thrust rating for the engine and send this value to the autothrottle for go-around.

Operating Instructions

Operators should implement one or more of the following crew procedures until the 737-600/-700/-800 FMC software has been modified to correct this anomaly:

- Crews should closely monitor autothrottle function and manually override when required.
- Use only manual thrust setting techniques for go-around if an assumed temperature thrust reduction was selected at the departure airport and the airplane has not climbed above 15,000 feet.
- Use only fixed derates for reduced thrust takeoffs.

Administrative Information

This bulletin replaces bulletin TBC-16, dated March 3, 1999. Discard bulletin TBC-16. Revise the Bulletin Record page to show TBC-16 as “Cancelled” (CANC).

Insert this bulletin behind the Operations Manual Bulletin Record page in Volume 1 of your Operations Manual. Amend the Operations Manual Bulletin Record to show bulletin TBC-16R1 “In Effect” (IE).

This condition is temporary until the system is modified. This bulletin will be revised to include Service Bulletin information when available.

CS3-2796

Operations Manual Bulletin
for
The Boeing Company

The Boeing Company
Seattle, Washington 98124-2207

Number: TBC-17R1

Date: November 6, 2000

Document Effectivity: D6-27370-TBC

Subject: CONTROL WHEEL MICROPHONE/INTERPHONE SWITCH ANOMALY

Reason: This is a reissue of TBC-17, dated March 19, 1999, which informed flight crews that the position of the Control Wheel Microphone/ Interphone switch can prevent PA announcements from the flight deck. The purpose of this reissue is to add Service Bulletin information.

Information in this bulletin is recommended by The Boeing Company, but may not be FAA approved at the time of writing. In the event of conflict with the FAA approved Airplane Flight Manual (AFM), the AFM shall supersede. The Boeing Company regards the information or procedures described herein as having a direct or indirect bearing on the safe operation of this model airplane.

THE FOLLOWING PROCEDURE AND/OR INFORMATION IS EFFECTIVE UPON RECEIPT

Background Information

An operator recently reported an anomaly while attempting a PA announcement using the audio panel PTT switch with the Control Wheel Microphone/Interphone switch latched in the INT (flight interphone) position. If the Control Wheel Microphone/Interphone switch is latched in the INT position and the associated audio panel PTT switch or hand microphone is used with the PA Transmitter Select switch selected, transmissions cannot be made on the PA system.The aft aisle PA handset or PA hand microphone continue to function normally in this condition. The other pilot's PTT switch and hand microphone operate normally if the associated Control Wheel Microphone/Interphone switch is not also latched in the INT position.

Boeing Service Bulletin 737-23-1157 provides information on the upgrade that fixes this anomaly.

Administrative Information

This bulletin replaces bulletin TBC-17, dated March 19, 1999. Discard bulletin TBC-17. Revise the Bulletin Record page to show TBC-17 as “Cancelled” (CANC).

Insert this bulletin behind the Operations Manual Bulletin Record page in Volume 1 of your Operations Manual. Amend the Operations Manual Bulletin Record to show bulletin TBC-17R1 “In Effect” (IE).

This bulletin will be cancelled after Boeing is notified that all affected airplanes in your fleet have been modified by Service Bulletin 737-23-1157. If you do not plan to modify all your airplanes and would like to have the contents of this bulletin incorporated in your Operations Manual, please advise Boeing accordingly.

Please send all correspondence regarding Operations Manual Bulletin Status to one of the following addresses:

Mailing Address	Manager, Flight Technical Publications 737 Model Boeing Commercial Airplane Group P.O. Box 3707 MS 20-89 Seattle, WA 98124-2207 USA
Fax:	(206) 662-7812
Telex:	329430 Station 627
SITA:	SEABO7X Station 627
E-mail:	FlightTechnicalPublications@Boeing.com

CS3-2791

Operations Manual Bulletin
for
The Boeing Company

The Boeing Company
Seattle, Washington 98124-2207

Number: TBC-18R2

Date: November 1, 2001

Document Effectivity: D6-27370-TBC

Subject: NUISANCE ZONE TEMP LIGHT ILLUMINATIONS ON 737-800 AIRPLANES

Reason: This is a reissue of TBC-18R1, dated December 11, 2000, which informed flight crews of operational issues associated with nuisance ZONE TEMP light illumination during preflight procedures. The purpose of this reissue is to provide amplification of Normal Preflight and Shutdown procedures.

Information in this bulletin is recommended by The Boeing Company, but may not be FAA approved at the time of writing. In the event of conflict with the FAA approved Airplane Flight Manual (AFM), the AFM shall supersede. The Boeing Company regards the information or procedures described herein as having a direct or indirect bearing on the safe operation of this model airplane.

THE FOLLOWING PROCEDURE AND/OR INFORMATION IS EFFECTIVE UPON RECEIPT

Background Information

Many 737-800 operators have reported intermittent illumination of one, two or all three air conditioning system ZONE TEMP lights on the forward overhead panel during master caution recall. Subsequent maintenance interrogation of the pack/zone temperature controllers typically shows no faults or occasionally, trim air valve(s) faults. Resetting the master caution system extinguishes the ZONE TEMP light(s). A telex was sent to the operators that provides a workaround to prevent, or at least reduce the number of nuisance ZONE TEMP lights. This alternate procedure was coordinated with Service Engineering, Environmental Control Systems (ECS) Engineering and ECS vendor, Allied Signal.

The root cause of the problem has been associated with turning the Battery switch OFF while the Trim Air switches remain ON and ground power is applied to the airplane. With the Battery switch OFF, the Trim Air valves are not powered, and the Zone Temp Controllers remain powered. The result can be a ZONE TEMP light on master caution recall.

Service Bulletin 737-21-1133, to be released December 14, 2000, provides information for the hardware upgrade that fixes the ZONE TEMP light nuisance.

Operating Instructions

After landing, turn the Trim Air switches OFF prior to turning the Battery switch OFF during the Secure Procedure. Prior to Engine Start turn the Trim Air switches ON after turning the Battery switch ON (follow the normal Flight Deck Preparation - First Officer Procedure).

This procedure is temporary until system modifications are complete.

Administrative Information

This bulletin replaces bulletin TBC-18R1, dated December 11, 2000. Discard bulletin TBC-18R1. Revise the Bulletin Record page to show TBC-18R1 as “Cancelled” (CANC).

Insert this bulletin behind the Operations Manual Bulletin Record page in Volume 1 of your Operations Manual. Amend the Operations Manual Bulletin Record to show bulletin TBC-18R2 “In Effect” (IE).

This bulletin will be cancelled after Boeing is notified that all affected airplanes in your fleet have been modified by Service Bulletin 737-21-1133. If you do not plan to modify all your airplanes and would like to have the contents of this bulletin incorporated in your Operations Manual, please advise Boeing accordingly.

Please send all correspondence regarding Operations Manual Bulletin Status to one of the following addresses:

Mailing Address	Manager, Flight Technical Publications 737 Model Boeing Commercial Airplane Group P.O. Box 3707 MS 20-89 Seattle, WA 98124-2207 USA
Fax:	(206) 662-7812
Telex:	329430 Station 627
SITA:	SEABO7X Station 627
E-mail:	FlightTechnicalPublications@Boeing.com

CS3-2807

Operations Manual Bulletin
for
The Boeing Company

The Boeing Company
Seattle, Washington 98124-2207

Number: TBC-19

Date: June 10, 1999

Document Effectivity: D6-27370-TBC

Subject: 737-600/-700/-800 ELEVATOR TAB OPERATIONAL LIMITATIONS

Reason: To inform flight crews of operational limitations associated with elevator tab inspection requirements.

Information in this bulletin is recommended by The Boeing Company, but may not be FAA approved at the time of writing. In the event of conflict with the FAA approved Airplane Flight Manual (AFM), the AFM shall supersede. The Boeing Company regards the information or procedures described herein as having a direct or indirect bearing on the safe operation of this model airplane.

THE FOLLOWING PROCEDURE AND/OR INFORMATION IS EFFECTIVE UPON RECEIPT

Background Information

As a result of structural damage to an elevator tab rod fitting discovered on an in-service 737-800 airplane, the FAA has issued an Airworthiness Directive (AD) requiring operators to perform inspections and modifications of this part. The AD will require an operational limitation on certain 737-600/-700/-800 airplanes until inspections and modifications detailed in service bulletin SB 737-55A1068 are complete. This service bulletin calls for inspection within 10 days and has instructions for an interim fix and ongoing inspections.

Boeing analysis has confirmed that the damage was aggravated by speedbrake induced airframe vibrations. The severity of this vibration can be reduced by restricting the maximum airspeed with speedbrakes extended. Since this airspeed restriction adversely affects the airplane's ability to descend rapidly, the maximum cruise altitude must also be reduced to meet FAA emergency descent oxygen requirements.

The AD and this bulletin apply to airplanes with manufacturer's line numbers 1 through 190. Airplanes with service bulletin SB 737-55-1063 installed are not affected. Service bulletin SB 737-55-1063 calls for replacement of the tab mast fitting with a new part.

Operating Instructions

Do not operate airplanes affected by this bulletin at speeds in excess of 310 knots IAS with speedbrakes extended. Do not operate these airplanes above FL 390.

This procedure is required within 24 hours of AD release and is temporary until service bulletins SB 737-55A1068 or SB 737-55-1063 are complete.

Administrative Information

Insert this bulletin behind the Operations Manual Bulletin Record page in Volume 1 of your Operations Manual. Amend the Operations Manual Bulletin Record to show bulletin TBC-19 “In Effect” (IE).

This bulletin will be cancelled after Boeing is notified that all affected airplanes in your fleet have been modified by either SB 737-55A1068 or SB 737-55-1063.

Please send all correspondence regarding Operations Manual Bulletin Status to one of the following addresses:

Mailing Address Manager, Flight Technical Publications
737 Model
Boeing Commercial Airplane Group
P.O. Box 3707 M/C 20-89
Seattle, WA 98124-2207
USA

Fax: (206) 662-7812
Telex: 329430 Station 627
SITA: SEABO7X

CS3-2819

Operations Manual Bulletin
for
The Boeing Company

The Boeing Company
Seattle, Washington 98124-2207

Number: TBC-20

Date: April 17, 2000

Document Effectivity: D6-27370-TBC

Subject: VHF RADIO USE FOR ATC GROUND OPERATIONS

Reason: To inform flight crews of the recommendation to use the VHF radio connected to the top of fuselage antenna for primary ATC communications on the ground.

Information in this bulletin is recommended by The Boeing Company, but may not be FAA approved at the time of writing. In the event of conflict with the FAA approved Airplane Flight Manual (AFM), the AFM shall supersede. The Boeing Company regards the information or procedures described herein as having a direct or indirect bearing on the safe operation of this model airplane.

THE FOLLOWING PROCEDURE AND/OR INFORMATION IS EFFECTIVE UPON RECEIPT

Background Information

As a result of antenna location, several operators have reported blanking or inability to use the VHF radio connected to the bottom of fuselage antenna for Air Traffic Control (ATC) communications during ground operations at certain locations. The investigation of these reports indicated that blocking of the signal to the lower antenna caused the temporary loss of communications while on the ground. This blocking can be caused by the airplane not having line of sight to the tower due to the airplane fuselage, other airplanes or airport topography.

This issue will be addressed in a Federal Aviation Administration (FAA) Airworthiness Directive. Boeing has sent a telegraphic Service Letter to all operators and will create an Alert Service Bulletin to address retrofit of delivered airplanes. The Alert Service Bulletin is scheduled for release by second quarter 2000 and will direct the reconnection of the antennas to the following positions:

- VHF 1 to top center fuselage antenna
- VHF 2 to bottom aft fuselage antenna
- VHF 3, if installed, will remain in the bottom forward position.

In addition, Boeing is processing a change in production to reconnect the VHF antennas as described above.

Operating Instructions

Use the VHF radio connected to the top of fuselage antenna for primary ATC communications on the ground.

Operations Manual Information

Attached are the replacement pages which reflect the revised information. Remove the pages listed below and replace with the attached pages to your Operations Manual.

Remove Page No.	Date	Insert Page No.	Date
L.0.1 - L.0.2	January 28, 2000	L.0.1 - L.0.2	April 17, 2000
L.10.3 - L.10.4	January 28, 2000	L.10.3 - L.10.4	April 17, 2000

Administrative Information

Insert this bulletin behind the Operations Manual Bulletin Record page in Volume 1 of your Operations Manual. Amend the Operations Manual Bulletin Record to show bulletin TBC-20 “Incorporated” (INC).

This bulletin will be revised to include Service Bulletin information when available.

CS3-2893

Operations Manual Bulletin
for
The Boeing Company

The Boeing Company
Seattle, Washington 98124-2207

Number: TBC-21

Date: April 28, 2000

Document Effectivity: D6-27370-TBC

Subject: GPWS MINIMUMS VOICE CALLOUT ANOMALY

Reason: To inform flight crews of an anomaly in the DH/MDA voice callout functionality.

Information in this bulletin is recommended by The Boeing Company, but may not be FAA approved at the time of writing. In the event of conflict with the FAA approved Airplane Flight Manual (AFM), the AFM shall supersede. The Boeing Company regards the information or procedures described herein as having a direct or indirect bearing on the safe operation of this model airplane.

THE FOLLOWING PROCEDURE AND/OR INFORMATION IS EFFECTIVE UPON RECEIPT

Background Information

The DH/MDA Callouts do not always function correctly on airplanes equipped with Look Ahead Terrain Alerting (GPWS). If the Minimums Reference Selector (MINS) on the EFIS Control Panel is rotated from BARO to RADIO below 1000 feet AGL, the callout may occur immediately and not at the appropriate altitude. This does not occur when the switch is rotated above 1000 feet AGL.

The Landing Altitude/Minimums Indications on the PFD display function correctly. These include the BARO Minimums Pointer and the Minimums Reference/Altitude.

Operating Instructions

Do not rotate the Minimums Reference Selector (MINS) on the EFIS Control Panel from BARO to RADIO once the airplane has descended below 1000 feet AGL.

Administrative Information

Insert this bulletin behind the Operations Manual Bulletin Record page in Volume 1 of your Operations Manual. Amend the Operations Manual Bulletin Record to show bulletin TBC-21 “In Effect” (IE).

This bulletin will be revised to include Service Bulletin information when available.

CS3-2898

Operations Manual Bulletin
for
The Boeing Company

The Boeing Company
Seattle, Washington 98124-2207

Number: TBC-22

Date: May 8, 2000

Document Effectivity: D6-27370-TBC

Subject: TCAS DISPLAY ANOMALY

Reason: To inform flight crews of a TCAS display anomaly.

Information in this bulletin is recommended by The Boeing Company, but may not be FAA approved at the time of writing. In the event of conflict with the FAA approved Airplane Flight Manual (AFM), the AFM shall supersede. The Boeing Company regards the information or procedures described herein as having a direct or indirect bearing on the safe operation of this model airplane.

THE FOLLOWING PROCEDURE AND/OR INFORMATION IS EFFECTIVE UPON RECEIPT

Background Information

Flight testing and in-service experience has revealed anomalous TCAS display behavior for airplanes with TCAS MOPS 7 software installed. The problem is limited to the relative bearing display of TCAS "other traffic" beyond 40 NM from the airplane. TCAS "other traffic" is defined as non-threat traffic that is more than six miles laterally and 1200 feet vertically from the airplane. The following anomalies have been observed:

- The relative bearing of TCAS "other traffic" targets may be erroneous for targets beyond the 40 NM range.
- Relative bearing errors of TCAS "other traffic" targets may be as large as 180 degrees and the displayed bearing positions of these targets may change abruptly.
- Bearing errors for TCAS "other traffic" targets will increase as distance of traffic from the airplane increases, and are more pronounced at relative bearings of 360, 90, 180, and 270 degrees.

This problem does not affect relative bearing accuracy of TCAS targets that are less than 40 NM from the airplane. TCAS alerting and collision avoidance logic is not affected.

Operating Instructions

If a Traffic Advisory (TA) or Resolution Advisory (RA) occurs accomplish the published Traffic Avoidance procedure. Bearing information for TCAS traffic targets beyond 40 NM may not be accurate.

Administrative Information

Insert this bulletin behind the Operations Manual Bulletin Record page in Volume 1 of your Operations Manual. Amend the Operations Manual Bulletin Record to show bulletin TBC-22 “In Effect” (IE).

This bulletin will be revised to include Service Bulletin information when available.

CS3-2897

Operations Manual Bulletin
for
The Boeing Company

The Boeing Company
Seattle, Washington 98124-2207

Number: TBC-23

Date: May 17, 2000

Document Effectivity: D6-27370-TBC

Subject: LOOK-AHEAD TERRAIN ALERTING DISPLAY ANOMALIES

Reason: To inform flight crews of display anomalies associated with GPWS look-ahead terrain alerting.

Information in this bulletin is recommended by The Boeing Company, but may not be FAA approved at the time of writing. In the event of conflict with the FAA approved Airplane Flight Manual (AFM), the AFM shall supersede. The Boeing Company regards the information or procedures described herein as having a direct or indirect bearing on the safe operation of this model airplane.

THE FOLLOWING PROCEDURE AND/OR INFORMATION IS EFFECTIVE UPON RECEIPT

Background Information

During a GPWS look-ahead terrain CAUTION or WARNING, terrain display data may be positioned inaccurately on the navigation display.

At ranges of 40 NM or greater, solid amber or solid red terrain data displays at an erroneous distance ahead of the airplane symbol. The error increases as the range selection is increased and can be up to 20 NM at the 160 NM range setting. Dotted red, dotted amber, and dotted green terrain data display correctly. Only solid amber (look-ahead terrain CAUTION active) and solid red terrain (look-ahead terrain WARNING active) data displays are affected.

In addition, display of solid amber and solid red terrain data may be delayed by 2 or 3 display sweeps after the initial terrain alert. Once displayed, solid terrain data may be removed on a subsequent display sweep.

Operating Instructions

The terrain data display is intended to serve as a situational awareness tool only. It does not provide the accuracy or fidelity on which to solely base terrain avoidance maneuvering decisions.

In the event of a look-ahead terrain CAUTION or WARNING, accomplish the appropriate Terrain Avoidance maneuver in the Non-Normal Maneuvers chapter of the QRH.

Administrative Information

Insert this bulletin behind the Operations Manual Bulletin Record page in Volume 1 of your Operations Manual. Amend the Operations Manual Bulletin Record to show bulletin TBC-23 “In Effect” (IE).

This condition is temporary until the system is modified. This bulletin will be revised to include Service Bulletin information when available.

CS3-2864

Operations Manual Bulletin
for
The Boeing Company

The Boeing Company
Seattle, Washington 98124-2207

Number: TBC-24

Date: May 17, 2000

Document Effectivity: D6-27370-TBC

Subject: GPWS 2500 FOOT VOICE CALLOUT ANOMALY

Reason: To inform flight crews that the 2500 foot radio altitude voice callout may not occur.

Information in this bulletin is recommended by The Boeing Company, but may not be FAA approved at the time of writing. In the event of conflict with the FAA approved Airplane Flight Manual (AFM), the AFM shall supersede. The Boeing Company regards the information or procedures described herein as having a direct or indirect bearing on the safe operation of this model airplane.

THE FOLLOWING PROCEDURE AND/OR INFORMATION IS EFFECTIVE UPON RECEIPT

Background Information

During an approach over water the GPWS voice callout TWENTY FIVE HUNDRED may not occur. A recent change to the Collins LRA 900 radio altimeter introduced an anomaly that may prevent some radio altimeters from reporting the 2500 foot signal to the GPWS when flying over water due to temporarily high signal strength conditions.

This bulletin applies to airplanes equipped with faulty Collins LRA 900 radio altimeters. Operators may also want to apply this bulletin to additional airplanes equipped with Collins LRA 900 radio altimeters (Part Number 822-0334-002) with serial numbers prior to 780W.

Collins Service Bulletin No. 3 (LRA 900), dated April 7, 2000, provides information on the upgrade that corrects this anomaly. It is recommended that operators contact Collins directly.

Operating Instructions

Do not rely on the voice callout TWENTY FIVE HUNDRED during an approach over water.

Administrative Information

Insert this bulletin behind the Operations Manual Bulletin Record page in Volume 1 of your Operations Manual. The attached Operations Manual Bulletin Record has been amended to show bulletin TBC-24 “In Effect” (IE).

This bulletin will be cancelled after Boeing is notified that all affected airplanes have been modified by Collins Service Bulletin No. 3.

Please send all correspondence regarding Operations Manual Bulletin Status to one of the following addresses:

Mailing Address	Manager, Flight Technical Publications 737 Model Boeing Commercial Airplane Group P.O. Box 3707 MS 20-89 Seattle, WA 98124-2207 USA
Fax:	(206) 662-7812
Telex:	329430 Station 627
SITA:	SEABO7X Station 627
E-mail:	FlightTechnicalPublications@Boeing.com

CS3-2900

Operations Manual Bulletin
for
The Boeing Company

The Boeing Company
Seattle, Washington 98124-2207

Number: TBC-27

Date: March 17, 2001

Document Effectivity: D6-27370-TBC

Subject: PSEU FAULT INDICATIONS

Reason: To inform flight crews of a configuration warning anomaly.

Information in this bulletin is recommended by The Boeing Company, but may not be FAA approved at the time of writing. In the event of conflict with the FAA approved Airplane Flight Manual (AFM), the AFM shall supersede. The Boeing Company regards the information or procedures described herein as having a direct or indirect bearing on the safe operation of this model airplane.

THE FOLLOWING PROCEDURE AND/OR INFORMATION IS EFFECTIVE UPON RECEIPT

Background Information

There have been several cases of nuisance landing configuration warnings on 737NG airplanes when flaps are retracted after takeoff. This configuration warning is the result of a malfunctioning flap position switch (S138) in the Flap Control Unit.

An internal short in the S138 switch can initiate a landing configuration warning horn which will sound intermittently or continuously and cannot be silenced by the Landing Gear Warning Cutout Switch. Condition of the S138 switch is monitored by the Proximity Switch Electronics Unit (PSEU). Current PSEU logic incorrectly identifies this fault as a dispatchable condition. Detection of an internal short in the S138 switch on the ground results in a PSEU light which will illuminate on RECALL and extinguish during Master Caution system reset. Once airborne, the internal short causes an intermittent or continuous horn that can only be silenced by extending the flaps, lowering the landing gear, or pulling the Aural Warning circuit breaker.

Operating Instructions

Pulling the Aural Warning circuit breaker is not recommended as it disables other aural warning functions including the Autopilot Disconnect warning tone and the Cabin Altitude warning horn. Flight crews experiencing an inappropriate landing configuration warning should consider a return to landing as soon as flight conditions permit.

In addition, the PSEU Non Normal Checklist has been revised to remove the Master Caution system reset step. All PSEU light illuminations will require maintenance action prior to takeoff until further notice.

Operations Manual Information

Attached is the revised PSEU Non-Normal Checklist.

Remove the current pages listed below and replace with the attached pages to your QRH.

Remove Page No.	Date	Insert Page No.	Date
NNC.15.1 - .15.2	August 30, 2000	NNC.15.1 - .15.2	March 17, 2001

Administrative Information

Insert this bulletin behind the Operations Manual Bulletin Record page in Volume 1 of your Operations Manual. Revise the Bulletin Record page to show bulletin TBC-27 “Incorporated” (INC).

This condition is temporary and a Service Bulletin with a PSEU software fix is scheduled to be released by end of second quarter 2001.

CS3-3002

Operations Manual Bulletin
for
The Boeing Company

The Boeing Company
Seattle, Washington 98124-2207

Number: TBC-29R1

Date: May 1, 2002

Document Effectivity: D6-27370-TBC

Subject: Emergency Airworthiness Directive 2001-12-51, 2002-08-52

Reason: This is a reissue of TBC-29, dated June 19, 2001, which informed flight crews of an operational limitation associated with elevator control surface vibration on 737-800 airplanes. The purpose of this reissue is to inform flight crews that this limitation now exists for the 737-600/-700/-700C and BBJ. Service Bulletin information is also provided.

Information in this bulletin is recommended by The Boeing Company, but may not be FAA approved at the time of writing. In the event of conflict with the FAA approved Airplane Flight Manual (AFM), the AFM shall supersede. The Boeing Company regards the information or procedures described herein as having a direct or indirect bearing on the safe operation of this model airplane.

THE FOLLOWING PROCEDURE AND/OR INFORMATION IS EFFECTIVE UPON RECEIPT

Background Information

In May 2001, a 737-800 airplane experienced a significant airplane vibration event associated with speed brake deployment as the airplane descended through flight level 220 at 320 knots IAS. Additionally, vibration events were experienced during the 737-900 flight test program that were attributed to a lack of sufficient damping necessary to prevent elevator tab vibration in certain flight conditions. The 737-900 elevator tab was stiffened to provide increased damping. Based on data gathered during the 737-900 flight test program, we believe it is likely that the 737-800 vibration event noted above was similar to these events. This is the only in-service event that we are aware of for 737NG airplanes in 3.5 million flight hours. The 737-800 accounts for 1.8 million of these flight hours.

Recently, a 737-700 airplane also experienced a similar vibration event associated with speedbrake deployment as the airplane descended through FL195 at an airspeed of 315 KIAS.

As a result an operational limitation as noted below has been expanded to include the 737-600/-700/-700C and BBJ airplanes until stiffened elevator tabs are installed. The new elevator tab will be incorporated in production at line number 1175, scheduled for delivery in July 2002. Retrofit of in-service airplanes per Boeing Service Bulletin 737-55A-1082 will begin in the third quarter of 2002. Boeing anticipates this corrective action will provide suffecient damping to eliminate vibration. This limitation is identical to that currently in effect for 737-800 airplanes.

Operating Instructions

The following AFM limitation will be placed on the 737-600/-700/-700C/-800 and BBJ fleet until terminated by the installation of a stiffened elevator tab:

Do not operate the airplane at speeds in excess of 300 KIAS with speedbrakes extended.

WARNING: Use of speedbrakes at speeds in excess of 320 KIAS could result in a severe vibration, which, in turn, could cause extreme damage to the horizontal stabilizer.

The FAA confirmed that in a situation requiring an Emergency Descent, the pilot in command may deviate from subject AD in accordance with the responsibility and authority provided in FAR 91.3.

Operations Manual Information

Attached are the replacement pages which reflect the revised information. Remove the pages listed below and replace with the attached pages to your Volume 1. A revised list of effective pages will be included in the next revision of your operations manual.

Remove Page No.	Date	Insert Page No.	Date
L.10.7	March 15, 2002	L.10.7	May 1, 2002

Administrative Information

This bulletin replaces bulletin TBC-29, dated June 19, 2001. Discard bulletin TBC-29. Revise the Bulletin Record page to show TBC-29 as “Cancelled” (CANC).

Insert this bulletin behind the Operations Manual Bulletin Record page in Volume 1 of your Operations Manual. Amend the Operations Manual Bulletin Record to show bulletin TBC-29R1 “Incorporated” (INC)

This bulletin will be cancelled after Boeing is notified that all affected airplanes in your fleet have been modified by Service Bulletin 737-55-1080.

Please send all correspondence regarding Operations Manual Bulletin Status to one of the following addresses:

Mailing Address	Manager, Flight Technical Publications 737 Model Boeing Commercial Airplane Group P.O. Box 3707 MS 20-89 Seattle, WA 98124-2207 USA
Fax:	(206) 662-7812
Telex:	329430 Station 627
SITA:	SEABO7X Station 627
E-mail:	FlightTechnicalPublications@Boeing.com

CS3-3145

Intentionally
Blank

Operations Manual Bulletin
for
The Boeing Company

The Boeing Company
Seattle, Washington 98124-2207

Number: TBC-30

Date: September 16, 2001

Document Effectivity: D6-27370-TBC

Subject: Inflight Start EGT Display

Reason: To inform flight crews that the inflight start EGT start limit and exceedance indications may not appear correctly below 20,000 feet.

Information in this bulletin is recommended by The Boeing Company, but may not be FAA approved at the time of writing. In the event of conflict with the FAA approved Airplane Flight Manual (AFM), the AFM shall supersede. The Boeing Company regards the information or procedures described herein as having a direct or indirect bearing on the safe operation of this model airplane.

THE FOLLOWING PROCEDURE AND/OR INFORMATION IS EFFECTIVE UPON RECEIPT

Background Information

Exhaust Gas Temperature (EGT) is normally displayed on the center instrument panel upper display unit (DU) as both a digital readout and a round dial/moving pointer indication. Maximum operating limits are indicated by redlines.

The EGT Start Limit redline is displayed during engine start when N2 is less than idle. If an exceedance is noted by the electronic engine control (EEC), the digital readout, box, pointer and indicator change color to red.

Flight testing has shown that the Exhaust Gas Temperature (EGT) Start Limit redline and associated exceedance indications may not display during inflight engine starts below 20,000 feet due to an EEC software error. An EEC software update, due early first quarter 2002, will correct the anomaly.

Operating Instructions

Monitor EGT when performing the Inflight Engine Start procedure to ensure EGT does not rise rapidly or exceed the start limit of 725°C during the start attempt.

Operations Manual Information

Attached are the replacement pages which reflect the revised information. Remove the pages listed below and replace with the attached pages to your QRH. A revised list of effective pages will be included in the next revision of your operations manual.

Remove Page No.	Date	Insert Page No.	Date
NNC.0.17	June 06, 2001	NNC.0.17	September 16, 2001
NNC.7.17	June 06, 2001	NNC.7.17	September 16, 2001

Administrative Information

Insert this bulletin behind the Operations Manual Bulletin Record page in QRH of your Operations Manual. Amend the Operations Manual Bulletin Record to show bulletin TBC-30 “Incorporated” (INC). This condition is temporary until the system is modified.

This bulletin will be revised to include Service Bulletin information when available.

CS3-3075

Operations Manual Bulletin
for
The Boeing Company

The Boeing Company
Seattle, Washington 98124-2207

Number: TBC-32

Date: February 15, 2002

Document Effectivity: D6-27370-TBC

Subject: Deicing/Anti-icing Procedures

Reason: To advise flight crews to cycle the control column following any deicing/anti-icing operations.

Information in this bulletin is recommended by The Boeing Company, but may not be FAA approved at the time of writing. In the event of conflict with the FAA approved Airplane Flight Manual (AFM), the AFM shall supersede. The Boeing Company regards the information or procedures described herein as having a direct or indirect bearing on the safe operation of this model airplane.

THE FOLLOWING PROCEDURE AND/OR INFORMATION IS EFFECTIVE UPON RECEIPT

Background Information

Boeing has received multiple reports of airplane vibration events that were possibly due to excessive fluid trapped inside the elevator balance area. In these events, the airplane had been deiced to remove snow buildup, then anti-iced during snowy conditions prior to departure. After the completion of some of the flights, fluid was observed dripping from the elevator balance bay area, suggesting that fluid may have been trapped inside the balance bays.

As a result of these reports, testing was conducted to observe the fluid drainage capability of the elevator balance bay area using both water and thickened aircraft ground deicing/anti-icing fluid. These tests indicate that these fluids have numerous paths to drain. It was also demonstrated that cycling the elevators between full up and full down following any deicing/anti-icing provides additional opportunities for fluids to drain from the elevator balance bay area. Trimming the stabilizer to the full APL NOSE DOWN position prior to deicing/anti-icing, in accordance with the Adverse Weather Supplementary Procedures, further minimizes the opportunity for fluid to enter the elevator balance panel area through the elevator vent gaps.

Operating Instructions

After any deicing/anti-icing operation, slowly cycle the control column full forward to full aft a minimum of three (3) times to drain residual fluid from the elevator balance bay. This should be accomplished with the stabilizer set to the full APL NOSE DOWN position (stabilizer leading edge up).

Note: Ensure the stabilizer is re-set to the proper setting for takeoff.

Administrative Information

Insert this bulletin behind the Operations Manual Bulletin Record page in Volume 1 of your Operations Manual. Amend the Operations Manual Bulletin Record to show bulletin TBC-32 “In Effect” (IE).

The information contained in this bulletin will be incorporated into a future revision of the Operations Manual. The bulletin will be cancelled at that time.

CS3-3126

Operations Manual Bulletin
for
The Boeing Company

The Boeing Company
Seattle, Washington 98124-2207

Number: TBC-33

Date: May 15, 2002

Document Effectivity: D6-27370-TBC

Subject: Airworthiness Directive 2002-08-20

Reason: This bulletin notifies flight crews of operational limitations and Non-Normal procedures associated with elevator control surface vibration (Limit Cycle Oscillation) on the 737-600/-700/-700C/-800 and BBJ following deicing/anti-icing operations.

Information in this bulletin is recommended by The Boeing Company, but may not be FAA approved at the time of writing. In the event of conflict with the FAA approved Airplane Flight Manual (AFM), the AFM shall supersede. The Boeing Company regards the information or procedures described herein as having a direct or indirect bearing on the safe operation of this model airplane.

THE FOLLOWING PROCEDURE AND/OR INFORMATION IS EFFECTIVE UPON RECEIPT

Background Information

Boeing has received reports of incidents of severe airframe vibration (limit cycle oscillation) on 737-600/-700/-800 airplanes after the horizontal stabilizer had been deiced/anti-iced. These events have been attributed to accumulation of deicing/anti-icing fluid or other residue inside the elevator balance bay and on the exterior surfaces of the elevator tab. The accumulation of fluid in the balance bays has been attributed to inadequate drainage provisions. A previous Operations Manual Bulletin provided recommendations to the flight crew to help reduce accumulation of fluid in the elevator balance bays by ensuring the stabilizer is trimmed to the full APL NOSE DOWN position prior to any deicing/anti-icing operations, in accordance with the B737 Adverse Weather Supplementary Procedures. Following application of deicing/anti-icing fluid, the control column should be cycled slowly full forward to full aft a minimum of three times to help drain residual fluid from the elevator balance bay.

Boeing believes these limit cycle oscillation (LCO) events can be attributed to a lack of sufficient elevator tab damping to prevent elevator tab vibration in certain flight conditions. An elevator tab LCO is characterized by a high frequency (approximately 40 Hz) resonant vibration. This vibration originates, and is strongest, in the aft part of the airplane, but can be felt in the entire structure. It may or may not be felt in the control wheel. If the flight deck door is open, the vibration can be heard coming from the back of the airplane. In addition, aft cabin personnel will notice a strong vibration.

Operational limitations as noted below will be required for the 737-600/-700/-700C/-800 and BBJ airplanes following deicing/anti-icing until stiffened elevator tabs are installed. The new elevator tab will be incorporated in production at line number 1175, scheduled for delivery in July 2002. Retrofit of in-service airplanes per Boeing Service Bulletin 737-55A1080 will begin in the third quarter of 2002. Boeing anticipates this corrective action will provide sufficient damping to eliminate vibration. Flight test of the new elevator tabs was completed in April 2002.

In the interim, Service Bulletin 737-55A1084 has been released to improve draining of fluid from the elevator balance bay area and to help reduce the accumulation of fluid. Service Letter 737-SL-55-021 has been released to periodically clean the external surface of the elevator tab. Service Letter 737-SL-12-017 provides cleaning instructions for the elevator balance bays.

The effects of airframe vibration can be cumulative and can affect the life of the airframe. After completion of a flight during which a suspected ice-related airframe vibration is encountered, the flight crew is encouraged to complete a vibration report. An example of a flight deck vibration event log can be found in 737-SL-02-2002-D, dated July 3, 2001.

Operating Instructions

After any ground deicing/anti-icing of the horizontal stabilizer, airspeed must be limited to 270 KIAS for all follow-on flights until the applicable maintenance procedures have been accomplished. Mach limits are not affected. Once the applicable maintenance procedures have been accomplished, exceeding 270 KIAS is permissible only until the next deicing/anti-icing.

The speed restrictions and maintenance requirements remain in effect until the new stiffened elevator tabs are installed.

If a limit cycle oscillation (LCO) is suspected in flight for any reason, immediately reduce airspeed to 270 KIAS, or until the vibration ceases, whichever indicated airspeed is lower. Do not use speedbrakes or change configuration to reduce airspeed. Remain at or below the indicated airspeed at which the vibration ceased for the remainder of the flight, but do not exceed 270 KIAS. Do not use

speedbrakes for the remainder of the flight. Evaluate the need to land at the nearest practicable airport. Landing airport selection should be based on all pertinent factors such as weather, distance to destination, range available at the reduced airspeed, maximum landing weight and possible airframe damage. Ground spoilers may be used for landing.

In a situation requiring an Emergency Descent, the pilot in command may deviate from the 270 KIAS airspeed restriction and may use speedbrakes as required. As is standard policy, if structural integrity is in doubt, limit speed as much as possible and avoid high maneuvering loads.

In the event a non-normal procedure must be performed that requires a higher airspeed (e.g., PACK/PACK TRIP OFF, etc.) the pilot in command may deviate from the 270 KIAS airspeed restriction as necessary to comply with the non-normal checklist.

Operations Manual Information

Attached are the replacement pages which reflect the revised information. Remove the pages listed below and replace with the attached pages to your QRH. A revised list of effective pages will be included in the next revision of your operations manual.

Remove Page No.	Date	Insert Page No.	Date
NNC.TOC.9.1	March 15, 2002	NNC.TOC.9.1	May 15, 2002
NNC.9.22	March 15, 2002	NNC.9.22	May 15, 2002

The following information will be included in the Limitations section of your Volume 1 in the next revision of the Operations Manual. This information will also be added to the Limitations chapter of the Airplane Flight Manual.

> After any ground deicing/anti-icing of the horizontal stabilizer, airspeed must be limited to 270 KIAS until the crew has been informed that applicable maintenance procedures have been accomplished that would allow exceedance of 270 KIAS. Once the applicable maintenance procedures have been accomplished, exceeding 270 KIAS is permissible only until the next deicing/anti-icing.

Administrative Information

Insert this bulletin behind the Operations Manual Bulletin Record page in Volume 1 of your Operations Manual. Amend the Operations Manual Bulletin Record to show bulletin TBC-33 “Incorporated” (INC).

This bulletin will be cancelled after Boeing is notified that all affected airplanes in your fleet have been modified by Service Bulletin 737-55A1080.

Please send all correspondence regarding Operations Manual Bulletin Status to one of the following addresses:

Mailing Address	Manager, Flight Technical Publications 737 Model Boeing Commercial Airplane Group P.O. Box 3707 MS 20-89 Seattle, WA 98124-2207 USA
Fax:	(206) 662-7812
Telex:	329430 Station 627
SITA:	SEABO7X Station 627
E-mail:	FlightTechnicalPublications@Boeing.com

CS3-3133

Operations Manual Bulletin
for
The Boeing Company

The Boeing Company
Seattle, Washington 98124-2207

Number: TBC-34

Date: August 2, 2002

Document Effectivity: D6-27370-TBC

Subject: FMC MAP Display Blanking with FMC Update U10.3, U10.4 and U10.4A software.

Reason: This bulletin notifies flight crews that FMC MAP display blanking has been experienced on 737 airplanes with FMC Update U10.3, U10.4 and U10.4A software installed.

Information in this bulletin is recommended by The Boeing Company, but may not be FAA approved at the time of writing. In the event of conflict with the FAA approved Airplane Flight Manual (AFM), the AFM shall supersede. The Boeing Company regards the information or procedures described herein as having a direct or indirect bearing on the safe operation of this model airplane.

THE FOLLOWING PROCEDURE AND/OR INFORMATION IS EFFECTIVE UPON RECEIPT

Background Information

Since January 2002, several operators with FMC U10.3, U10.4 and U10.4A software installed on their 737 airplanes have reported blanking of the FMC MAP display during approach at a limited number of airports. These MAP blanking events appear to occur without pilot action and are unrecoverable by manual switching.

There have also been reports of MAP RANGE DISAGREE and MAP FAIL anomalies induced when mode/range changes are made on the EFIS control panel during approach. These failures affect one or both MAP displays. The majority of these events have been recoverable.

The FMC U10.5 software upgrade scheduled for third quarter/early fourth quarter 2002 is expected to correct both of these anomalies.

Operating Instructions

Minimize MAP mode/range changes during approach with FMC Update U10.3, U10.4 or U10.4A software installed. If unrecoverable MAP display blanking occurs, use the other pilot's MAP display and/or conventional means of navigation and land as soon as practicable. After landing, have maintenance recycle power to the FMC.

Administrative Information

Insert this bulletin behind the Operations Manual Bulletin Record page in Volume 1 of your Operations Manual. Amend the Operations Manual Bulletin Record to show bulletin TBC-34 "In Effect" (IE).

This bulletin will be cancelled after Boeing is notified that all affected airplanes in your fleet have been updated to FMC Update U10.5 software.

Please send all correspondence regarding Operations Manual Bulletin Status to one of the following addresses:

Mailing Address	Manager, Flight Technical Publications 737 Model Boeing Commercial Airplane Group P.O. Box 3707 MS 20-89 Seattle, WA 98124-2207 USA
Fax:	(206) 662-7812
Telex:	329430 Station 627
SITA:	SEABO7X Station 627
E-mail:	FlightTechnicalPublications@Boeing.com

CS3-3171

Operating Limitations L.10.1
General L.10.1
Airplane General L.10.1
Operational Limitations L.10.1
Weight Limitations L.10.3
Air Systems L.10.4
Pressurization L.10.4
Anti–Ice, Rain L.10.4
Autopilot/Flight Director System L.10.4
HUD System L.10.6
Communications L.10.6
Aircraft Communications Addressing and Reporting System L.10.6
Engines and APU L.10.7
Engine Limit Display Markings L.10.7
Engine Ignition L.10.7
Reverse Thrust L.10.7
APU L.10.7
Flight Controls L.10.8
Flight Management, Navigation L.10.8
Air Data Inertial Reference Unit (ADIRU) L.10.8
QFE Selection L.10.8
Navigational Equipment L.10.8
Look-Ahead Terrain Alerting (GPWS) L.10.9
Fuel System L.10.9
Landing Gear L.10.9

Copyright © The Boeing Company. See title page for details.

Intentionally
Blank

Copyright © The Boeing Company. See title page for details.

General

This chapter contains Airplane Flight Manual (AFM) limitations and Boeing recommended operating limitations. Limitations that are obvious, shown on displays or placards, or incorporated within an operating procedure are not contained in this chapter.

Airplane General

Operational Limitations

Runway slope	+/– 2%
Maximum Takeoff and Landing Tailwind Component	[Option - 15 kt tailwind] 15 knots [Option - 10 kt tailwind] 10 knots
Maximum speeds	Observe gear and flap placards
Maximum Operating Altitude	41,000 ft
Maximum Takeoff and Landing Altitude	[Option - Typical] 8,400 ft [Option - High altitude landing system] 12,000 ft

[Option - Without polar navigation]
Maximum flight operating latitude – 82° North and 82° South, except for the region between 80° West and 130 ° West longitude, the maximum flight operating latitude is 70° North, and the region between 120° East and 160° East longitude, the maximum flight operating latitude is 60° South.

Installation of handle covers on the overwing exits must be verified prior to departure whenever passengers are carried.

[Option - Photoluminescent Floor Emergency Lighting]
Photoluminescent Floor Emergency Lighting must be charged in accordance with approved procedures.

Copyright © The Boeing Company. See title page for details.

Narrow Runway (30 M) Operation

[Option - 30 Meter Wide Runway]

The maximum crosswind component at 10 meter (32.8 feet) height for takeoff and landing is:

Model	Dry Runway	Wet Runway	Snow Covered (No Melting)	Flooded Runway	Icy Runway
737-600	26 knots	16 knots	12 knots	6 knots	4 knots
737-700	24 knots	13 knots	11 knots	4 knots	*
737-800	27 knots	16 knots	15 knots	10 knots	4 knots
* Operation Not Recommended					

Runway centerline shall be clearly visible in the prevailing conditions.

Note: Consult AFM-DPI (Alternate Performance) for adjustment to V1(MCG) based on 20 foot deviation from runway centerline. An adjustment to Maximum Takeoff Weight and Takeoff Speeds may also be required.

[Option - 737-600/-700 airplanes with engine performance restrictions]
Note: See AFM Appendix for Aft CG curtailments which may further restrict airplane takeoff envelope.

Non–AFM Operational Information

Note: The following items are not AFM limitations, but are provided for flight crew information.

On revenue flights, the escape slide retention bar (girt bar) must be installed during taxi, takeoff and landing.

[Option - Winglets]
The maximum demonstrated takeoff and landing crosswind is 33 knots.

[Option - No winglets]
The maximum demonstrated takeoff and landing crosswind is 36 knots.

Altitude Display Limits for RVSM Operations

Standby altimeters do not meet altimeter accuracy requirements of RVSM airspace.

The maximum allowable in-flight difference between Captain and First Officer altitude displays for RVSM operations is 200 feet.

The maximum allowable on-the-ground altitude display differences for RVSM operations are:

Copyright © The Boeing Company. See title page for details.

Field Elevation	Max Difference Between Captain & F/O	Max Difference Between Captain or F/O & Field Elevation
Sea Level to 5,000 feet	50 feet	75 feet
10,000 feet	60 feet	75 feet

Weight Limitations

[Option - Typical 737-600]

Weights	Pounds / Kilograms
Maximum Taxi Weight	127,500 / 57,832
Maximum Takeoff Weight	127,000 / 57,606
Maximum Landing Weight	120,500 / 54,657
Maximum Zero Fuel Weight	114,000 / 51,709

[Option - Typical 737-700]

Weights	Pounds / Kilograms
Maximum Taxi Weight	133,500 / 60,554
Maximum Takeoff Weight	133,000 / 60,327
Maximum Landing Weight	128,000 / 58,059
Maximum Zero Fuel Weight	120,500 / 54,657

[Option - Typical 737-700 with CFM56-7B26 Thrust]

Note: Minimum Takeoff Weight – 125,000 lbs. / 56,699 kgs.
Lower minimum takeoff weights that account for the actual pressure altitude and outside air temperature may be obtained by using the Minimum Takeoff Weight table in the Takeoff section of the Performance Dispatch (PD) chapter.

[Option - Typical 737-800]

Weights	Pounds / Kilograms
Maximum Taxi Weight	156,000 / 70,760
Maximum Takeoff Weight	155,500 / 70,533
Maximum Landing Weight	144,000 / 65,317
Maximum Zero Fuel Weight	136,000 / 61,688

Copyright © The Boeing Company. See title page for details.

[Option - Typical 737-900]

Weights	Pounds / Kilograms
Maximum Taxi Weight	174,700 / 79,242
Maximum Takeoff Weight	174,200 / 79,015
Maximum Landing Weight Maximum Landing Weight (Flaps 15 *)	146,300 / 66,360 144,200 / 65,407
Maximum Zero Fuel Weight	138,300 / 62,731

* This maximum weight applies when landing with Flaps 15 under normal conditions. It does not apply when Flaps 15 is required during a Non-Normal Checklist.

Air Systems

Pressurization

The maximum cabin differential pressure (relief valves) is 9.1 psi.

Non–AFM Operational Information

With engine bleed air switches ON, do not operate the air conditioning packs in HIGH for takeoff, approach or landing.

Anti–Ice, Rain

Engine TAI must be on when icing conditions exist or are anticipated, except during climb and cruise below -40°C SAT.

[Option - 737-600/-700/-800 without stiffened elevator tabs]
(PRR 38506 or Service Bulletin 737-55A1080)
After any ground deicing/anti-icing of the horizontal stabilizer, airspeed must be limited to 270 KIAS until the crew has been informed that applicable maintenance procedures have been accomplished that would allow exceedance of 270 KIAS. Once the applicable maintenance procedures have been accomplished, exceeding 270 KIAS is permissible only until the next deicing/anti-icing.

Autopilot/Flight Director System

Do not engage the autopilot for takeoff below 400 feet AGL.

[Option - High altitude landing system]
Do not use the autopilot below 100 feet radio altitude at airport pressure altitudes above 8,400 feet.

Copyright © The Boeing Company. See title page for details.

[Option - JAA rules]
The autopilot must be disengaged before the airplane descends more than 50 feet below the minimum descent altitude (MDA) unless it is coupled to an ILS glide slope and localizer or in the go-around mode.

[Option - Typical, 737-800, JAA rules]
The Minimum Use Height (MUH) for single channel autopilot operation is defined as 158 feet AGL.

[Option - FAA rules]
For single channel operation, the autopilot shall not be engaged below 50 feet AGL.

Use of aileron trim with the autopilot engaged is prohibited.

[Option - Typical, FAA rules, 15 kt tailwind]
Maximum allowable wind speeds when landing weather minima are predicated on autoland operations:

- Headwind 25 knots
- Crosswind 20 knots
- Tailwind 15 knots.

[Option - Typical, JAA rules, Cat II or Cat III]
Maximum allowable wind speeds, when conducting a dual channel Cat II or Cat III landing predicated on autoland operations, are:

- Headwind 25 knots
- Crosswind 20 knots
- Tailwind:

[Option - Typical 737-900, 10 kt tailwind]

Field Elevation	Flaps 30	Flaps 40
2000 feet or less	10 knots	10 knots
2001 to 4000 feet	10 knots	10 knots
4001 to 6000 feet	5 knots	10 knots
Greater than 6000 feet	0 knots	10 knots

Copyright © The Boeing Company. See title page for details.

[Option - Typical 737-900, 15 kt tailwind]

Field Elevation	Flaps 30	Flaps 40
2000 feet or less	15 knots	15 knots
2001 to 4000 feet	10 knots	15 knots
4001 to 6000 feet	5 knots	15 knots
Greater than 6000 feet	0 knots	15 knots

HUD System

[Option - Head-Up Display]

[Option - HUD 2350 with winglets or HUD 4000]
AIII mode approach and landings are not approved.

[Option - HUD 2350, No winglets]
For manual CAT II or CAT IIIA approach and landing, AIII mode must be selected and the autopilot (A/P) and autothrottle (A/T) must be disengaged prior to 500 feet above TDZE.

[Option - With polar navigation]
Do not use at latitudes greater than 85 degrees latitude.

Communications

[Option - With VHF-3, ACARS or audio entertainment system, and without Voice Mode Protection]
Do not use VHF–3 for ATC communications with ACARS operational, or if audio entertainment system is in use.

Aircraft Communications Addressing and Reporting System

[Option - ACARS]

The ACARS is limited to the transmission and receipt of messages that will not create an unsafe condition if the message is improperly received, such as the following conditions:

- the message or parts of the message are delayed or not received,
- the message is delivered to the wrong recipient, or
- the message content may be frequently corrupted.

However, Pre-Departure Clearance, Digital Automatic Terminal Information Service, Oceanic Clearances, Weight and Balance and Takeoff Data messages can be transmitted and received over ACARS if they are verified per approved operational procedures.

Copyright © The Boeing Company. See title page for details.

Non–AFM Operational Information

Use the VHF radio connected to the top of fuselage antenna for primary ATC communications on the ground.

Engines and APU

Engine Limit Display Markings

Maximum and minimum limits are red.

Caution limits are amber.

Engine Ignition

Engine ignition must be on for:

- takeoff
- landing
- operation in heavy rain
- anti-ice operation.

Reverse Thrust

Intentional selection of reverse thrust in flight is prohibited.

APU

[Option - Typical JAA]
APU bleed + electrical load: max alt 10,000 ft.

[Option - Typical FAA]
Inflight - APU bleed + electrical load: max alt 10,000 ft.

[Option - Typical FAA]
Ground only - APU bleed + electrical load: max alt 15,000 ft.

APU bleed: max alt 17,000 ft.

APU electrical load: max alt 41,000 ft.

Non–AFM Operational Information

APU bleed valve must be closed when:

- ground air connected and isolation valve open
- engine no. 1 bleed valve open
- isolation and engine no. 2 bleed valves open.

APU bleed valve may be open during engine start, but avoid engine power above idle.

Do not start or shut down APU during refueling operations.

Copyright © The Boeing Company. See title page for details.

Flight Controls

Max flap extension altitude is 20,000 ft.

Holding in icing conditions with flaps extended is prohibited.

Do not deploy the speedbrakes in flight at radio altitudes less than 1,000 feet.

[Option - 737-600/-700/-800 without stiffened elevator tabs]
(PRR 38506 or Service Bulletin 737-55A1080)
Do not operate the airplane at speeds in excess of 300 KIAS with speedbrakes extended.

WARNING: Use of speedbrakes at speeds in excess of 320 KIAS could result in a severe vibration, which, in turn, could cause extreme damage to the horizontal stabilizer.

In flight, do not extend the SPEED BRAKE lever beyond the FLIGHT DETENT.

Non–AFM Operational Information

Alternate flap duty cycle:

Flap Position	Minutes Off
0 – 15	5
greater than 15	25

Flight Management, Navigation

Air Data Inertial Reference Unit (ADIRU)

ADIRU alignment must not be attempted at latitudes greater than 78 degrees 15 minutes.

QFE Selection

The use of LNAV and VNAV with QFE selected is prohibited.

[Option - Altimeter with QFE]
A QFE altitude reference for the PFDs must be selected in the FMS whenever QFE is used instead of QNH.

[Option - Altimeter with QFE]
QFE operations are prohibited if the option for QFE altitude reference selection is not installed in the FMS.

Navigational Equipment

Non–AFM Operational Information

Do not operate weather radar during fueling, near fuel spills or people.

Copyright © The Boeing Company. See title page for details.

Look-Ahead Terrain Alerting (GPWS)

Do not use the terrain display for navigation.

Do not use the look-ahead terrain alerting and terrain display functions:

- within 15 nm of takeoff, approach or landing at an airport not contained in the GPWS terrain database

Note: Refer to Honeywell Document 060-4267-000 for airports contained in the installed GPWS terrain database.

Fuel System

The use of Wide Cut Fuels per Class B of GE Specification D50TF2, JP-4 or Jet B, is prohibited.

Maximum tank fuel temperature: 49°C.

Minimum inflight tank fuel temperature: 3°C above the freezing point of the fuel being used or -43°C, whichever is higher.

Allowable lateral imbalance between main tanks 1 and 2 must be scheduled to be zero. Random fuel imbalance must not exceed 1000 lbs / 453 kgs for taxi, takeoff, flight or landing.

Fuel crossfeed valve must be closed for takeoff and landing.

Main tanks 1 and 2 must be full if center tank contains more than 1000 lbs / 453 kgs.

Landing Gear

Operation with assumed temperature reduced takeoff thrust is not permitted with anti-skid inoperative.

[Option - JAA rules]
Towbarless towing operations are restricted to tow vehicles that are designed and operated to preclude damage to the airplane steering system or which provide a reliable and unmistakable warning when damage to the steering system may have occurred.

Non–AFM Operational Information

Do not apply brakes until after touchdown.

Copyright © The Boeing Company. See title page for details.

Intentionally
Blank

Copyright © The Boeing Company. See title page for details.

DO NOT USE FOR FLIGHT

Introduction NP.10.1

General NP.10.1

Controls and Indications – Nomenclature NP.10.1

Normal Procedures NP.10.1

Autopilot Flight Director System and Flight Management System Monitoring NP.10.3

CDU Operation NP.10.3

Panel Scan Diagram NP.10.4

Pilot Flying/Taxiing and Pilot Not Flying/Not Taxiing Areas of Responsibility NP.10.5

Amplified Procedures NP.20.1

Exterior Safety Inspection – Captain or First Officer NP.20.1

Flight Deck Safety Inspection – Captain or First Officer NP.20.1

Preliminary Flight Deck Preparation – Captain or First Officer NP.20.2

Exterior Inspection NP.20.5

Flight Deck Preparation – Captain or First Officer. NP.20.8

Flight Deck Preparation – Captain NP.20.9

Flight Deck Preparation – First Officer NP.20.19

Final Flight Deck Preparation – Captain and First Officer NP.20.24

Engine Start Procedure NP.20.25

After Start Procedure NP.20.27

Pushback or Tow Out Procedure. NP.20.28

Before Takeoff Procedure NP.20.29

Takeoff Procedure NP.20.31

After Takeoff Procedure NP.20.32

Takeoff Flap Retraction Speed Schedule NP.20.33

Copyright © The Boeing Company. See title page for details.

Climb and Cruise Procedure NP.20.34
Descent and Approach Procedure NP.20.35
Approach Procedure NP.20.36
Landing Procedure. NP.20.37
Go–Around Procedure. NP.20.38
Landing Roll Procedure. NP.20.39
Taxi In Procedure NP.20.40
Shutdown Procedure NP.20.41
Secure Procedure. NP.20.42

Flight Patterns NP.30.1

Takeoff. NP.30.1
ILS Approach NP.30.2
Instrument Approach using VNAV NP.30.3
Instrument Approach using V/S NP.30.4
Circling Approach NP.30.5
Visual Traffic Pattern. NP.30.6

Copyright © The Boeing Company. See title page for details.

DO NOT USE FOR FLIGHT

General

This chapter contains Normal Procedures. The first section incorporates routine normal procedures and associated flight patterns. The second section incorporates supplementary procedures that are accomplished as required rather than routinely performed.

Controls and Indications – Nomenclature

Controls and indications appear in all UPPERCASE type to correspond to the words on the control panel or display. For example, the following item has UPPERCASE words to match what is found on the panel:

EQUIPMENT COOLING switches ..... NORMAL

The word EQUIPMENT is spelled out, even though it is abbreviated on the panel.

The following appears in all lower case because there are no words identifying the panel name.

Engine display control panel ..... Set

Normal Procedures

Normal procedures are used by the trained flight crew to ensure airplane condition is acceptable and that the flight deck is correctly configured for each phase of flight. These procedures assume all systems are operating normally and automated features are fully utilized.

Procedures are performed from recall and follow a panel flow. Checklists are used to verify that critical items affecting safety have been accomplished. These procedures are designed to minimize crew workload and are consistent with flight deck technology.

During accomplishment of procedures, it is the crew member's responsibility to ensure proper system response. If an improper indication is noted, first verify that the system controls are properly positioned. Then, if necessary, check the appropriate circuit breaker(s), and test related system light(s.)

Before engine start, individual system lights are used to verify system status. If an individual system light is indicating an improper condition prior to engine start, determine if the condition may affect dispatch and require maintenance action or compliance with the Minimum Equipment List (MEL.)

Copyright © The Boeing Company. See title page for details.

After engine start, the MASTER CAUTION system, annunciator lights, and alerts are used as the primary means to alert the crew to a non-normal system condition. Illumination of the MASTER CAUTION and system annunciator lights requires accomplishment of the appropriate non–normal procedure. Upon completion of the procedure and prior to takeoff, the Dispatch Deviations Guide (DDG) or airline equivalent should be consulted to determine if MEL relief is available.

Flight crew duties are organized in accordance with an area of responsibility concept. Each crewmember is assigned a flight deck area where the crewmember initiates actions for required procedures.The panel illustrations in this section describe each crewmember's area of responsibility for pre/post flight and phase of flight.

Pre/post flight duties are apportioned between the captain and first officer, while phase of flight duties are apportioned between the Pilot Flying (PF) and Pilot Not Flying (PNF.) A normal scan flow is encouraged; however, certain items may be handled in the most logical sequence for existing conditions. Actions outside the crew member's area of responsibility are initiated at the direction of the captain. General phase of flight responsibilities are as follows:

Pilot flying (PF):

- flight path and airspeed control
- airplane configuration
- navigation.

Pilot not flying (PNF):

- checklist reading
- communications
- tasks requested by PF
- start levers and fire switches (with PF concurrence.)

Phase of flight duties, beginning with the Takeoff Procedure and ending with completion of the Landing Roll Procedure, are presented in table form in the appropriate procedures section.

The first officer, when flying the airplane, performs the duties listed under PF, and the captain performs those duties listed under PNF.

Note: Although the mode control panel is designated as the PF's responsibility, the PNF should operate the controls on the mode control panel at the direction of the PF when the airplane is being flown manually.

The captain retains final authority for all actions directed and performed.

Copyright © The Boeing Company. See title page for details.

Autopilot Flight Director System and Flight Management System Monitoring

When the autopilot, flight director, or autothrottles are in use and a mode change is selected or is scheduled to occur, the annunciation must be verified on the flight mode annunciation display. Airplane course, vertical path, and speed must always be monitored.

Similarly, when a thrust mode change is selected or is scheduled to occur, the annunciation must be verified on the thrust mode display.

In LNAV and VNAV, all airplane course, vertical path, thrust and speed changes must be verified.

CDU Operation

On the ground, the control display unit (CDU) entries are normally performed by the first officer and verified by the captain.

In flight, CDU entries are normally accomplished by the pilot not flying and verified by the pilot flying prior to execution. CDU entries should be accomplished prior to high workload periods such as departure, arrival, or holding. During high workload periods, using the autopilot modes such as heading select, level change, and the altitude and speed intervention features, if available, may be more efficient than entering complex route modifications into the CDU.

Copyright © The Boeing Company. See title page for details.

DO NOT USE FOR FLIGHT

Panel Scan Diagram

The diagram below describes each crew member's area of responsibility and scan flow pattern for each panel when the airplane is not moving under its own power.

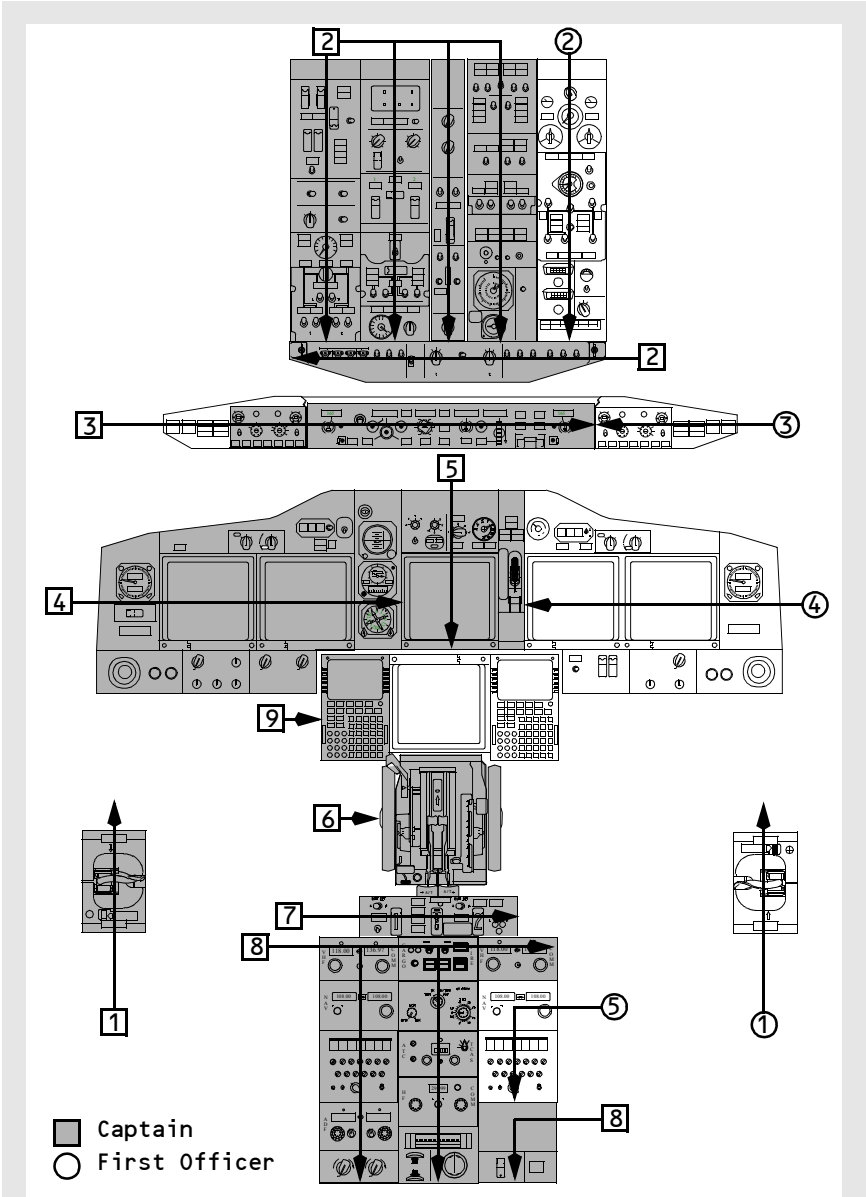

Copyright © The Boeing Company. See title page for details.

Pilot Flying/Taxiing and Pilot Not Flying/Not Taxiing Areas of Responsibility

The diagram below describes each crew member's area of responsibility for each panel when the airplane is moving under its own power.

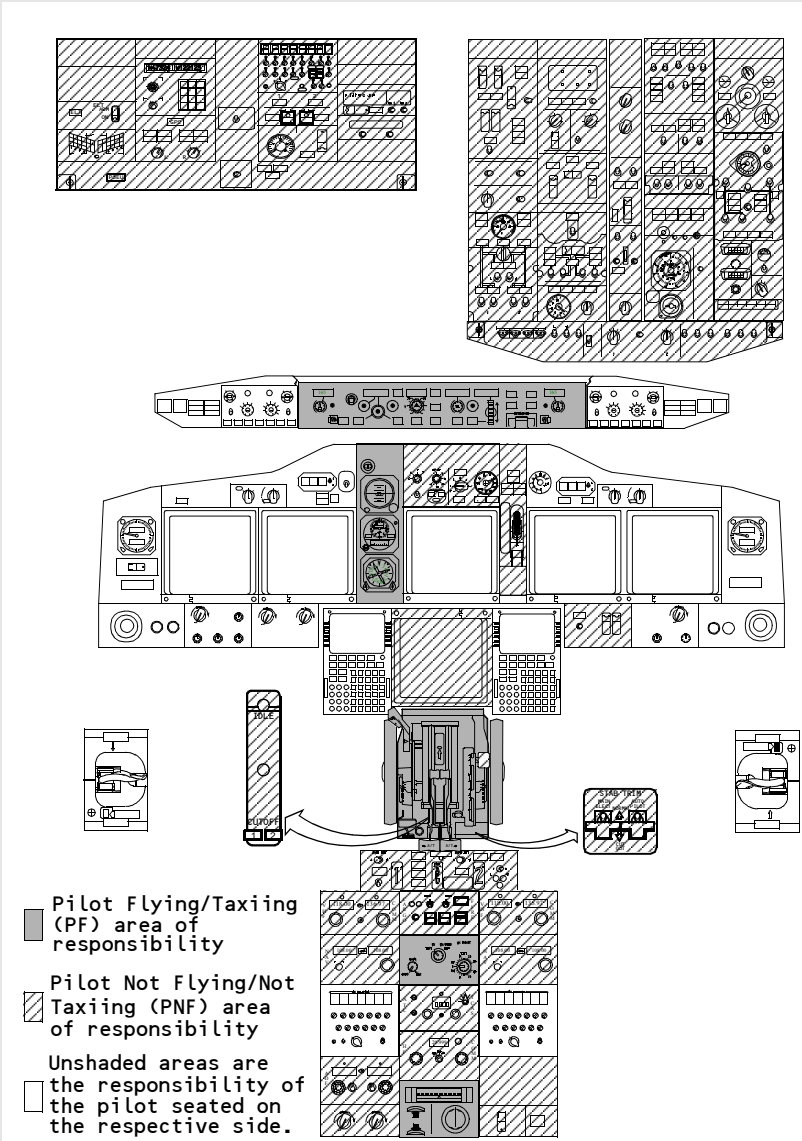

Copyright © The Boeing Company. See title page for details.

Intentionally
Blank

Copyright © The Boeing Company. See title page for details.

Exterior Safety Inspection – Captain or First Officer

Surfaces and chocks ..... Check

Visually check that all movable surfaces are clear and the chocks are in place.

Maintenance status ..... Check

Verify maintenance status is acceptable for flight and ensure agreement with authorized dispatch deviations if required.

Flight Deck Safety Inspection – Captain or First Officer

Perform the following checks prior to assuming normal crew positions.

BATTERY switch ..... ON

Guard – Down

ELECTRIC HYDRAULIC PUMP switches ..... OFF

LANDING GEAR lever ..... DN

All green landing gear indicator lights – Illuminated

Copyright © The Boeing Company. See title page for details.

Preliminary Flight Deck Preparation – Captain or First Officer

GROUND POWER switch (if ground power is available) ..... ON

SOURCE OFF lights – Extinguished

Fault/Inop detection ..... Check

OVERHEAT DETECTOR switches – NORMAL

TEST switch – Hold to FAULT/INOP

Verify MASTER CAUTION, OVHT/DET annunciator, FAULT and APU DET INOP lights are illuminated.

If the FAULT light fails to illuminate, the fault monitoring system is inoperative.

If APU DET INOP light fails to illuminate, do not operate APU.

Fire/Overheat warning ..... Check

Note: Alert ground personnel before this test is accomplished with the APU operating. The fire warning light flashes and the horn sounds on the APU ground control panel.

TEST switch – Hold to OVHT/FIRE

Verify fire warning bell sounds, master FIRE WARN lights, MASTER CAUTION lights and OVHT/DET annunciator illuminate.

Master FIRE WARNING light – Push

Verify master FIRE WARN lights and fire warning bell cancel.

Verify engine No. 1, APU, and engine No. 2 fire warning switch and engine No. 1 and engine No. 2 OVERHEAT lights are illuminated. If AC busses are powered, verify WHEEL WELL fire warning light is illuminated.

If an engine fire warning switch and an ENG OVERHEAT light do not illuminate, a detection loop is inoperative.

EXTINGUISHER TEST switch ..... Check

Copyright © The Boeing Company. See title page for details.

Position TEST Switch to 1, verify the green extinguisher test lights are illuminated. Release switch and verify the lights are extinguished. Repeat for test position 2.

APU .....Start & on busses

When the APU GEN OFF BUS light illuminates:

APU GENERATOR bus switches – ON

SOURCE OFF lights – Extinguished

Note: It is recommended that the APU be operated for one minute before using as a bleed air source.

FLAP lever .....Set

Position the FLAP lever to agree with the FLAPS position indicator.

CARGO FIRE system ..... Check

DETECTOR SELECT switches – NORM

TEST switch – Push

Verify fire warning bell sounds and master FIRE WARN lights illuminate.

Master FIRE WARN light – Push

Verify master FIRE WARN lights and fire warning bell cancel.

Verify cargo fire (FWD, AFT) warning lights are illuminated.

Verify DETECTOR FAULT light remains extinguished.

Note: If a cargo fire warning light does not illuminate and the DETECTOR FAULT light illuminates, a detection loop is inoperative.

Verify the green EXTINGUISHER test lights are illuminated.

Verify the cargo fire bottle DISCHARGE light is illuminated.

Manual gear extension access door .....Closed

Emergency equipment ..... Check

Copyright © The Boeing Company. See title page for details.

Fire extinguisher – Check and stow

Verify safetied.

Circuit breakers (P–6) ..... Check

Verify circuit breakers are in or collared in compliance with dispatch requirements.

[Option]
VOICE RECORDER switch ..... As required

Flight recorder ..... Test

FLIGHT RECORDER OFF light – Illuminated

FLIGHT RECORDER test switch – TEST

FLIGHT RECORDER OFF light – Extinguished

FLIGHT RECORDER test switch – NORMAL

MACH AIRSPEED WARNING TEST switches ..... Push

Verify clacker sounds.

STALL WARNING TEST switches ..... Push

Verify control column vibration when each switch is pushed.

Note: The stall warning test requires that AC transfer busses are powered for up to 4 minutes.

Note: With hydraulic power off, the leading edge flaps may droop enough to cause an asymmetry signal, resulting in a failure of the stall warning system test. Should this occur, place the “B” system electric pump ON and retract the flaps. When flaps are retracted repeat the test.

[Option]
EVACUATION activation switch ..... OFF

Guard – Down

EVACUATION light – Extinguished

REVERSER lights ..... Extinguished

EEC switches ..... ON

Copyright © The Boeing Company. See title page for details.

ALTERNATE lights – Extinguished

PASSENGER OXYGEN switch ..... NORMAL

Guard – Down

PASS OXY ON light – Extinguished

CAUTION: Switch activation will cause deployment of passenger oxygen masks.

CREW OXYGEN pressure indicator ..... Check

Verify pressure meets dispatch requirements.

SERVICE INTERPHONE switch ..... As required

GPS light .....Extinguished

IRS mode selectors .....NAV

Note: Prior to commencing the alignment procedure the airplane must be parked and not moved until alignment is complete and the ALIGN lights extinguish.

Verify both ON DC lights illuminate momentarily followed by steady illumination of the ALIGN lights. The ALIGN lights will remain illuminated until the IRS enters the NAV mode.

[Option]
Emergency locator transmitter switch .....ARM

PSEU light .....Extinguished

Circuit breakers (P–18) ..... Check

Verify circuit breakers are in or collared in compliance with dispatch requirements.

Crash axe .....Stowed

Exterior Inspection

Prior to each flight, the flight crew must accomplish or verify that the maintenance crew has accomplished the following checks.

Note: Alert ground personnel before pressurizing hydraulic system.

ELECTRIC HYDRAULIC PUMP switches ..... ON

Copyright © The Boeing Company. See title page for details.

System A and B pressure – 2800 PSI minimum

Parking brake ..... Set

Parking brake warning light – Illuminated

Exterior lights ..... Check

General airplane condition ..... Check

Check airplane free of damage and fluid leakage.

Probes, sensors, ports, vents and drains ..... Unobstructed

Doors, latches and access panels (not in use) ..... Properly secured

Tires, brakes and wheels ..... Check

If brake wear indicator pins are even with brake housing, check with maintenance.

Gear struts and doors ..... Check

Verify door seals secure, impact fittings intact, and struts not fully compressed.

Ground locking pins ..... Removed

Nose gear steering lockout pin ..... Check

Installed if pushback or tow out will be accomplished, otherwise removed.

Nose wheel snubbers ..... In place

Wheel well light switches ..... NORMAL

Oxygen pressure relief green disc ..... In place

Cargo compartments ..... Check

Check condition of compartments, tie–downs and lights.

Ram air deflector door ..... Extended

Flight control surfaces ..... Unobstructed

Check all surfaces clear of ice, snow, or frost.

Fuel measuring sticks ..... Check

Copyright © The Boeing Company. See title page for details.

Verify measuring sticks agree with alignment marks.

Wing Surfaces ..... Check

Visually inspect the lower wing surface. If there is frost or ice on the lower surface outboard of measuring stick 4, there may also be frost or ice on the upper surface. The distance that frost extends outboard of measuring stick 4 can be used as an indication of the extent of frost on the upper surface.

Note: Takeoff with light coatings of frost, up to 1/8 inch (3mm) in thickness on lower wing surfaces due to cold fuel, is permissible; however, all leading edge devices, all control surfaces, tab surfaces, upper wing surfaces and balance panel cavities must be free of snow or ice.

Note: Takeoff with light coatings of frost, up to 1/8 inch (3mm) in thickness on lower wing surfaces due to cold fuel, is permissible; however, all leading edge devices, all control surfaces, tab surfaces, upper wing surfaces, winglet surfaces and balance panel cavities must be free of snow or ice.

A & B hydraulic reservoir quantity indicators ..... RF or above

Brake accumulator indicator ..... 2800 psi minimum

APU fire control handle ..... UP

Outflow valve ..... Full open

[737-800]
Tail skid ..... Check

Replace shoe if worn to wear dimple.

Replace cartridge assembly if warning decal is red.

Engine fire extinguishers ..... Check

Verify pressure adequate per bottle data plate.

ELECTRIC HYDRAULIC PUMP switches ..... OFF

Exterior lights ..... As required

Copyright © The Boeing Company. See title page for details.

Flight Deck Preparation – Captain or First Officer

Light test .....Test

Master LIGHTS test and dim switch – TEST

Use scan flow to check all lights flashing or illuminated. Use individual test switches or push to test feature to check appropriate lights which do not illuminate during the light test. The fire warning lights are not checked during this test.

Master LIGHTS test and dim switch – As desired

FMC/CDU .....Set present position

POS INIT page – Select

Using the most accurate information available, enter present position on the SET IRS POS line. Confirm that the box prompts are replaced by the entered present position.

Copyright © The Boeing Company. See title page for details.

Flight Deck Preparation – Captain

Escape strap ..... Check

Ensure strap is connected to structure.

Sun visors and smoke goggles ..... Stowed

Oxygen and interphone ..... Check

Audio control panel – Set

[Option - Microphone selector]
Push FLIGHT INTERPHONE transmitter selector and receiver switches. Adjust volume on FLIGHT INTERPHONE receiver and SPEAKER switches. Position microphone selector to MASK.

Oxygen panel – Set

Check mask is properly stowed and NORMAL/100% switch is at 100%.

RESET/TEST button – Push down and hold

Observe momentary yellow cross in oxygen flow indicator.

EMERGENCY/TEST selector – Push and hold

While holding RESET/TEST button down, push the EMERGENCY/TEST selector and observe constant yellow cross in oxygen flow indicator.

Push–To–Talk switch – I/C

While holding RESET/TEST button down and pushing the EMERGENCY/TEST selector, simultaneously key microphone and listen for oxygen flow sound through the overhead speaker. Release/reset all switches.

Oxygen pressure – Check

Verify pressure meets dispatch requirements.

Flight control panel ..... Check

All 5 switch guards – Down

ALTERNATE FLAPS position switch – OFF

Copyright © The Boeing Company. See title page for details.

YAW DAMPER switch ..... ON

YAW DAMPER light – Extinguished

NAVIGATION transfer and
DISPLAYS switches .....AUTO & NORMAL

Fuel system ..... _____KGS/LBS & pumps ON

ENGINE VALVE CLOSED lights – Illuminated dim

SPAR VALVE CLOSED lights – Illuminated dim

FILTER BYPASS lights – Extinguished

CROSSFEED selector – Closed

VALVE OPEN light – Extinguished

Fuel quantity – Check

Verify total fuel quantity meets dispatch requirements.

FUEL PUMPS switches (for tanks containing fuel) – ON

Center tank fuel pump switches should be positioned ON only if the fuel quantity in the center tank exceeds 453 kgs/1000 lbs.

LOW PRESSURE lights – Extinguished

CAUTION: If a LOW PRESSURE light does not extinguish when the switch is positioned ON, position the switch OFF.

CAB/UTIL power switch ..... ON

IFE/PASS seat power switch ..... ON

Electrical system ..... Set

STANDBY POWER switch – AUTO (guard down)

Generator drive DISCONNECT switches – Guards down

BUS TRANSFER switch – AUTO (guard down)

CIRCUIT BREAKER and PANEL light controls..... As desired

EQUIPMENT COOLING switches .....NORMAL

OFF lights – Extinguished

Copyright © The Boeing Company. See title page for details.

EMERGENCY EXIT lights switch ..... ARMED

Guard – Down

NOT ARMED light – Extinguished

Passenger signs .....Set

NO SMOKING switch – AUTO or ON

FASTEN BELTS switch – AUTO or ON

Windshield WIPER selectors ..... PARK

WINDOW HEAT switches ..... ON

Position switches ON at least 10 minutes before takeoff.

OVERHEAT lights – Extinguished

[Option]
ON lights – Illuminated (except at high ambient temperatures)

[Option]
OFF lights – Extinguished (except at high ambient temperatures)

PROBE HEAT switches ..... OFF

WING and ENGINE ANTI – ICE switches ..... OFF

VALVE OPEN lights – Extinguished

Hydraulics ..... Normal

Note: Alert ground personnel before pressurizing hydraulic system.

System A HYDRAULIC PUMPS switches – ON

System B HYDRAULIC PUMPS switches – ON

Electric pump LOW PRESSURE lights – Extinguished

Brake pressure – 2800 PSI minimum

[Option]
MFD SYSTEM switch – Push

System A and B pressure – 2800 PSI minimum

Quantity indicators – No RF indication displayed

Copyright © The Boeing Company. See title page for details.

Pressurization indicators ..... Check

Cabin differential pressure – Zero

Cabin altitude – Field elevation

Cabin rate of climb – Zero

[Option]
High altitude landing switch – ON light extinguished

Exterior light switches ..... As desired

Ignition select switch .....IGN L or R

Alternate ignition select switch on subsequent starts.

[Without automatic ignition]
ENGINE START switches .....OFF

[Automatic ignition]
ENGINE START switches ..... AUTO

EFIS control panel ..... Set

MINIMUMS reference selector – As desired

Select RADIO or BAROMETRIC. Adjust decision height or altitude reference, as appropriate.

[Option]
FLIGHT PATH VECTOR switch – As desired

METERS switch – As desired

BAROMETRIC reference selector – Set

Select barometric altitude reference. Set local altimeter setting.

VOR/ADF switches – As desired

Mode selector – MAP

CENTER switch – As desired

Range selector – As desired

TRAFFIC switch – As desired

MAP switches – As desired

Copyright © The Boeing Company. See title page for details.

Mode control panel .....Set

When selecting a value on the MCP, ensure the corresponding display on the instrument panel changes, if applicable.

COURSE(S) – Set and crosscheck

FLIGHT DIRECTOR switches – ON

Position the switch for the pilot flying to ON first.

AUTOTHROTTLE switch – OFF

Heading – Runway heading

Bank angle limit – As desired

Altitude – As desired

Autopilots – Disengaged

Clock .....Set

TIME/DATE pushbutton - UTC time

NOSE WHEEL STEERING switch .....NORM

Display select panel .....Set

MAIN PANEL DISPLAY UNITS selector – NORM

LOWER DISPLAY UNIT selector – NORM

[Option - EFIS/MAP]

Left flight instruments .....Set

Note: IRS alignment must be complete.

EFIS – Correct

A/T, pitch, and roll FMA's - Blank

A/P status FMA - FD

Flight instrument indications are correct.

The NO V SPD flag is displayed until V–speeds are selected.

Verify no other flags displayed.

Altimeter – Set

MAP – Correct

Verify no flags displayed

Route – Displayed, correct

Copyright © The Boeing Company. See title page for details.

[Option - PFD/ND]

Left flight instruments ..... Set

Note: IRS alignment must be complete.

PFD – Correct

Flight mode annunciators – Blank

AFDS status is FLT DIR

Flight instrument indications are correct.

The NO V SPD flag is displayed until V–speeds are selected.

Verify no other flags displayed.

Altimeter – Set

ND – correct

Verify no flags displayed

Route – Displayed, correct

[Option]

Integrated standby flight display ..... Check

Approach mode display – Blank

Set local altimeter setting

Verify flight instrument indications are correct

Verify no flags or messages are displayed.

Light controls ..... As desired

Engine display control panel ..... Set

N1 SET selector – AUTO

Permits FMC control of N1 bugs.

FUEL FLOW switch – RATE

Move switch to RESET, then RATE.

SPEED REFERENCE selector – AUTO

Permits FMC control of reference speed bugs.

AUTO BRAKE select switch ..... RTO

AUTO BRAKE DISARM light – Extinguished

ANTISKID INOP light ..... Extinguished

Copyright © The Boeing Company. See title page for details.

Engine instruments ..... Check

[Option]
MFD ENGINE switch – Push

Note: EGT, F/F, oil pressure and oil temperature pointers and digital readouts are not displayed until the start switch is moved to GRD.

Primary and secondary engine indications – Normal

- engine indications display existing conditions
- no exceedance values are displayed
- engine oil quantity meets dispatch requirements

SPEED BRAKE lever .....DOWN detent

Reverse thrust levers .....Down

Forward thrust levers .....Closed

Start levers ..... CUTOFF

Parking brake .....Set

Parking brake warning light – Illuminated

STABILIZER TRIM cutout switches ..... NORMAL

Wheel well fire warning system ..... Test

Note: Delete this test if AC busses were powered during the fire warning check. Alert ground personnel before this test is accomplished with the APU operating. The fire warning light flashes and the horn sounds on the APU ground control panel.

Test switch – Hold to OVERHEAT/FIRE

Verify fire warning bell sounds, master FIRE WARNING lights, MASTER CAUTION lights and OVERHEAT/DET annunciator illuminate.

Fire warning BELL CUTOUT switch – Push

Verify WARN lights and fire warning bell cancel.

WHEEL WELL fire warning light – Illuminated

[Option]
HUD system ..... As required

Copyright © The Boeing Company. See title page for details.

[Option]
Radio tuning panel ..... Set

PANEL OFF light – Extinguished

Set panel – As desired

WARNING: Do not key HF radio while airplane is being fueled. Injury to personnel or fire may result.

[Option]
VHF comm radios ..... Set

VHF NAVIGATION radios ..... Set for departure

Audio control panel ..... Set

ADF radios ..... Set

FLOOD and PANEL light controls ..... As desired

Weather radar ..... Set

Transponder ..... Set

RUDDER and AILERON trim ..... Free & zero

Check trim for freedom of movement, set trim at zero units.

STABILIZER TRIM override switch ..... NORMAL

Seat ..... Adjust

Verify positive horizontal (fore and aft) seat lock.

Rudder pedals ..... Adjust

Adjust rudder pedals to permit full rudder deflection and brake application. Hold nose wheel steering wheel while moving rudder pedals.

Papers ..... Aboard

FMC/CDU ..... Set

IDENT page – Check

Verify airplane and engine MODEL and NAV DATA ACTIVE dates are correctly displayed.

Copyright © The Boeing Company. See title page for details.

POS INIT page – Set

Verify GMT is correct. Enter local time if desired.

RTE page – Select

Enter route by company route identifier or origin and destination airports, then waypoints and/or airways.

DEPARTURES page – Select

Select the active runway and departure/transition procedures if known.

RTE page – Select

Verify selected departure and route. Correct route discontinuities, ACTIVATE and EXEC.

PERF INIT page – Select

Verify total fuel quantity is displayed on the CDU and that the fuel quantity indicators agree, and are adequate for the planned flight. Enter gross weight or zero fuel weight, fuel reserve and cost index. Enter cruise altitude and verify transition altitude. If desired, enter cruise wind and ISA deviation or top–of–climb temperature. EXEC.

DEPARTURES page – Select (if not previously entered)

Select appropriate runway and departure/transition procedures. Select the RTE page. Verify selected departure. Correct any route discontinuities and EXEC.

Thrust mode display – Check

[Option - Non-aspirated TAT]
Verify dashes are displayed.

[Option - Aspirated TAT]
Verify TO is displayed.

Copyright © The Boeing Company. See title page for details.

[Option - FMC U 10.1 and later]
N1 LIMIT page – Select

[Option - Non-aspirated TAT]

Enter OAT

[Option - Aspirated TAT]

Check displayed OAT against reported value. Enter correct value if necessary.

If reduced thrust takeoff is planned, enter assumed (SEL) temperature.

If reduced thrust climb is planned, select desired mode.

[Option - FMC U 10.1 and later]
TAKEOFF REF page – Select

Verify preflight complete.

Enter takeoff flaps and V speeds.

Note: Verify N1 reference bugs reflect the full rated N1 value or the derated N1 value if a TAKEOFF DERATE is selected.

[Option - FMC U 10.1 and later with automatic T/O thrust reduction]
TAKEOFF REF page 2/2 – Select

Enter thrust reduction altitude if different from displayed value.

Takeoff data ..... Review

Review takeoff data to include N1, V1, VR, V2, flap setting, zero fuel weight, temperature, altimeter setting, gross weight, and stabilizer trim setting.

Copyright © The Boeing Company. See title page for details.

Flight Deck Preparation – First Officer

Escape strap ..... Check

Ensure strap is connected to structure.

Sun visors and smoke goggles ..... Stowed

Oxygen and interphone ..... Check

Audio control panel – Set

[Option - Microphone selector]
Push FLIGHT INTERPHONE transmitter selector and receiver switches. Adjust volume on FLIGHT INTERPHONE receiver and SPEAKER switches. Position microphone selector to MASK.

Oxygen panel – Set

Check mask is properly stowed and NORMAL/100% switch is at 100%.

RESET/TEST button – Push down and hold

Observe momentary yellow cross in oxygen flow indicator.

EMERGENCY/TEST selector – Push and hold

While holding RESET/TEST button down, push the EMERGENCY/TEST selector and observe constant yellow cross in oxygen flow indicator.

Push–To–Talk switch – I/C

While holding RESET/TEST button down and pushing the EMERGENCY/TEST selector, simultaneously key microphone and listen for oxygen flow sound through the overhead speaker. Release/reset all switches.

Oxygen pressure – Check

Verify pressure meets dispatch requirements.

Air conditioning system ..... ____ pack(s), bleeds ON

AIR TEMPERATURE source selector – As desired

[737-800/900]
TRIM AIR switch – ON

Copyright © The Boeing Company. See title page for details.

Temperature selectors – As desired

RAM DOOR FULL OPEN lights – Illuminated

[737-600/700]
RECIRCULATION FAN switch – AUTO

[737-800/900]
RECIRCULATION FAN switches – AUTO

Air conditioning PACK switches – AUTO or HIGH

ISOLATION VALVE switch – OPEN

Engine BLEED air switches – ON

APU BLEED air switch – As required

ON unless external air is used for start.

Pressurization system ..... Set

FLIGHT ALTITUDE indicator – Cruise altitude

LANDING ALTITUDE indicator – Destination field elevation

Pressurization mode selector – AUTO

AUTOMATIC FAIL light – Extinguished

EFIS control panel ..... Set

MINIMUMS reference selector – As desired

Select RADIO or BAROMETRIC. Adjust decision height or altitude reference, as appropriate.

[Option]
FLIGHT PATH VECTOR switch – As desired

METERS switch – As desired

BAROMETRIC reference selector – Set

Select barometric altitude reference. Set local altimeter setting.

VOR/ADF switches – As desired

Mode selector – MAP

CENTER switch – As desired

Copyright © The Boeing Company. See title page for details.

Range selector – As desired

TRAFFIC switch – As desired

MAP switches – As desired

Mode control panel .....Set

When selecting a value on the MCP, ensure the corresponding display on the instrument panel changes, if applicable.

COURSE(S) – Set and crosscheck

FLIGHT DIRECTOR switches – ON

Position the switch for the pilot flying to ON first.

Clock .....Set

TIME/DATE pushbutton - UTC time

Display select panel .....Set

MAIN PANEL DISPLAY UNITS selector – NORM

LOWER DISPLAY UNIT selector – NORM

[Option - EFIS/MAP]
Right flight instruments .....Set

Note: IRS alignment must be complete.

EFIS – Correct

A/T, pitch, and roll FMA's - Blank
A/P status FMA - FD
Flight instrument indications are correct.
The NO V SPD flag is displayed until V–speeds are selected.
Verify no other flags displayed.
Altimeter – Set

MAP – correct

Verify no flags displayed
Route – Displayed, correct

[Option - PFD/ND]
Right flight instruments .....Set

Note: IRS alignment must be complete.

Copyright © The Boeing Company. See title page for details.

PFD – Correct

Flight mode annunciators – Blank

AFDS status is FLT DIR

Flight instrument indications are correct.

The NO V SPD flag is displayed until V–speeds are selected.

Verify no other flags displayed.

Altimeter – Set

ND – Correct

Verify no flags displayed

Route – Displayed, correct

GROUND PROXIMITY warning SYSTEM
TEST switch ..... Push momentarily

Verify switch guards down.

Verify proper operation of the following:
- BELOW G/S and GPWS INOP lights illuminate
- PULL UP and WINDSHEAR alerts illuminate
- “GLIDE SLOPE”, “PULL UP”, and “WINDSHEAR” aurals sound
- TERR FAIL and TERR TEST show on navigation displays
- terrain display test pattern shows on navigation displays
- terrain caution aurals sound and TERRAIN caution message shows on navigation displays.

Note: If the test switch is held until aurals begin, the above indications and additional GPWS aural warnings are tested.

Light controls ..... As desired

VHF NAVIGATION radios ..... Set for departure

Audio control panel ..... Set

Seat ..... Adjust

Verify positive horizontal (fore and aft) seat lock.

Rudder pedals ..... Adjust

Adjust rudder pedals to permit full rudder deflection and brake application. Ensure the captain holds the nose wheel steering wheel while moving rudder pedals.

Takeoff data ..... Review

Copyright © The Boeing Company. See title page for details.

Review takeoff data to include N1, V1, VR, V2, flap setting, zero fuel weight, temperature, altimeter setting, gross weight, and stabilizer trim setting.

Copyright © The Boeing Company. See title page for details.

Final Flight Deck Preparation – Captain and First Officer

[Option - EFIS/MAP]
N1 & IAS bugs ..... Set

Verify N1 reference bugs reflect the full rated N1 value or the derated N1 value if a TAKEOFF DERATE is selected. Set V2 in the MCP IAS/Mach display and check airspeed cursors. Check speed bugs at V1, VR, V2 + 15, and flaps up maneuvering speed.

[Option - PFD/ND]
N1 & IAS bugs ..... Set

Verify N1 reference bugs reflect the full rated N1 value or the derated N1 value if a TAKEOFF DERATE is selected. Set V2 in the MCP IAS/Mach display. Verify V1 speed is displayed at the top of airspeed indication.

Engine start clearance ..... Obtain

The captain calls “BEFORE START CHECKLIST DOWN TO THE LINE.”

The first officer accomplishes the BEFORE START checklist, down to the line.

– – – – – – – – – – – – CLEARED FOR START – – – – – – – – – – – –

Doors ..... Closed

All exterior door annunciator lights – Extinguished

Flight deck windows ..... Locked

Verify the lock levers are in the locked (forward) position.

Air conditioning PACK switches ..... OFF

ANTI COLLISION light switch ..... ON

Alerts the ground crew and tower that the flight crew is starting engines.

The captain calls “BEFORE START CHECKLIST BELOW THE LINE.”

The first officer completes the BEFORE START checklist.

Copyright © The Boeing Company. See title page for details.

Engine Start Procedure

CAPTAIN	FIRST OFFICER
Announce engine start sequence. Normal starting sequence is 2, 1.	
Call "STARTING ENGINE No. ___." Position ENGINE START switch to GRD.	
Verify increase in N2 RPM.	
Acknowledge first officer's report.	Verify increase in oil pressure by the time engine is stabilized at idle and call "OIL PRESSURE RISING" when observed.
Position engine start lever to IDLE detent when: • N1 rotation is observed and • N2 RPM reaches 25% or (if 25% N2 is not achievable) • at max motoring and a minimum of 20% N2. Max motoring occurs when N2 acceleration is less than 1% in approximately 5 seconds.	
Verify fuel flow and EGT indication.	
[Without automatic ignition] At 56% N2 RPM check ENGINE START switch moves to OFF; if not, position start switch to OFF. [Automatic ignition] At 56% N2 RPM check ENGINE START switch moves to AUTO; if not, position start switch to AUTO.	[Without automatic ignition] Verify START VALVE OPEN alert extinguishes as the ENGINE START switch moves to OFF and report "STARTER CUTOUT." [Automatic ignition] Verify START VALVE OPEN alert extinguishes as the ENGINE START switch moves to AUTO and report "STARTER CUTOUT."
Monitor N1, N2, EGT, fuel flow and oil pressure for normal indications as the engine accelerates and stabilizes at idle.	

Copyright © The Boeing Company. See title page for details.

Note: Standard day, sea level, approximate stabilized idle indications for the CFM56–7 engine.

- N1 RPM – 20%
- N2 RPM – 59%
- EGT – 410°C**
- Fuel Flow – 272 KGPH/600 PPH

** Idle EGT may vary from 320°C – 520°C depending on OAT, bleed configuration, and engine conditions.

Starter Duty Cycle

- Limit each start attempt to a maximum of 2 minutes
- A minimum of 10 seconds is required between start attempts

CAUTION: Normal engine start considerations:

- Advancing engine start lever to idle prematurely can cause a “HOT” start.
- Keep hand on engine start lever while observing RPM, EGT and fuel flow until stabilized.
- If fuel is shutoff inadvertently (by closing engine start lever) do not reopen engine start lever in an attempt to restart engine.
- Failure of ENGINE START switch to hold in GRD until starter cutout RPM is reached can result in a “HOT” start. Do not re–engage ENGINE START switch until engine RPM is below 20% N2.

Note: Accomplish the ABORTED ENGINE START checklist for one or more of the following conditions:

- No N1 rotation before the engine start lever is raised to IDLE.
- No oil pressure indication by the time the engine is stabilized at idle.
- No increase in EGT within 10 seconds of raising the engine start lever to IDLE.
- No increase in, or a very slow increase in N1 or N2 after EGT indication.
- EGT rapidly approaching or exceeding the start limit.

Copyright © The Boeing Company. See title page for details.

After Start Procedure

Electrical ..... Generators ON

Both GENERATOR switches – ON

GEN OFF BUS lights – Extinguished

SOURCE OFF lights – Extinguished

PROBE HEAT switches ..... ON

All probe heat lights – Extinguished

Anti–Ice ..... As required

Air conditioning and pressurization .....Set

Pack switches – AUTO

APU BLEED air switch – OFF

ISOLATION VALVE switch .....AUTO

APU ..... As required

Start levers ..... IDLE detent

Ground equipment ..... Removed

Seat belts and shoulder harnesses ..... Fastened

The captain calls “AFTER START CHECKLIST.”

The first officer accomplishes the AFTER START checklist.

Copyright © The Boeing Company. See title page for details.

Pushback or Tow Out Procedure

This procedure is required when the airplane is to be pushed back or towed away from the terminal or loading area.

WARNING: Prior to installing the nose gear steering lockout pin, do not make any electrical or hydraulic power changes with tow bar connected. Any change to electrical power may cause momentary pressurization of the nose wheel steering actuators causing unwanted tow bar movement.

Flight interphone contact with ground crew ..... Establish

Nose gear steering lockout pin ..... Installed

System A HYDRAULIC PUMPS switches ..... ON/OFF

If the nose gear steering lockout pin is installed, pushback or tow out may be accomplished with system A pressurized or depressurized.

CAUTION: If the nose gear steering lockout pin is not installed, system A HYDRAULIC PUMPS must be placed off.

When cleared for pushback or tow out:

Brakes .....Off

When airplane is stopped:

Brakes ..... On

Parking brake ..... Set

Tow bar ..... Disconnected

Clearance from ground crew .....Clear

Nose gear steering lockout pin .....Removed

System A HYDRAULIC PUMPS switches ..... ON

Interphone .....Removed

Copyright © The Boeing Company. See title page for details.

Before Takeoff Procedure

Recall ..... Check

Flight controls ..... Check

Displace rudder pedals, control wheel and control column in both directions. Verify full travel, freedom of movement and controls return to center. Hold nose wheel steering wheel during rudder check to prevent nose wheel movement.

Flaps ....._____, Green light

Flap position indicator and FLAP lever – Set for takeoff

LEADING EDGE FLAPS EXTENDED green light – Illuminated

Stabilizer trim ....._____units

Verify stabilizer trim is set for takeoff.

Cabin door ..... Lock

CABIN DOOR UNLOCKED light – Extinguished

Takeoff briefing ..... Review

The pilot taxiing calls "BEFORE TAKEOFF CHECKLIST DOWN TO THE LINE."

The pilot not taxiing accomplishes the BEFORE TAKEOFF checklist down to the line.

– – – – – – – – – – – – CLEARED FOR TAKEOFF – – – – – – – – – – – –

[Without automatic ignition]
ENGINE START switches .....CONT

LANDING lights and STROBE light switches .....As desired

ON unless weather conditions make it undesirable.

Autothrottle .....ARM

When approaching the takeoff runway, arm the autothrottle.

FMC position update .....As desired

Copyright © The Boeing Company. See title page for details.

[Option - Runway position update with TO/GA activation]

Enter runway offset on TAKEOFF REF page of FMC/CDU.

[Option - Runway position update with the CDU only]

Update to runway threshold on the TAKEOFF REF page of FMC/CDU.

Transponder ..... ON

The pilot taxiing calls “BEFORE TAKEOFF CHECKLIST BELOW THE LINE.”

The pilot not taxiing completes the BEFORE TAKEOFF checklist.

Copyright © The Boeing Company. See title page for details.

Takeoff Procedure

PILOT FLYING	PILOT NOT FLYING
Advance thrust levers to approximately 40% N1.	
Observe engine instruments stabilized and normal.	
Push either TO/GA switch to advance the thrust levers to takeoff N1.	
Verify mode annunciation.	Ensure thrust levers advance to takeoff N1. Observe mode annunciation. **Note:** In cases of extreme headwind, the thrust levers may not advance to full N1. In this case, manually advance the thrust levers as required.
Note: After takeoff thrust is set, the captain's hand must be on the thrust levers until V1.	
Hold light forward pressure on the control column, maintain directional control.	Monitor engine instruments. Verify oil pressure is not in the amber band.
Verify 80 knots.	Call "80 KNOTS." Verify that A/T annunciation changes to THR HLD by 84 knots.
Monitor airspeed, noting V1, and rotate smoothly at VR.	[Automatic V1 callout] Confirm automatic V1 callout or call "V1". At VR call "ROTATE". Monitor flight instruments.
When a positive rate of climb is indicated, call "GEAR UP" and continue rotation to takeoff pitch attitude.	Verify positive rate of climb. Position landing gear lever UP.
Check flight instrument indications.	

Copyright © The Boeing Company. See title page for details.

After Takeoff Procedure

PILOT FLYING	PILOT NOT FLYING
Maintain a minimum of V2 + 15 knots during initial climb. At light gross weight a higher speed (up to V2 + 25) may be selected, to synchronize F/D pitch command and avoid objectionable body attitude.	Monitor engine instruments and cross–check flight progress.
Above 400 feet, call for appropriate roll mode, if required. Verify proper mode annunciation.	Select/verify roll mode. Verify proper mode annunciation.
[Without auto T/O thrust reduction] Above 1,000 feet, call for N1 and flaps up maneuvering speed. Verify flight and thrust mode annunciations. [Auto T/O thrust reduction] Above 1,000 feet, call for flaps up maneuvering speed. Verify flight and thrust mode annunciations at thrust reduction altitude.	[Without auto T/O thrust reduction] Select N1 and set flaps up maneuvering speed. [Auto T/O thrust reduction] Set flaps up maneuvering speed. Verify climb thrust is set. Verify proper mode annunciation.
When above minimum altitude for autopilot engagement, engage A/P. Verify flight mode annunciation.	Verify autopilot engaged.
Retract flaps on takeoff flap retraction speed schedule.	Position FLAP lever as directed and monitor flaps and slats retraction.
Call “AFTER TAKEOFF CHECKLIST” when flaps are up.	Position landing gear lever OFF, APU and engine start switches as required. Verify air conditioning and pressurization operating normally. Accomplish the AFTER TAKEOFF checklist.
Above 3,000 feet AGL, engage VNAV or select normal climb speed and verify annunciation.	Verify proper mode annunciation.

Copyright © The Boeing Company. See title page for details.

CAUTION: To avoid the possibility of shoulder harness buckles snapping back and pulling or damaging circuit breakers, hold both straps before releasing and then allow straps to retract slowly to the stowed position.

Takeoff Flap Retraction Speed Schedule

T/O FLAPS	SELECT FLAPS	AT: (for all weights)
25	15 5 1 UP	V2 + 15 “15” “5” “1”
15	5 1 UP	V2 + 15 “5” “1”
10	5 1 UP	V2 + 15 “5” “1”
5	1 UP	V2 + 15 “1”
1	UP	“1”

- “UP” – Flaps up maneuvering speed.
- “1”, “5”, “10”, “15”. “25” – Number corresponding to flap maneuvering speed.

Note: Limit bank angle to 15 degrees until reaching V2 + 15.

Copyright © The Boeing Company. See title page for details.

Climb and Cruise Procedure

PILOT FLYING	PILOT NOT FLYING
	Position landing lights OFF passing through 10,000 feet.
Set altimeters to standard at transition altitude.	
Approaching selected FMC cruise altitude, verify level off and proper mode/N1 limit annunciation.	
	Position center tank fuel pump switches OFF when both pump LOW PRESSURE lights illuminate.
	During the last hour of cruise on all extended range (more than one hour from an adequate airport) flights, perform Fuel Crossfeed Valve check.
Set MCP altitude selector for descent.	Prior to top of descent, select and verify the planned arrival procedure on the FMC.
At top of descent point observe descent initiated and verify proper mode annunciation.	

Note: If a center tank LOW PRESSURE light(s) illuminates during takeoff or initial climb, the center tank pump(s) may remain on until the climb attitude is reduced and the light(s) extinguishes or workload allows for the pump(s) to be positioned OFF.

Note: When established in a level attitude at cruise, if the center tank contains usable fuel and the center tank pump switches are off, the center tank pump switches should be positioned ON again. If the center tank contains more than 1000 lbs/453 kgs, the center tank pump switches must be positioned ON. Verify the LOW PRESSURE lights extinguish and position both switches OFF when both LOW PRESSURE lights illuminate.

Copyright © The Boeing Company. See title page for details.

Descent and Approach Procedure

PILOT FLYING	PILOT NOT FLYING
	Position center tank fuel pump switches OFF when both pump LOW PRESSURE lights illuminate.
Check and set VREF and approach speeds as required.	
	Set anti–ice as required.
	Verify pressurization set for destination airport elevation and system operating normally.
Set AUTO BRAKE select switch to desired brake setting.	
Set and crosscheck altimeters at transition level.	
Set and crosscheck course selection and RADIO/BARO minimums as required for approach.	
Set and verify ADF and VHF NAV radios for approach.	
	Position fixed landing lights ON passing through 10,000 feet.
Call “DESCENT–APPROACH CHECKLIST.”	Accomplish the DESCENT–APPROACH checklist.
Call “FLAPS __” according to flap speed schedule.	Position FLAP lever as directed and monitor flap and slat extension. Accomplish standard callouts.
Approaching selected FMC altitude verify level off and mode annunciation.	

Note: If a center tank LOW PRESSURE light(s) illuminate(s) during descent, position the center tank fuel pump switch(es) to OFF.

Note: When established in a level attitude, if the center tank contains usable fuel and the center tank pump switches are off, the center tank pump switches should be positioned ON again. If the center tank contains more than 1000 lbs/453 kgs, the center tank pump switches must be positioned ON. Verify the LOW PRESSURE lights extinguish and position both switches OFF when both LOW PRESSURE lights illuminate.

Copyright © The Boeing Company. See title page for details.

Approach Procedure

Using flaps as speed brakes is not recommended.

The following procedures are used for flap extension:

- Select flaps 1 when decelerating through the flaps–up maneuvering speed, displayed on the airspeed display as a “UP”.
- Set airspeed cursor to the flap maneuvering speed displayed as “1”.
- When appropriate, select the next flap position and then set the airspeed cursor to that flap maneuver speed.

Note: Flap maneuver speeds provide approximately 15 to 20 knots above the minimum maneuvering speed for each flap setting.

Note: If performance requires the use of flaps 15 for landing, place the GROUND PROXIMITY flap inhibit switch to FLAP INHIBIT.

If the flap maneuvering speeds cannot be displayed, reference the Performance In–flight section for speed schedules.

When on final approach in landing configuration, it is not recommended to set the A/T command speed to allow for wind or gust corrections. Through airspeed and acceleration sensing, the A/T corrects for normal wind gusts. Higher command speed settings result in excessive approach speeds. The recommended A/T approach speed setting is VREF + 5.

Copyright © The Boeing Company. See title page for details.

Landing Procedure

PILOT FLYING	PILOT NOT FLYING
When on localizer intercept heading, verify ILS tuned and identified, LOC and G/S pointer displayed, arm APP mode and engage second autopilot.	Set transponder mode selector to desired TCAS mode.
Verify mode annunciation.	
At localizer capture verify proper mode annunciation and set appropriate heading.	Verify proper mode annunciation.
At glide slope “alive”, call “GEAR DOWN”, “FLAPS 15." Arm speed brake and check green light illuminated. Call “LANDING CHECKLIST DOWN TO FLAPS.”	[Without automatic ignition] Position landing gear lever DN, FLAP lever to the 15 detent. Position engine start switches to CONT. Check RECALL. [Automatic ignition] Position landing gear lever DN, FLAP lever to the 15 detent. Check RECALL.
	Accomplish the LANDING checklist down to flaps. State “HOLDING AT FLAPS.”
At glide slope capture, verify proper mode annunciation, check N1 reference bug at the go–around limit and set missed approach altitude.	
Call “FLAPS ____” as required for landing. Set MCP speed selector at VREF + 5 knots.	Position FLAP lever as directed.
At final approach fix/OM, verify crossing altitude.	
Call “COMPLETE THE LANDING CHECKLIST.”	Complete the LANDING checklist.
Monitor approach progress and guard the controls. At 500 feet AGL, verify FLARE is armed. At approximately 50 feet AGL, verify FLARE is engaged. Ensure the autothrottle retards the thrust levers to idle by touchdown.	

Copyright © The Boeing Company. See title page for details.

Go–Around Procedure

PILOT FLYING	PILOT NOT FLYING
Push TO/GA switch. Call “FLAPS 15.” If full GA thrust is required, push TO/GA switch again after reduced GA thrust is established.	Monitor N1 indication. Position FLAP lever to 15 and monitor flap retraction.
Confirm rotation to go–around attitude and monitor autopilot.	
Verify mode annunciation.	
When positive rate of climb is indicated, call “GEAR UP” and monitor acceleration.	Verify positive rate of climb. Position landing gear lever UP.
Check flight instrument indications (MCP speed window blanks).	
Call “TUNE RADIOS FOR MISSED APPROACH.”	Tune radios as directed.
Above 400 feet, select appropriate roll mode and verify proper mode annunciation.	Observe mode annunciation.
Retract flaps on flap speed schedule.	Position FLAP lever as directed and monitor flaps and slats retraction.
Verify airplane levels off at selected altitude and maintains flap maneuvering speed.	
Call “AFTER TAKEOFF CHECKLIST.”	Accomplish the AFTER TAKEOFF checklist.

Copyright © The Boeing Company. See title page for details.

Landing Roll Procedure

PILOT FLYING	PILOT NOT FLYING
Ensure thrust levers at idle.	
Disengage autopilot and control airplane manually. Verify autothrottle disengages automatically.	Verify autothrottle is disengaged.
Verify SPEED BRAKE lever (ground spoilers) - UP.	Verify SPEED BRAKE lever UP. Call out "SPEED BRAKES UP." If SPEED BRAKE lever not UP, call "SPEED BRAKES NOT UP."
Verify proper autobrake operation.	
Without delay, raise reverse thrust levers to the interlocks, hold light pressure until release, and then apply reverse thrust as required.	Monitor engine instruments and announce any engine limit being approached, exceeded or any other abnormalities.
At 60 knots, reduce reverse thrust to be at IDLE reverse when reaching taxi speed.	Call "60 KNOTS"
Approaching taxi speed, slowly move the reverse thrust levers to the full down position.	Verify REV indication extinguished.
Prior to taxi speed, disarm the autobrake and continue manual braking as required.	

WARNING: After reverse thrust has been initiated, a full stop landing must be made.

Copyright © The Boeing Company. See title page for details.

Taxi In Procedure

When clear of the active runway, the pilot taxiing positions the SPEED BRAKE lever to the DOWN detent and the pilot not taxiing accomplishes the following:

SPEED BRAKE lever ..... Verify DOWN

FLAP lever ..... UP

APU (if required) ..... START

PROBE HEAT switches ..... OFF

[Without automatic ignition]
ENGINE START switches ..... OFF

LANDING/TAXI light and STROBE light switches ..... As desired

FLIGHT DIRECTOR switches ..... OFF

WEATHER RADAR ..... Off

Transponder ..... As desired

APU GENERATOR switches (if APU operating) ..... ON

CAUTION: To avoid the possibility of shoulder harness buckles snapping back and pulling or damaging circuit breakers, hold both straps before releasing and then allow straps to retract slowly to the stowed position.

Copyright © The Boeing Company. See title page for details.

Shutdown Procedure

After the airplane has come to a complete stop, perform the following actions:

Parking brake .....Set

Parking brake warning light – Illuminated

Electrical .....On___

Verify APU powering busses. If APU is not to be used, connect external power.

Start levers ..... CUTOFF

If possible, operate the engines at idle for three minutes prior to shutdown to thermally stabilize the engine hot sections. Operating times at or near idle, such as taxiing before shutdown, are applicable to this three–minute period. If operational requirements dictate, the engines may be shut down with a one–minute cooling period.

FASTEN BELTS switch ..... OFF

ANTI COLLISION light switch ..... OFF

FUEL PUMP switches ..... OFF

CAUTION: Do not operate the center tank fuel pumps with the flight deck unattended.

CAB/UTIL power switch .....As required

IFE/PASS seat power switch .....As required

WINDOW HEAT switches ..... OFF

WING and ENGINE ANTI–ICE switches ..... OFF

ELECTRIC HYDRAULIC PUMP switches ..... OFF

[737-600/700]
RECIRCULATION FAN switch .....As desired

[737-800/900]
RECIRCULATION FAN switches .....As desired

Air conditioning PACK switches.....AUTO

ISOLATION VALVE switch – OPEN

Copyright © The Boeing Company. See title page for details.

Engine BLEED air switches ..... ON

APU BLEED air switch ..... ON

Exterior lights ..... As required

WEATHER RADAR ..... OFF

AUTO BRAKE select switch ..... OFF

Flight deck lights ..... As desired

SPEED BRAKE lever ..... DOWN detent

Parking brake ..... As required

With chocks in place, the parking brake may be released.

Transponder ..... As required

Cabin door ..... Unlock

The captain calls "SHUTDOWN CHECKLIST."

The first officer accomplishes the SHUTDOWN checklist.

Secure Procedure

IRS mode selectors ..... OFF

EMERGENCY EXIT lights switch ..... OFF

Air conditioning PACK switches ..... OFF

APU switch/GROUND POWER switch ..... OFF

If APU was operating:

Delay approximately 2 minutes after the APU GEN OFF BUS light extinguishes before placing the BATTERY switch OFF.

BATTERY switch ..... OFF

The captain calls "SECURE CHECKLIST."

The first officer accomplishes the SECURE checklist.

Copyright © The Boeing Company. See title page for details.

DO NOT USE FOR FLIGHT

Takeoff

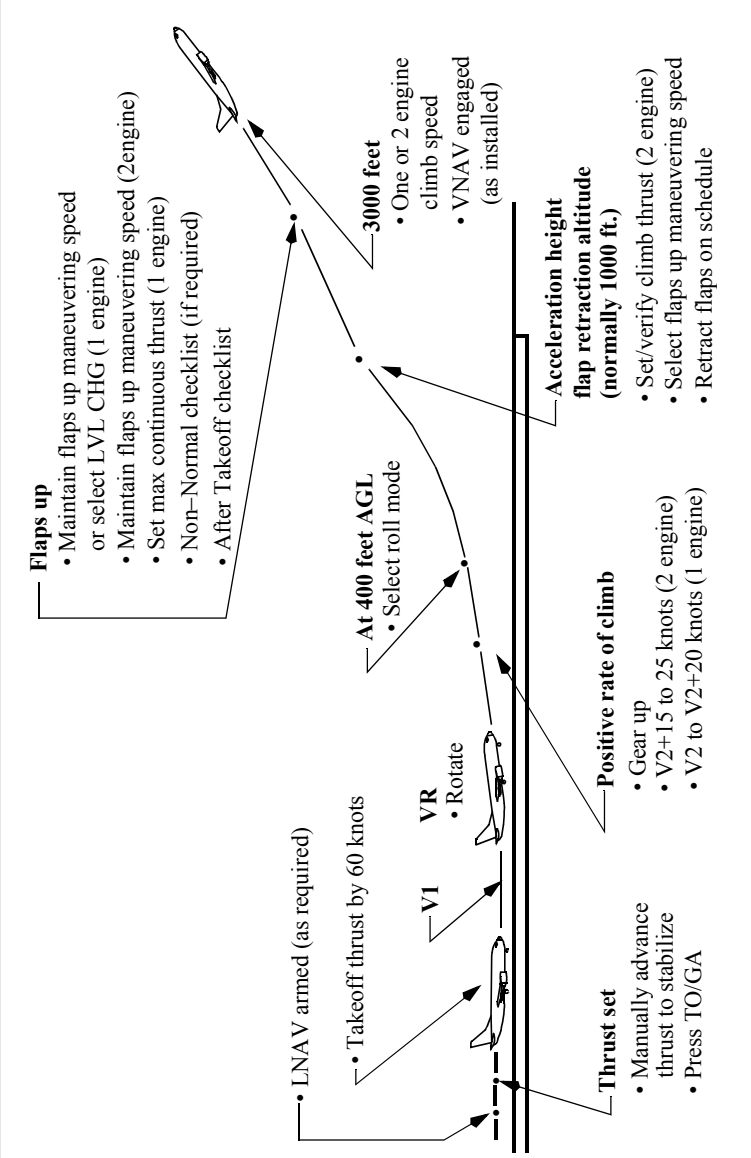

Copyright © The Boeing Company. See title page for details.

DO NOT USE FOR FLIGHT

ILS Approach

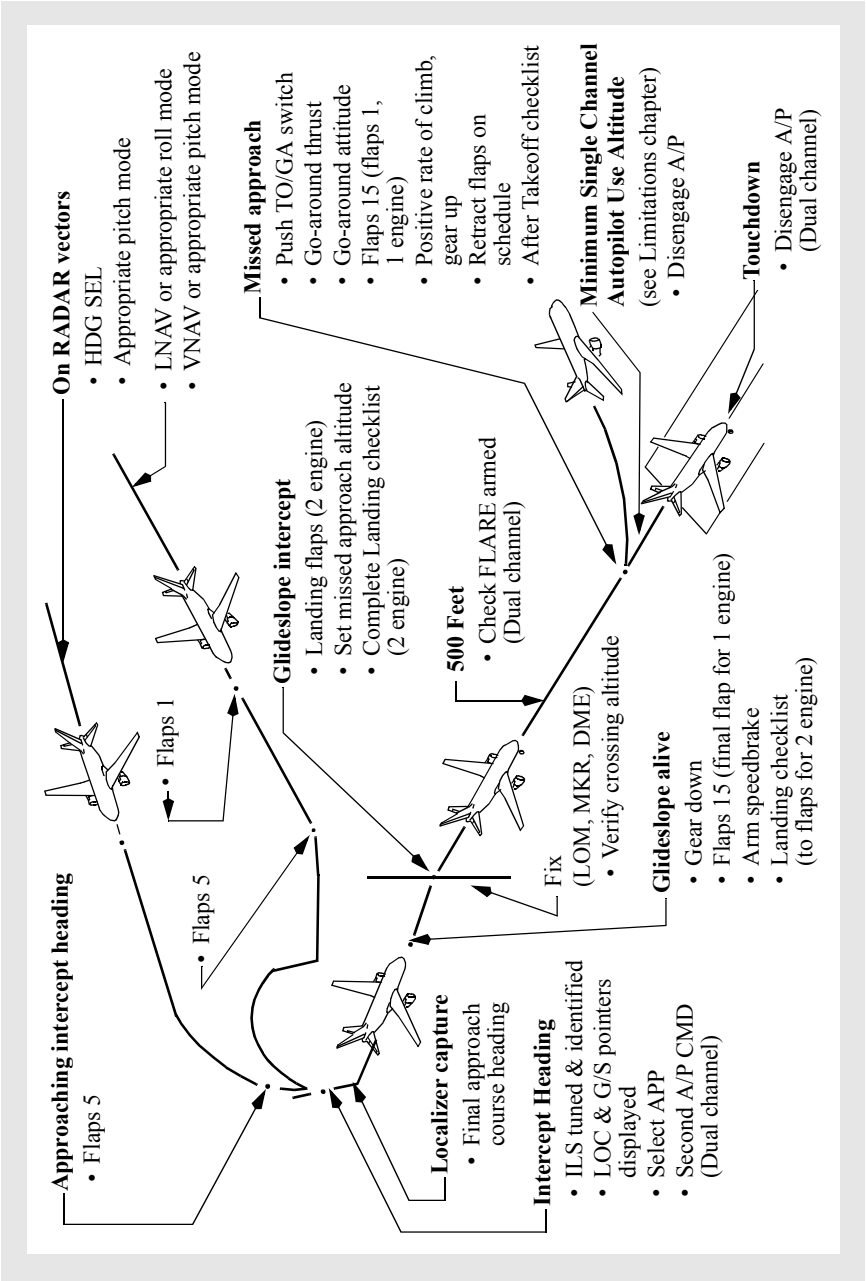

Copyright © The Boeing Company. See title page for details.

Instrument Approach using VNAV

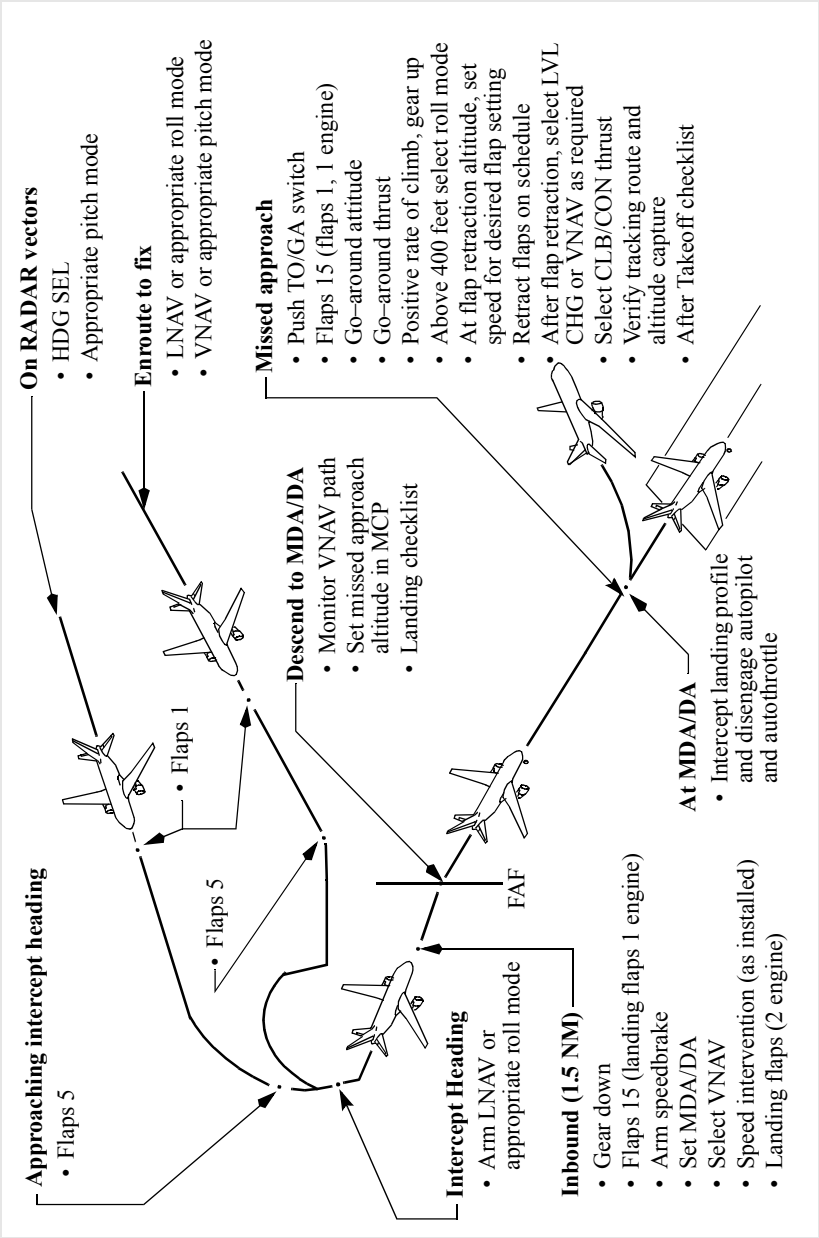

Copyright © The Boeing Company. See title page for details.

DO NOT USE FOR FLIGHT

Instrument Approach using V/S

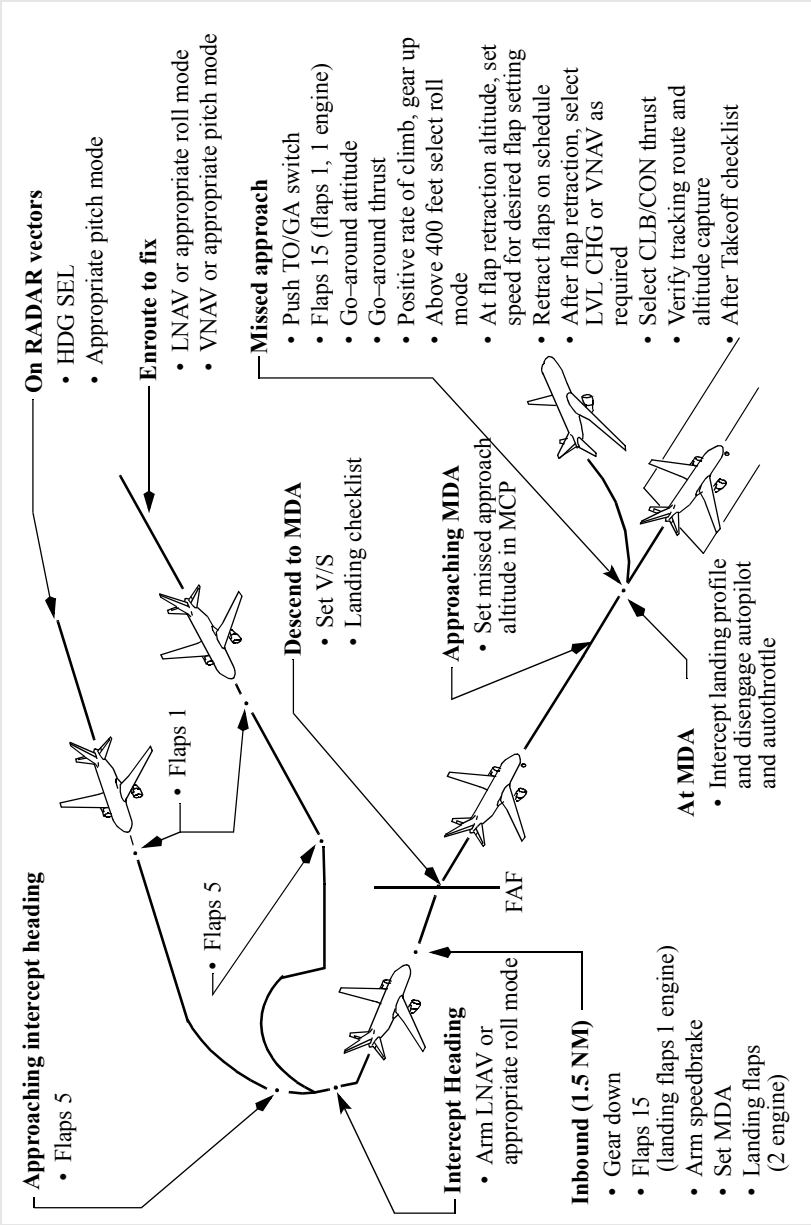

Copyright © The Boeing Company. See title page for details.

Circling Approach

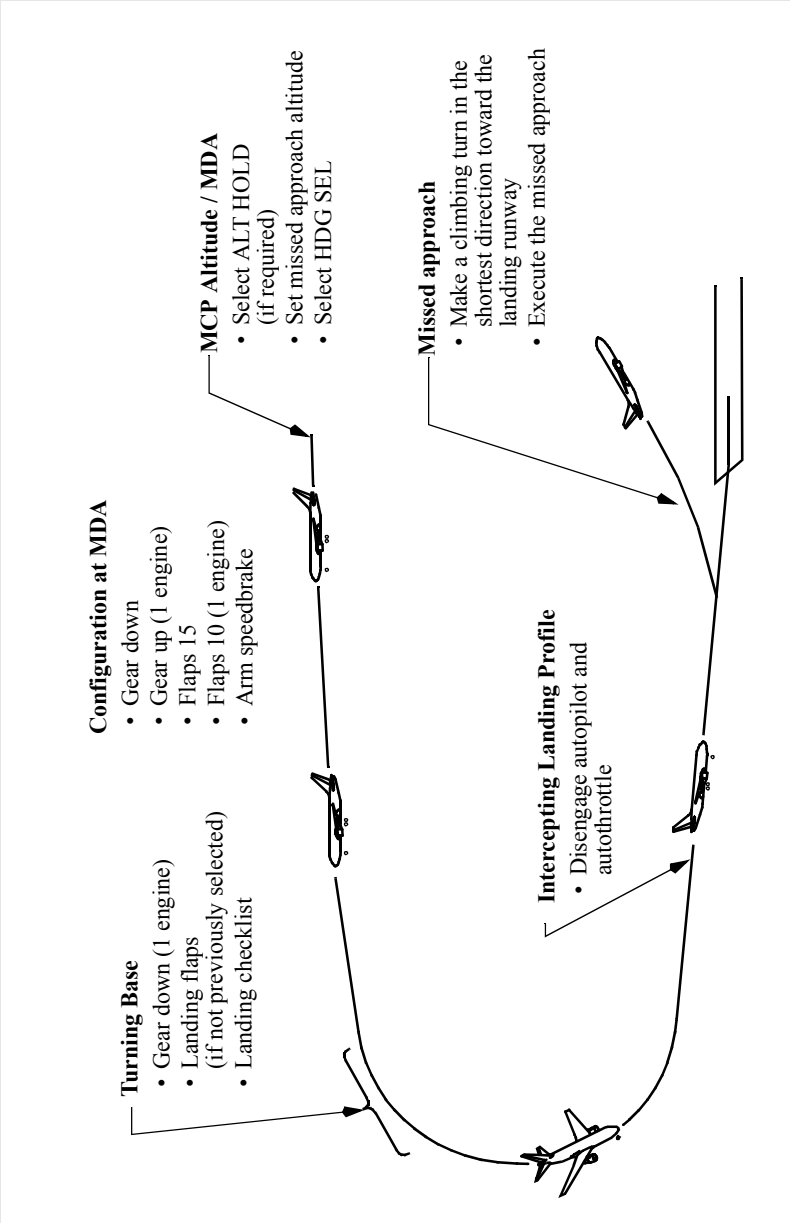

Copyright © The Boeing Company. See title page for details.

DO NOT USE FOR FLIGHT

Visual Traffic Pattern

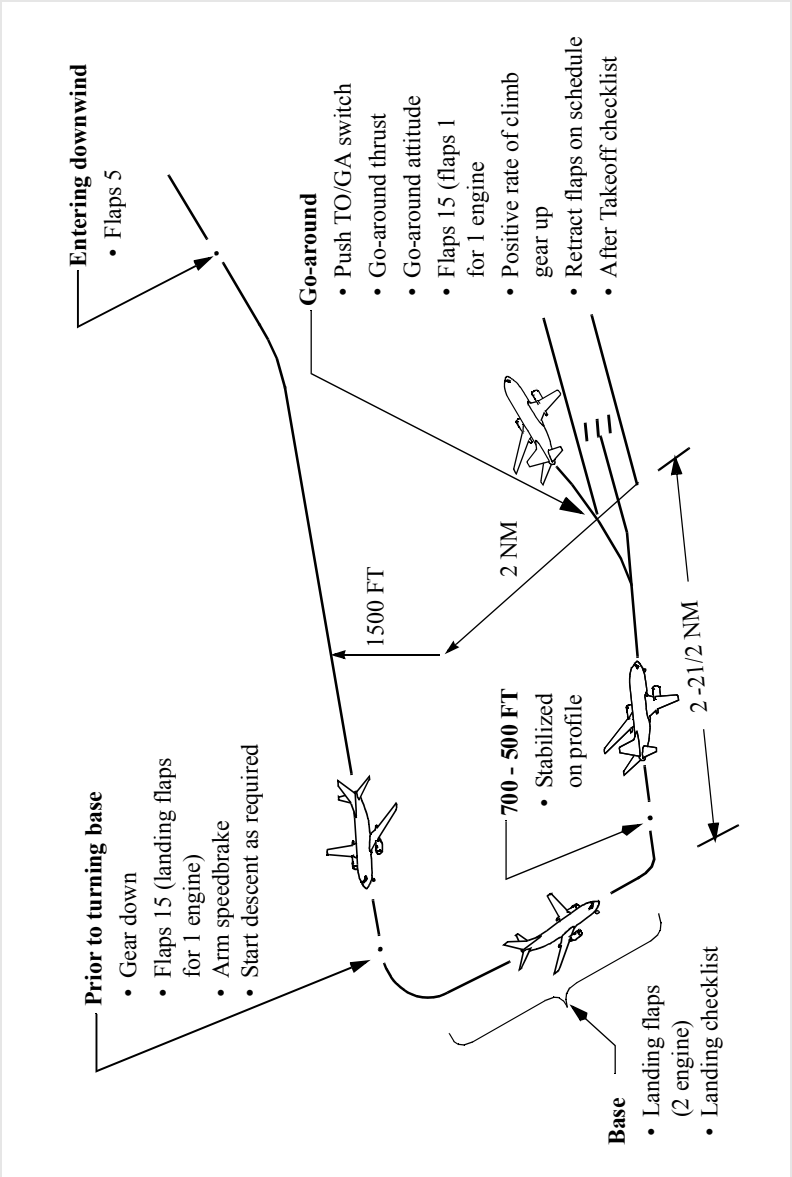

Copyright © The Boeing Company. See title page for details.

Introduction SP.05.1

General SP.05.1

Airplane General, Emergency Equipment, Doors, Windows SP.1.1

Interior Inspection SP.1.1

Water System Draining SP.1.1

Forward Airstair Operation SP.1.3

Interior Control SP.1.3

Exterior Control SP.1.4

Air Systems SP.2.1

Wing–Body Overheat Test SP.2.1

External Air Cart Use SP.2.1

Ground Air Conditioning Cart Use SP.2.2

Isolated Pack Operation during Engine Start SP.2.2

Pressurization System Manual Mode Test SP.2.2

Manual Mode Operation SP.2.3

During Descent SP.2.4

Pressurization Control Operation – Landing at Alternate Airport SP.2.4

Automatic Pressurization Control – Landing Airport Elevation Above 6000 Feet SP.2.4

Unpressurized Takeoff and Landing SP.2.5

Takeoff SP.2.5

After Takeoff SP.2.5

Landing SP.2.5

No Engine Bleed Takeoff and Landing SP.2.5

Takeoff SP.2.6

After Takeoff SP.2.6

Copyright © The Boeing Company. See title page for details.

Landing SP.2.6

Anti–Ice, Rain SP.3.1

Anti–Ice Operation SP.3.1

Window Heat System Tests SP.3.1

Overheat Test SP.3.1

Power Test SP.3.1

Power Test SP.3.2

Automatic Flight SP.4.1

Level Change Climb/Descent SP.4.1

Vertical Speed (V/S) Climb/Descent SP.4.1

Temporary Level-Off during Climb or Descent (Not at FMC Cruise Altitude) SP.4.2

Intervention of FMC Altitude Constraints during VNAV Climb SP.4.2

Intervention of FMC Cruise Altitude during VNAV Cruise SP.4.2

Intervention of FMC Altitude Constraints during VNAV Descent SP.4.3

Intervention of FMC Airspeed Constraints during VNAV SP.4.3

Altitude Hold SP.4.3

Heading Select SP.4.3

VOR Navigation SP.4.4

Instrument Approach using VNAV SP.4.4

Instrument Approach using Vertical Speed (V/S) SP.4.6

Circling Approach SP.4.7

Communications SP.5.1

Aircraft Communication Addressing and Reporting System (ACARS) SP.5.1

Pre-Departure Clearance SP.5.1

Digital-Automatic Information Service SP.5.1

Copyright © The Boeing Company. See title page for details.

Oceanic Clearances SP.5.1
Cockpit Voice Recorder Test SP.5.1

Electrical. SP.6.1
Standby Power Test. SP.6.1
Standby Power Test. SP.6.2

Engines, APU SP.7.1
Battery Start SP.7.1
Starting with Ground Air Source (AC electrical power available) SP.7.3
Engine Crossbleed Start SP.7.3
Setting N1 Bugs with an Inoperative FMC SP.7.4
APU Start SP.7.4

Fire Protection SP.8.1
Fire and Overheat System Test with an Inoperative Loop SP.8.1

Flight Controls SP.9.1
Flight Controls Check SP.9.1

Flight Instruments, Displays. SP.10.1
Altimeter Difference SP.10.1
QFE Operation SP.10.2
Setting Airspeed Bugs with an Inoperative FMC. SP.10.3
HUD System Procedures SP.10.5
Flight Deck Preparation. SP.10.5
Descent and Approach. SP.10.5
Landing SP.10.6
Shutdown SP.10.6
ILS Approach Using HUD SP.10.7
Non-Precision Approach Using HUD SP.10.8
Circling Approach Using HUD SP.10.9
Visual Traffic Pattern Using HUD. SP.10.10

Copyright © The Boeing Company. See title page for details.

Flight Management, Navigation SP.11.1

Tests SP.11.1
Transponder Test SP.11.1
Weather Radar Test SP.11.1
IRS SP.11.2
Fast Realignment SP.11.2
ISDU Entries SP.11.2
Inadvertent Selection of Attitude Mode (while on the ground) SP.11.3
Lateral Navigation (LNAV) SP.11.3
Proceeding Direct to a Waypoint (overwrite) SP.11.3
Proceeding Direct to a Waypoint (DIR/INTC) SP.11.4
Intercepting a Leg (Course) to a Waypoint SP.11.4
Intercepting a Leg (Course) to a Waypoint (DIR/INTC) SP.11.5
Route Modification SP.11.5
Route Removal SP.11.5
Linking a Route Discontinuity SP.11.6
Determining ETA and Distance to Cross Radial (Bearing) or Distance from a Fix SP.11.6
Changing Destination SP.11.6
Entering Holding Fix Into Route SP.11.6
Exiting Holding Pattern SP.11.7
Along Track Displacement SP.11.7
Entering Created Waypoints on the Route or Route Legs Pages SP.11.8
Entering Created Waypoints on the Nav Data Pages SP.11.8
Deleting Created Waypoints on the Nav Data Pages SP.11.9
Entering a Crossing Radial (Bearing) or Distance from a Fix as a Route Waypoint SP.11.10
Entering a Lateral Offset SP.11.11
Change SID or Runway SP.11.11
Change STAR, PROF DES, or APP SP.11.11
Delete Procedure Turn SP.11.12

Copyright © The Boeing Company. See title page for details.

Other Operations SP.11.12
FMC Navigation Check SP.11.12
Inhibiting VOR/DME Use for Position Updating SP.11.13
Inhibiting GPS Updating SP.11.13
Vertical Navigation (VNAV) SP.11.14
Temporary Level Off during Climb or Descent (Not at FMC Cruise Altitude) SP.11.14
Intervention of FMC Altitude Constraints during VNAV Climb SP.11.14
Intervention of FMC Cruise Altitude during VNAV Cruise SP.11.14
Intervention of FMC Altitude Constraints during VNAV Descent SP.11.15
Intervention of FMC Airspeed Constraints during VNAV SP.11.15
Entering Waypoint Speed and Altitude Restriction (On Climb or Descent Legs Only) SP.11.15
Deleting Waypoint Speed and Altitude Restriction SP.11.16
Changing Speed and/or Altitude Restriction during Climb or Descent SP.11.16
Changing Climb/Cruise/Descent Speed Schedule SP.11.16
Early Descent SP.11.16
Step Climb or Descent from Cruise SP.11.17
Performance and Progress Functions SP.11.17
Determining ETA and Fuel Remaining for New Destination SP.11.17
Estimated Wind Entries for Cruise Waypoints SP.11.18
Step Climb Evaluation SP.11.18
Entering Descent Forecasts SP.11.18
Engine Out SP.11.19
Required Time of Arrival (RTA) SP.11.19
Entering an RTA Waypoint and Time SP.11.19
Entering Speed Restrictions for RTA Navigation SP.11.19
Entering New Time Error Tolerances for RTA Navigation SP.11.20

Copyright © The Boeing Company. See title page for details.

Additional CDU Functions SP.11.20
Navigation Display Plan Mode (Center Step Operation) SP.11.20
Enter Position Shift on Runway SP.11.20

Fuel SP.12.1

Fuel Balancing SP.12.1
Refueling SP.12.2
Fuel Load Distribution SP.12.2
Fuel Pressure SP.12.2
Normal Refueling SP.12.2
Refueling with Battery Only SP.12.2
Refueling with No AC or DC Power Source Available SP.12.3
Ground Transfer of Fuel SP.12.3
Fuel Crossfeed Valve Check SP.12.4

Adverse Weather SP.16.1

Introduction SP.16.1
Cold Weather Operation SP.16.1
Preflight SP.16.2
Engine Start SP.16.3
After Start SP.16.3
Taxi–Out SP.16.5
Before Takeoff SP.16.6
Climb and Cruise SP.16.7
Approach and Landing SP.16.9
Taxi–In and Park SP.16.10
Secure (Airplane Attended) SP.16.10
Secure (Airplane Unattended) SP.16.11
Hot Weather Operation SP.16.11
Moderate to Heavy Rain SP.16.12
Turbulence SP.16.13

Copyright © The Boeing Company. See title page for details.

Severe Turbulence SP.16.13
Windshear SP.16.15
Avoidance SP.16.15
Precaution SP.16.15

Copyright © The Boeing Company. See title page for details.

Intentionally
Blank

Copyright © The Boeing Company. See title page for details.

General

This section contains procedures (adverse weather operation, engine crossbleed start, and so on) that are accomplished as required rather than routinely performed on each flight.

Supplementary procedures may be required because of adverse weather, unscheduled maintenance or as a result of a procedure referenced in a Non–Normal Checklist. Additionally, some may be performed if the flight crew must accomplish preflight actions normally performed by maintenance personnel.

At the discretion of the Captain, procedures may be performed by recall, by reviewing the procedure prior to accomplishment, or by reference to the procedure during its accomplishment.

Supplementary procedures are provided by section. Section titles correspond to the respective chapter title for the system being addressed except for the adverse weather section.

Copyright © The Boeing Company. See title page for details.

DO NOT USE FOR FLIGHT

Intentionally
Blank

Copyright © The Boeing Company. See title page for details.

Interior Inspection

Emergency exit lights ..... Check

Passenger signs ..... Check

Service and entry doors ..... Check

Escape slides ..... Check pressure

Emergency exits ..... Check

Wing upper surfaces ..... Check

Lavatory fire extinguishers ..... Check

Emergency equipment ..... Check

Check availability and condition of emergency equipment, as required.

Water System Draining

Lavatory water supply selector valves ..... SUPPLY/DRAIN

Galley water supply shutoff valves ..... SUPPLY ON

The shutoff valve is found adjacent to each wet galley sink.

Drain line ..... Connect to drain ports

There are two drain port locations:

- below the main passenger entry door
- aft of the water service panel

Water service panel ..... Open

Tank drain valve handle ..... OPEN

Drains potable water tank and water system aft of the wings.

Forward lavatory drain valve ..... OPEN

Drain valve is found below the sink in the forward lavatory only.

Drain valves for coffee maker and water boiler (if installed) ..... OPEN

Copyright © The Boeing Company. See title page for details.

All galley and lavatory water faucets .....Open

Close faucets when water flow stops.

Accomplish the following items after verifying the potable water system is empty:

Drain valves for coffee maker and water boiler (if installed) .....CLOSED

Forward lavatory drain valve .....CLOSED

Tank drain valve handle .....CLOSED

Water service panel ..... Close

Drain line ..... Disconnect from drain ports

If the potable water tank will not be refilled immediately after the system is emptied, open the following circuit breakers and attach DO–NOT–CLOSE tags:

P18–3 circuit breaker panel
- LAVATORY WATER HEATER A
- LAVATORY WATER HEATER D
- LAVATORY WATER HEATER E

Power distribution panel number 1
- POT WATER COMPRESSOR
- WATER QTY IND

Copyright © The Boeing Company. See title page for details.

Forward Airstair Operation
[Option]

CAUTION: Operation of airstair in winds exceeding 40 knots is not recommended.

CAUTION: Do not move airplane with stair extended.

Interior Control

WARNING: Open entry door to cocked position to allow clear visibility of area outside airplane to prevent injury to personnel. Do not open door beyond cocked position while operating airstair.

To extend:

Forward Entry Door .....Open to Cocked Position

When operating the airstair from the interior control panel, the forward entry door must be open to the cocked position. Safety circuits prevent airstair operation if the entry door is closed.

Control Switch .....EXTEND

Note: For interior standby operation, the battery switch must be ON.

Hold until extension is complete.

The STAIRS OPER light illuminates during extension until the airstair is fully extended.

Note: The STAIRS OPER light will not illuminate with loss of AC power.

Control Switch ..... Release

Handrail Extensions .....Engage

Release latch and pull inboard and up, extend and engage on supports at sides of forward entry doorway.

To Retract:

Handrail Extensions .....Disengage

Disengage from door supports, depress latch at base of forward extension to permit retraction within upper segment of handrail. Slide right and left extensions down along upper rails. Stowing in

Copyright © The Boeing Company. See title page for details.

appropriate stowage points provides circuit continuity for energizing retract relays.

When using the standby control switch, visually check that the handrail extensions are stowed.

CAUTION: Airstair handrail extensions must be stowed or substantial damage could result.

Control switch ..... RETRACT

Hold until retraction is complete.

The STAIRS OPER light illuminates during retraction until the airstair door is fully closed.

Note: The STAIRS OPER light will not illuminate with loss of AC power.

Control switch ..... Release

Exterior Control

To Extend:

Normal mode:

AIRSTAIRS switch ..... EXTEND

Standby mode:

POWER switch ..... Hold in STANDBY

AIRSTAIRS switch ..... EXTEND

Handrail Extensions ..... Engage

Release latch and pull inboard and up, extend and engage on supports at sides of forward entry door.

To Retract:

Handrail Extensions ..... Disengage

Disengage from door supports, depress latch at base of forward extension to permit retraction within upper segment of handrail. Slide right and left extensions down along upper rails. Stowing in

Copyright © The Boeing Company. See title page for details.

appropriate stowage points provides circuit continuity for energizing retract relays.

When using the standby control switch, visually check that the handrail extensions are stowed.

CAUTION: Airstair handrail extensions must be stowed or substantial damage could result.

Normal mode:

AIRSTAIRS switch ..... RETRACT

Standby mode:

POWER switch ..... Hold in STANDBY

AIRSTAIRS switch ..... RETRACT

Copyright © The Boeing Company. See title page for details.

DO NOT USE FOR FLIGHT

Intentionally
Blank

Copyright © The Boeing Company. See title page for details.

Wing–Body Overheat Test

Wing–body OVHT TEST switch ..... Push

Hold for a minimum of 5 seconds.

Both WING–BODY OVERHEAT lights – illuminated

MASTER CAUTION – illuminated

AIR COND system annunciator – illuminated

Wing–body OVHT TEST switch ..... Release

Both WING–BODY OVERHEAT lights – extinguished

MASTER CAUTION lights – extinguished

AIR COND system annunciator – extinguished

External Air Cart Use

CAUTION: The BAT switch should always be on when using the airplane air conditioning system since the protective circuits are DC. This ensures protection in the event of loss of AC power.

Note: For engine start with a ground air source, see section SP.7.

APU BLEED air switch ..... OFF

ISOLATION VALVE switch ..... OPEN

[737-600/700]
RECIRC FAN switch ..... AUTO

[737-800/900]
RECIRC FAN switches ..... AUTO

[737-800/900]
Trim Air Switch ..... ON

PACK switches ..... AUTO or HIGH

Cabin temperature selectors ..... AUTO

Set for desired temperature.

Copyright © The Boeing Company. See title page for details.

Duct pressure ..... 20 psi minimum

If external air cannot hold 20 psi minimum and the APU is operating:

ISOLATION VALVE switch ..... AUTO

APU BLEED air switch ..... ON

APU supplies left pack and external air source supplies right pack.

Ground Air Conditioning Cart Use

Before connecting ground air conditioning cart:

PACK switches ..... OFF

Allows cart to operate at maximum efficiency

After disconnecting ground air conditioning cart:

PACK switches ..... As required

Isolated Pack Operation during Engine Start

To improve cabin air quality between starting the first and second engine:

CAUTION: Moving engine BLEED air switches while a starter is engaged can damage the starter.

Engine No. 2 ..... Start

After engine No. 2 stabilized:

ISOLATION VALVE switch ..... CLOSE

Right PACK switch ..... AUTO

Duct pressure ..... Stabilized

Engine No. 1 ..... Start

After engine No. 1 stabilized:

ISOLATION VALVE switch ..... AUTO

Pressurization System Manual Mode Test

PACK switches ..... OFF

Pressurization mode selector ..... MAN

Copyright © The Boeing Company. See title page for details.

AUTO FAIL and ALTN lights – extinguished.

MANUAL light – illuminated.

Outflow valve switch ..... CLOSE

Verify outflow valve position indicator moves toward CLOSE.

Outflow valve switch ..... OPEN

Verify outflow valve position indicator moves toward OPEN.

Pressurization mode selector .....AUTO

Verify outflow valve position indicator moves toward OPEN.

MANUAL light – extinguished.

Manual Mode Operation

CAUTION: Switch actuation to the manual mode causes an immediate response by the outflow valve. Full range of motion of the outflow valve can take up to 20 seconds.

Pressurization mode selector ..... MAN

MANUAL light – illuminated

CABIN/FLIGHT ALTITUDE placard ..... Check

Determine the desired cabin altitude.

If a higher cabin altitude is desired:

Outflow valve switch (momentarily) ..... OPEN

Verify the outflow valve position indicator moves right, cabin altitude climbs at the desired rate, and differential pressure decreases. Repeat as necessary.

If a lower cabin altitude is desired:

Outflow valve switch (momentarily) ..... CLOSE

Verify the outflow valve position indicator moves left, cabin altitude descends at the desired rate, and differential pressure increases. Repeat as necessary.

Copyright © The Boeing Company. See title page for details.

During Descent

Thrust lever changes should be made as slowly as possible to prevent excessive pressure bumps.

Outflow valve switch (momentarily) ..... CLOSE

During descent, intermittently position the outflow valve switch toward CLOSE, observing cabin altitude decrease as the airplane descends.

Before entering the landing pattern, slowly position the outflow valve switch to full open to depressurize the airplane. Verify differential pressure is zero.

Pressurization Control Operation – Landing at Alternate Airport

At top of descent:

LAND ALT Indicator ..... Reset

Reset to new destination field elevation.

Automatic Pressurization Control – Landing Airport Elevation Above 6000 Feet

[Option - High Altitude Landing switch]

If flight is less than one hour and landing altitude is less than 9500 feet:

Use Normal Procedures.

If flight is more than one hour or landing altitude is more than 9500 feet:

Use Normal Procedures except as modified below.

Prior to takeoff:

LAND ALT indicator ..... 6000 feet

At initial descent or approximately 20 minutes prior to landing:

LAND ALT indicator .....Destination field elevation

Copyright © The Boeing Company. See title page for details.

If landing elevation above 9500 feet:

High altitude landing switch ..... ON

Note: CABIN ALTITUDE warning is inhibited to 14,000 feet. The need for crew oxygen may be unannounced prior to landing

Unpressurized Takeoff and Landing

When making a no engine bleed takeoff or landing with the APU inoperative:

Takeoff

PACK switches ..... AUTO

ISOLATION VALVE switch ..... CLOSE

Engine BLEED air switches ..... OFF

After Takeoff

Note: If engine failure occurs, do not position engine BLEED air switches ON until reaching 1500 feet or until obstacle clearance height has been attained.

At not less than 400 feet, and prior to 2000 feet above field elevation:

Engine No. 2 BLEED air switch ..... ON

When CABIN rate of CLIMB indicator stabilizes:

Engine No. 1 BLEED air switch ..... ON

ISOLATION VALVE switch ..... AUTO

Landing

When below 10,000 feet and starting final approach turn:

Engine BLEED air switches ..... OFF

Avoid high rates of descent for passenger comfort.

No Engine Bleed Takeoff and Landing

When making a no engine bleed takeoff or landing with the APU operating.

Copyright © The Boeing Company. See title page for details.

Takeoff

Note: If anti–ice is required for taxi, configure for a “No Engine Bleed Takeoff” just prior to take–off.

Note: If anti–ice is not required for taxi, configuration for a “No Engine Bleed Takeoff” may be accomplished just after engine start.

Right PACK switch ..... AUTO

ISOLATION VALVE switch ..... CLOSE

Left PACK switch ..... AUTO

Engine No. 1 BLEED air switch .....OFF

APU BLEED air switch ..... ON

Engine No. 2 BLEED air switch .....OFF

[737-800/900]
Trim Air Switch ..... ON

After Takeoff

Note: If engine failure occurs, do not position engine BLEED air switches ON until reaching 1500 feet or until obstacle clearance height has been attained.

Engine No. 2 BLEED air switch ..... ON

APU BLEED air switch .....OFF

When CABIN rate of CLIMB indicator stabilizes:

Engine No. 1 BLEED air switch ..... ON

ISOLATION VALVE switch ..... AUTO

Landing

If additional go–around thrust is desired, configure the pressurization system for a no engine bleed landing.

When below 10,000 feet:

Right PACK switch ..... AUTO

ISOLATION VALVE switch ..... CLOSE

Copyright © The Boeing Company. See title page for details.

Left PACK switch.....AUTO

Engine No. 1 BLEED air switch ..... OFF

APU BLEED air switch .....ON

Engine No. 2 BLEED air switch ..... OFF

Copyright © The Boeing Company. See title page for details.

Intentionally
Blank

Copyright © The Boeing Company. See title page for details.

Anti–Ice Operation

Requirements for use of anti–ice and operational procedures for engine and wing anti–ice are contained in Supplementary Procedures, Adverse Weather Section SP.16.

Window Heat System Tests

Overheat Test

The overheat test simulates an overheat condition to check the overheat warning function of the window heat system.

WINDOW HEAT switches ..... ON

WINDOW HEAT TEST switch ..... OVHT

OVERHEAT lights – On

[Option - Green ON light]
ON lights – Extinguish

Lights extinguish after approximately 1 minute.

[Option - Amber OFF light]
OFF lights – Illuminated

Lights illuminate after approximately 1 minute.

MASTER CAUTION – On

ANTI–ICE system annunciator – On

WINDOW HEAT switches ..... Reset

Position the WINDOW HEAT switches OFF, then ON.

Power Test

[Option - Green ON light]

The power test verifies operation of the window heat system. The test may be accomplished when any of the window heat ON lights are extinguished and the associated WINDOW HEAT switch is ON.

WINDOW HEAT switches ..... ON

Note: Do not power test when all ON lights are illuminated

Copyright © The Boeing Company. See title page for details.

WINDOW HEAT TEST switch ..... PWR

The controller is forced to full power, bypassing normal temperature control. Overheat protection is still available.

WINDOW HEAT ON lights .....Illuminated

If any ON light remains extinguished, the window heat system is inoperative. Observe the maximum airspeed limit of 250 kts below 10,000 feet.

Power Test

[Option - Amber OFF light]

The power test verifies operation of the window heat system. The test may be accomplished when any of the window heat OFF lights are illuminated and the associated WINDOW HEAT switch is ON.

WINDOW HEAT switches ..... ON

Note: Do not power test when all OFF lights are extinguished

WINDOW HEAT TEST switch ..... PWR

The controller is forced to full power, bypassing normal temperature control. Overheat protection is still available.

WINDOW HEAT OFF lights ..... Extinguished

If any OFF light remains illuminated, the window heat system is inoperative. Observe the maximum airspeed limit of 250 kts below 10,000 feet.

Copyright © The Boeing Company. See title page for details.

Level Change Climb/Descent

ALTITUDE selector ..... Set desired altitude

Note: If a new MCP altitude is selected while in ALT ACQ, the AFDS engages in V/S and the existing vertical speed is maintained.

LVL CHG switch ..... Push

Verify FMA display:

Thrust mode (climb) – N1

Thrust mode (descent) – RETARD then ARM

Pitch mode – MCP SPD

IAS/MACH Selector ..... Set desired speed

Vertical Speed (V/S) Climb/Descent

ALTITUDE selector ..... Set desired altitude

Note: If a new MCP altitude is selected while in ALT ACQ, the AFDS engages in V/S and the existing vertical speed is maintained.

V/S thumbwheel ..... Set desired vertical speed

Verify FMA display:

Thrust mode (climb or descent) – MCP SPD

Pitch mode – V/S

IAS/MACH Selector ..... Set desired speed

To transition to the vertical speed mode from another engaged climb or descent mode:

V/S mode switch ..... Push

V/S climb mode engages at existing V/S.

V/S thumbwheel ..... Set desired vertical speed

Copyright © The Boeing Company. See title page for details.

Verify FMA display:

Thrust mode (climb or descent) – MCP SPD

Pitch mode – V/S

IAS/MACH Selector ..... Set desired speed

Temporary Level-Off during Climb or Descent (Not at FMC Cruise Altitude)

MCP altitude selector .....Set desired altitude

MCP N1 light will extinguish if leveling from a climb.

N1 Limit changes to CRZ if leveling from a climb.

To continue climb/descent:

MCP altitude selector .....Set desired altitude

VNAV switch ..... Push

Observe climb or descent initiated. Mode annunciations appear as initial climb or descent.

Intervention of FMC Altitude Constraints during VNAV Climb

[Option - Speed and altitude intervention]

MCP altitude selector ..... Set new altitude

New altitude must be higher than the FMC altitude constraint(s) to be deleted.

ALT INTV switch ..... Push

Each push of the ALT INTV switch will delete an FMC altitude constraint.

Intervention of FMC Cruise Altitude during VNAV Cruise

[Option - Speed and altitude intervention]

MCP altitude selector ..... Set

ALT INTV switch ..... Push

If a higher altitude is selected, a CRZ climb will be initiated.

If a lower altitude is selected, an early descent will be initiated.

Copyright © The Boeing Company. See title page for details.

Intervention of FMC Altitude Constraints during VNAV Descent

[Option - Speed and altitude intervention]

MCP altitude selector ..... Set new altitude

New altitude must be lower than the FMC altitude constraint (s) to be deleted.

ALT INTV switch ..... Push

Each push of the ALT INTV switch will delete an FMC altitude constraint.

If all FMC altitude constraints are deleted, the descent mode will revert to a VNAV speed descent.

Intervention of FMC Airspeed Constraints during VNAV

[Option - Speed and altitude intervention]

SPD INTV switch ..... Push

MCP IAS/MACH display shows current FMC target speed.

IAS/MACH Selector ..... Set desired speed

VNAV remains engaged.

To resume former FMC speed:

SPD INTV switch ..... Push

MCP IAS/MACH display blanks and FMC commanded VNAV speed is active.

Altitude Hold

Altitude HOLD switch ..... Push

Verify FMA display:

Pitch mode – ALT HOLD

Heading Select

Heading selector ..... Set desired heading

Heading select switch ..... Push

Verify FMA display:

Copyright © The Boeing Company. See title page for details.

Roll mode – HDG SEL

VOR Navigation

VHF NAV radio(s) ..... Tune and Identify

COURSE selector ..... Set desired course

When on an intercept heading to the VOR course:

VOR LOC mode switch ..... Push

Verify VOR LOC armed mode annunciates.

A/P automatically captures the VOR course.

Verify VOR LOC engaged mode annunciates upon course capture.

Note: If change to a localizer frequency is desired when captured in the VOR mode, disengage VOR LOC mode prior to selection of the localizer. VOR LOC mode can then be reengaged.

Instrument Approach using VNAV

Note: This procedure is not authorized using QFE.

Note: Operational approval required for the use of an MDA as a DA. If required to remain at or above MDA during the missed approach, a missed approach must be initiated at least 50 feet above MDA.

Recommended roll modes for final approach:

- RNAV, GPS or TACAN approach: LNAV
- LOC-BC, VOR or NDB approach: LNAV or HDG SEL
- LOC, SDF or LDA approach: VOR/LOC or LNAV.

For LOC, LOC-BC, SDF or LDA approaches, ensure appropriate navaids are tuned and identified prior to commencing the approach and monitor raw data throughout the approach. For VOR and NDB approaches, raw data should be monitored, if available.

FMC approach procedure ..... Select

Select the approach procedure on the ARRIVALS page. Do not manually build the approach or add waypoints to the selected FMC procedure. Add cold temperature corrections to waypoint altitude constraints as appropriate.

Copyright © The Boeing Company. See title page for details.

Verify VNAV glide path angle is displayed on the final approach segment of the LEGS page.

RNP appropriate for approach (if required) ..... Verify/Enter

[Allows appropriate alerting to occur if ANP exceeds RNP.]

Within 1.5 miles prior to the FAF and after ALT HLD or VNAV PTH is engaged:

MCP altitude ..... Set MDA/DA

[Allows VNAV to command descent in VNAV PTH. If the MDA/DA does not end in zero zero, for example, 1820, set MCP ALTITUDE window to the closest 100 foot increment above the constraint.]

Note: There may be a level segment beyond the FAF before intercepting the descent path.

Prior to reaching FAF:

AFDS roll mode ..... Verify/select

Verify appropriate roll mode annunciates.

VNAV switch (if required) ..... Push

Select VNAV if in ALT HLD. Verify VNAV PTH annunciates.

Speed Intervention ..... Select

Autopilot ..... Verify engaged

[Autopilot should remain engaged until suitable visual reference is established.]

Prior to reaching MDA/DA and when the airplane is at least 300 feet below the missed approach altitude:

MCP altitude ..... Set missed approach altitude

At MDA/DA/Missed approach point:

If suitable visual reference is not established, execute a missed approach.

After suitable visual reference is established:

A/P disengage switch ..... Push

Disengage the autopilot before descending below MDA/DA.

Copyright © The Boeing Company. See title page for details.

A/T disengage switch ..... Push

Disengage the autothrottle before descending below MDA/DA.

Instrument Approach using Vertical Speed (V/S)

Note: Autopilot use is recommended until suitable visual reference is established.

Recommended roll modes:

- RNAV, GPS, TACAN, LOC-BC, VOR or NDB approach: LNAV or HDG SEL.
- LOC, SDF or LDA approach: LOC or LNAV.

Ensure appropriate navaids (VOR, LOC or NDB) are tuned and identified prior to commencing approach.

Before descent to MDA:

MCP altitude ..... Set

Set the first intermediate altitude constraint or the MDA. When the current constraint is assured, the next constraint may be set prior to ALT HOLD is engaged to achieve continuous descent path.

If constraints or MDA do not end in zero zero, for example, 1820, set MCP ALTITUDE window to the closest 100 foot increment above the constraint.

At descent point:

Desired V/S ..... Set

Set desired V/S to descend to MDA. Use a V/S that results in little or no level flight segment at the MDA.

Verify V/S mode annunciates.

Approaching MDA:

MCP altitude ..... Set missed approach altitude

At MDA/missed approach point:

If suitable visual reference is not established, execute a missed approach.

Copyright © The Boeing Company. See title page for details.

After a suitable visual reference is established:

A/P disengage switch ..... Push

Disengage the autopilot before descending below MDA.

A/T disengage switch ..... Push

Disengage the autothrottle before descending below MDA.

Circling Approach

Note: Autopilot use is recommended until intercepting the landing profile.

MCP altitude selector .....Set

If the MDA does not end in zero zero, for example, 1820, set MCP ALTITUDE window to the closest 100 foot increment above the MDA.

Accomplish an instrument approach, establish suitable visual reference and level off at MCP altitude.

Verify ALT HLD mode annunciates.

Verify ALT HLD or VNAV ALT mode annunciates.

MCP altitude selector ..... Set missed approach altitude

HDG SEL switch ..... Push

Verify HDG SEL mode annunciates.

Intercepting the landing profile:

Autopilot disengage switch ..... Push

Autothrottle disengage switch ..... Push

Copyright © The Boeing Company. See title page for details.

Intentionally
Blank

Copyright © The Boeing Company. See title page for details.

Aircraft Communication Addressing and Reporting System (ACARS)

The following procedures are applicable to the noted ACARS functions from the company pages.

Pre-Departure Clearance

The flight crew shall manually verify (compare) the filed flight plan versus the digital pre-departure clearance and shall initiate voice contact with Air Traffic Control if any question/confusion exists between the filed flight plan and the digital pre-departure clearance.

Digital-Automatic Information Service

The flight crew shall verify that the D-ATIS altimeter setting numeric value and alpha value are identical. If the D-ATIS altimeter setting altimeter numeric value and alpha values are different, the flight crew must not accept the D-ATIS altimeter setting.

Oceanic Clearances

The flight crew shall manually verify (compare) the filed flight plan versus the digital oceanic clearance and initiate voice contact with Air Traffic Control if any questions/confusion exists between the filed flight plan and the digital oceanic clearance.

Cockpit Voice Recorder Test

[Option - Voice Recorder switch]

Note: The Cockpit VOICE RECORDER switch must be in the ON position or at least one engine must be operating to perform this test.

Test switch ..... Push

After a slight delay:

[Option]
Monitor indicator ..... Green band

A tone may be heard through a headset plugged into the headset jack.

[Option]
Test light ..... ON

A tone may be heard through a headset plugged into the headset jack.

Copyright © The Boeing Company. See title page for details.

Test switch ..... Release

Copyright © The Boeing Company. See title page for details.

Standby Power Test

[Option - Single battery]

Battery switch .....ON

AC–DC meter selectors .....STBY PWR

If APU generator is on–line:

BUS TRANSFER switch ..... OFF

APU GEN No. 2 switch or GRD PWR switch ..... OFF

Turn OFF appropriate switch depending on power source in use. Removes power from TR 3.

STANDBY POWER switch ..... OFF

Check STANDBY PWR OFF light illuminated.

AC–DC voltmeters ..... Zero

STANDBY POWER switch ..... BAT

Check STANDBY PWR OFF Light extinguished

AC–DC voltmeters ..... Check

AC voltmeter 115 +/-5 volts

DC voltmeter 24 +/-2 volts

Frequency meter ..... Check

Check frequency meter for normal indication: 400 +/- 10 CPS.

STANDBY POWER switch .....AUTO

BUS TRANS switch .....AUTO

APU GEN No. 2 switch or GRD PWR switch .....ON

Note: It may take up to 3 minutes for CDS displays to recover when power is interrupted for more than 2 seconds on the ground.

Copyright © The Boeing Company. See title page for details.

Standby Power Test

[Option – Dual battery]

Battery switch ..... ON

AC–DC meter selectors ..... STBY PWR

If APU generator is on–line:

APU GEN No. 1 switch ..... OFF

APU GEN No. 2 switch ..... OFF

If ground power is on–line:

GRD PWR switch ..... OFF

STANDBY POWER switch ..... OFF

Check STANDBY PWR OFF light illuminated.

AC–DC voltmeters ..... Zero

STANDBY POWER switch ..... BAT

Check STANDBY PWR OFF Light extinguished.

AC–DC voltmeters ..... Check

AC voltmeter 115 +/-5 volts

DC voltmeter 24 +/-2 volts

Frequency meter ..... Check

Check frequency meter for normal indication: 400 +/- 10 CPS.

DC meter selector ..... BAT

Check DC voltmeter for normal indication: 24 +/- 2 volts.

Check DC ammeter for discharge indication: a negative value.

DC meter selector ..... AUX BAT

Check DC voltmeter for normal indication: 24 +/- 2 volts.

Check DC ammeter for discharge indication: a negative value.

STANDBY POWER switch ..... AUTO

Copyright © The Boeing Company. See title page for details.

GRD PWR switch or APU GEN No. 1 and No. 2 switches ..... ON

Note: It may take up to 3 minutes for CDS displays to recover when power is interrupted for more than 2 seconds on the ground.

Copyright © The Boeing Company. See title page for details.

Intentionally
Blank

Copyright © The Boeing Company. See title page for details.

Battery Start

(With APU bleed or ground air available)

Prior to a battery start, accomplish the exterior safety inspection and the flight deck safety inspection. Accomplish interior/exterior inspections if required except for items requiring electrical or hydraulic power.

Accomplish the following preliminary flight deck preparation items:

Fault/Inop detection ..... Check

Fire/Overheat warning ..... Check

EXT TEST switch ..... Check

APU (bleed air source if available) ..... Start

Flap Lever ..... Set

Position the FLAP lever to agree with the FLAPS position indicator.

Emergency equipment ..... Check

Circuit breakers ..... Check

Flight recorder ..... Set

Crash axe .....Stowed

On the captain's command, the first officer reads and the captain accomplishes the following items:

Oxygen & interphone ..... Check

CAB/UTIL power switch .....ON

IFE/PASS seat power switch .....ON

EMER EXIT LIGHTS switch ..... ARMED

Passenger signs ..... Set

HYD PUMP switches .....ON

Air conditioning & pressurization ..... _____ Pack(s), bleeds ON, set

Copyright © The Boeing Company. See title page for details.

Parking brake ..... Set

Note: The wheels should be chocked in case the brake pressure has bled down.

Papers ..... Aboard

Cleared for Start

PACK switches ..... OFF

ANTICOLLISION light switch ..... ON

Ignition select switch ..... IGN-R

Engine Start

Engine No. 1 start ..... Accomplish

Only N1, N2, and oil quantity are displayed until the EECs are powered.

Generator No. 1 switch ..... ON

IRS mode selectors ..... NAV

FMC/CDU ..... Set IRS position

WARNING: If engine No. 1 was started using a ground air source, to minimize the hazard to ground personnel, the external air should be disconnected and engine No. 2 started using the Engine Crossbleed Start procedure.

Engine No. 2 start ..... Accomplish

Generator No. 2 switch ..... ON

After Start

Complete the preliminary flight deck preparation by checking the following items:

MACH AIRSPEED WARNING test switches ..... Push

STALL WARNING TEST switches ..... Push

REVERSER lights ..... Check

EEC switches ..... ALTN then ON

Copyright © The Boeing Company. See title page for details.

Passenger oxygen switch ..... NORMAL

Crew oxygen ..... Check

Accomplish panel scan to insure that the flight deck preparation procedure is complete.

AFTER START checklist ..... Accomplish

IRS alignment ..... Complete & no flags

The airplane is ready for taxi. Refer to the normal checklists for subsequent checks.

Starting with Ground Air Source (AC electrical power available)

Engine No. 1 must be started first.

When cleared to start:

APU BLEED air switch ..... OFF

Engine No. 1 start ..... Accomplish

Use normal start procedures.

WARNING: To minimize the hazard to ground personnel, the external air should be disconnected, and engine No. 2 started using the Engine Crossbleed Start procedure.

Engine Crossbleed Start

Prior to using this procedure, ensure that the area to the rear is clear.

Engine BLEED air switches ..... ON

APU BLEED air switch ..... OFF

PACK switches ..... OFF

ISOLATION VALVE switch ..... AUTO

Ensures bleed air supply for engine start.

Engine thrust lever (operating engine) ..... Advance thrust lever until bleed duct pressure indicates 30 PSI

Copyright © The Boeing Company. See title page for details.

Non–operating engine .....Start

Use normal start procedures with crossbleed air.

After starter cutout, adjust thrust on both engines, as required.

Setting N1 Bugs with an Inoperative FMC

Reference the Performance – Inflight section to determine N1 setting for desired phase of flight.

N1 SET outer knob ..... BOTH

The last FMC computed value is displayed by reference N1 bugs and readouts. If the FMC has not calculated an input since power up, a default value of 104% is displayed.

N1 SET inner knob ..... Set N1

Note: If the N1 SET outer knob is returned to the AUTO position, the bugs and readouts will revert to the last FMC computed value or 104% if the FMC has not calculated an input since power up.

APU Start

Note: With at least one generator operating, subsequent start attempts should be made at succeedingly lower altitudes until a satisfactory start is accomplished.

Note: During the APU start cycle, the APU EGT indication may fluctuate from 0° to 1100° C prior to normal EGT rise and the LOW OIL PRESSURE light may cycle on and off several times.These indications have no adverse effect on starting the APU. It is not necessary to monitor EGT during start. Automatic shutdown occurs in the event of EGT exceedance. If the LOW OIL PRESSURE light illuminates after the start cycle is complete, accomplish the APU LOW OIL PRESSURE non-normal checklist.

APU Switch ..... START

Momentarily position APU switch to START and release to ON.

Check LOW OIL PRESSURE light illuminates, then extinguishes.

Copyright © The Boeing Company. See title page for details.

Check APU GEN OFF BUS light illuminates.

Note: The start cycle may take as long as 120 seconds.

Note: If extended APU operation is required on the ground and fuel is loaded in the center tank, place the left center tank fuel pump switch ON to prevent a fuel imbalance before takeoff.

CAUTION: Do not operate the center tank fuel pumps with the flight deck unattended.

[Option - Without DC Operated APU Fuel Pump]

Note: Whenever the APU is operating and AC electrical power is on the airplane busses, extended service life of the APU fuel control unit can be realized by operating at least one fuel boost pump to supply fuel under pressure to the APU.

Copyright © The Boeing Company. See title page for details.

Intentionally
Blank

Copyright © The Boeing Company. See title page for details.

Fire and Overheat System Test with an Inoperative Loop

To determine the specific inoperative loop:

OVHT DET switches .....A

Test switch .....OVHT/FIRE

If the FAULT light remains extinguished and both ENG OVERHEAT lights and engine fire warning switches illuminate, loop A is good.

If the FAULT light illuminates and one of the ENG OVERHEAT lights and corresponding engine fire warning switch remain extinguished, there is a fault in loop A of the detection system of that engine.

OVHT DET switches .....B

Test switch .....OVHT/FIRE

If the FAULT light remains extinguished and both ENG OVERHEAT lights and engine fire warning switches illuminate, loop B is good.

If the FAULT light illuminates and one of the ENG OVERHEAT lights and corresponding engine fire warning switch remain extinguished, there is a fault in loop B of the detection system of that engine.

OVHT DET switches .....As required

Select the good loop for each engine (NORMAL if both loops tested good).

Test switch .....OVHT/FIRE

If the test is successful leave the fire panel in this configuration for flight.

Copyright © The Boeing Company. See title page for details.

Intentionally
Blank

Copyright © The Boeing Company. See title page for details.

Flight Controls Check

This is a check of normal flight control functions and is not a complete check of the flight control system. Two people are required; both on interphone.

FLIGHT DECK ACTION	GROUND RESPONSE
Electrical power (APU or external) – On bus	
System A and B electric hydraulic pump switches – OFF	
Control wheel – Left	"LEFT AILERON UP, TAB DOWN; RIGHT AILERON DOWN, TAB UP"
Control wheel – Right	"LEFT AILERON DOWN, TAB UP; RIGHT AILERON UP, TAB DOWN"
Control wheel – Neutral	
Control column – Forward	"ELEVATOR DOWN, TABS UP"
Control column – Aft	"ELEVATOR UP, TABS DOWN"
Control column – Neutral	
Request hydraulic clearance	"CLEAR FOR HYDRAULIC PRESSURE, WING AND CONTROL AREAS CLEAR"
System A and B electric hydraulic pump switches – ON Verify System A & B pressure indicators and brake pressure indicator read 2800 psi minimum	
Parking brake – Set	
Rudder trim – Turn left Verify left rudder pedals move forward	

Copyright © The Boeing Company. See title page for details.

FLIGHT DECK ACTION	GROUND RESPONSE
Rudder trim – Turn right Verify right rudder pedals move forward	
Rudder trim – Zero, pedals centered	
Aileron trim – Turn left Verify control wheel turns to left	
Aileron trim – Turn right Verify control wheel turns to right	
Aileron trim – Zero, control wheels centered	
Flap lever – UP Verify flap position indicator reads zero	
Nose gear steering wheel – Hold Control wheel – Left Control column – Forward Rudder pedal – Left	"LEFT AILERON UP, TAB DOWN; LEFT FLIGHT SPOILERS UP; RIGHT AILERON DOWN, TAB UP; RUDDER LEFT; ELEVATORS DOWN, TABS UP"
Nose gear steering wheel – Hold Control wheel – Right Control column – Aft Rudder pedal – Right	"LEFT AILERON DOWN, TAB UP; RIGHT FLIGHT SPOILERS UP; RIGHT AILERON UP, TAB DOWN; RUDDER RIGHT; ELEVATORS UP, TABS DOWN"
Flight controls – Neutral	
Alternate flaps master switch – ARM	
Flap lever – Position 1 Verify no flap movement	

Copyright © The Boeing Company. See title page for details.

FLIGHT DECK ACTION	GROUND RESPONSE
Alternate flaps position switch – hold DOWN until flap position indicator indicates 1	"FLAPS MOVING DOWN"
Flap position indicator – flaps 1 Verify aft overhead leading edge devices annunciator panel indicates all green (FULL EXTEND) with no amber lights illuminated. Verify LE FLAPS TRANSIT light remains illuminated	"ALL LEADING EDGE DEVICES FULLY EXTENDED"
Alternate flaps master switch – OFF Verify Aft overhead leading edge devices annunciator panel indicates all leading edge flaps full extended and all leading edge slats in extend position Verify LE FLAPS EXT light illuminated	"LEADING EDGE FLAPS FULLY EXTENDED, ALL LEADING EDGE SLATS RETRACTED TO EXTEND POSITION"
Speed brake lever – UP	"ALL SPOILERS UP"
Speed brake lever – DOWN	"ALL SPOILERS DOWN"
Stabilizer trim switches – NOSE DOWN	"STABILIZER LEADING EDGE MOVING UP"
Stabilizer trim switches – NOSE UP	"STABILIZER LEADING EDGE MOVING DOWN"
With stabilizer still moving: Stabilizer trim cutout switches – CUTOUT Verify trim motor stops	

Copyright © The Boeing Company. See title page for details.

FLIGHT DECK ACTION	GROUND RESPONSE
Stabilizer trim cutout switches – NORMAL Verify Trim motor resumes Control column – Forward Verify Trim motor stops Column actuated stab trim override – OVERRIDE Verify Trim motor resumes	
Stabilizer trim switches – Trim into green band	
Column actuated stab trim override – NORMAL Switch guard – Close	
Request clearance to flaps 30	“FLAPS CLEAR”
Flap lever – Position 30	“FLAPS MOVING DOWN”
Control column – Forward	“ELEVATOR DOWN, TABS DOWN”
Control column – Aft	“ELEVATOR UP, TABS UP”
Control column – Neutral	
Flap lever – UP	“FLAPS MOVING UP”
Parking Brake – As desired Electrical power – As desired	

Copyright © The Boeing Company. See title page for details.

Altimeter Difference

Note: If flight in RVSM airspace is planned use the RVSM table in the limitations section.

This procedure is accomplished when there is a noticeable difference between the altimeters. Accomplish this procedure in stabilized level flight or on the ground.

Altimeter barometric settings ..... Check

Check all altimeters set to proper barometric setting for phase of flight.

Standby altimeter baro set control ..... Rotate and reset

Rotate to a different setting, then reset proper barometric setting.

Altimeters ..... Crosscheck

Maximum differences between the altimeter readings:

Altitude	CDS/CDS	CDS/Standby
Sea Level	50 feet	50 feet
5,000 feet	50 feet	80 feet
10,000 feet	60 feet	120 feet
15,000 feet	70 feet	(see note)
20,000 feet	80 feet	(see note)
25,000 feet	100 feet	(see note)
30,000 feet	120 feet	(see note)
35,000 feet	140 feet	(see note)
40,000 feet	160 feet	(see note)
41,000 feet	170 feet	(see note)

Note: Above 10,000 feet and 0.4 Mach, position error causes the tolerance to diverge rapidly and direct crosscheck becomes inconclusive. Differences greater than 400 feet should be suspect and verified by ground maintenance checks.

If it is not possible to identify which altimeter is indicating the correct altitude:

ATC ..... Notify

Copyright © The Boeing Company. See title page for details.

QFE Operation

This procedure is accomplished when ATC altitude assignments are referenced to QFE altimeter settings.

Note: Do not use LNAV or VNAV below transition altitude/level. Altitudes in the navigation data base are not referenced to QFE. Use only raw data for navigation.

[Option - Altimeter with QFE]
FMC/CDU APPROACH REFERENCE page
or TAKEOFF REFERENCE page 2/2 ..... Select

LANDING REF line select key ..... Push

Verify QFE selected.

[This sets the landing altitude to zero.]

Altimeters ..... Set

Set altimeters to QFE when below transition altitude/level.

Note: If QFE altimeter setting is beyond the range of the altimeters, QNH procedures must be used with QNH set in the altimeters.

Landing altitude indicator ..... Set at zero

Copyright © The Boeing Company. See title page for details.

Setting Airspeed Bugs with an Inoperative FMC

To set reference airspeed bugs for takeoff:

Speed reference selector (outer) V1

Default speed of 80 knots is displayed.

Speed reference selector (inner) .....Set V1 speed

V1 bug is displayed when a speed greater than 80 knots is set. The NO VSPD flag is displayed until both V1 and VR are set.

Speed reference selector (outer) ..... VR

Default speed of 80 knots is displayed.

Speed reference selector (inner) .....Set VR speed

VR bug is displayed when a speed greater than 80 knots is set. The NO VSPD flag is removed after both V1 and VR are set.

MCP speed selector .....Set V2

Airspeed cursor and V2+15 bug move to the correct speeds.

Speed reference selector (outer) ..... WT

Default weight of 32,000 kgs / 70,000 lbs is displayed.

Speed reference selector (inner) .....Set takeoff gross weight

Flaps up maneuver speed bug is displayed.

Note: If VREF is selected on the ground, INVALID ENTRY is displayed.

To set the spare bug, if desired:

Speed Reference selector (outer) .....Spare bug

Default speed of 60 knots is displayed.

Speed reference selector (inner).....Set

Set speed as desired.

Speed reference selector (outer) .....SET

Digital readout is removed.

Note: When the flap lever is set to any takeoff flap setting above flaps 1, a bug comes into view for the next smaller flap maneuvering speed, between takeoff flaps and flaps up. For

Copyright © The Boeing Company. See title page for details.

example, if the flap lever is set to 15 for takeoff, a bug for flaps 5 maneuvering speed will appear. For a flaps 1 takeoff, the flaps 1 maneuvering speed will be displayed.

To set reference airspeed bugs for approach:

Speed reference selector (outer) ..... WT

Default weight of 32,000 kgs / 70,000 lbs is displayed.

Speed reference selector (inner) ..... Set current gross weight

Flaps up maneuver speed bug is displayed.

Speed reference selector (outer) ..... VREF

Default speed of 80 knots is displayed.

Speed reference selector (inner) .....Set VREF speed

The green VREF bug and white VREF +15 bug are shown when a speed greater than 80 knots is set.

Note: If V1 or VR is selected in flight, INVALID ENTRY is displayed.

To set the spare bug, if desired:

Speed reference selector (outer) ..... Spare bug

Default speed of 60 knots is displayed.

Speed reference selector (inner) ..... Set

Set speed as desired.

Speed reference selector (outer) ..... SET

Digital readout is removed.

Copyright © The Boeing Company. See title page for details.

HUD System Procedures

[Option]

HUD system procedures supplement normal procedures and should be accomplished when applicable.

Flight Deck Preparation

If the HUD will be used for takeoff, or configured for a possible return for landing, accomplish the following during the flight deck preparation:

HUD System .....Set

Combiner – Lowered, cover removed

Runway Data – Set in control panel

Enter runway length

Enter TDZE (if available) or field elevation

Enter glideslope angle for possible return for landing.

Mode – Set

Select IMC or VMC to verify proper alignment

ALIGN HUD light – Extinguished

After checking alignment, set mode as desired.

Note: CLR may be selected to blank display during taxi. Push CLR again to restore display. If the HUD will not be used for takeoff, the combiner should be stowed.

For low visibility takeoff, enter ILS frequency and course.

Descent and Approach

If HUD will be used for approach and landing, accomplish the following steps:

Prior to completing the DESCENT–APPROACH checklist:

HUD System .....Set

Combiner – Lowered, cover removed

Runway Data – Set in control panel

Enter runway TDZE (if available) or field elevation.

Copyright © The Boeing Company. See title page for details.

Enter glideslope angle.

Mode – Set

Select IMC or VMC to verify proper alignment

ALIGN HUD light – Extinguished

After checking alignment, set mode as desired.

Prior to intercepting final:

Select IMC mode for instrument approach

Select VMC mode for visual approach.

Note: During approach, the first officer will monitor the HUD ANNUNCIATOR panel.

Landing

If HUD will be used for a CAT II or CAT IIIa approach:

At glideslope capture:

Select/verify AIII mode active.

Shutdown

Accomplish the following step during the Shutdown Procedure:

HUD Combiner ..... Stowed

If the airplane will be secured, install cover before stowing.

Copyright © The Boeing Company. See title page for details.

ILS Approach Using HUD

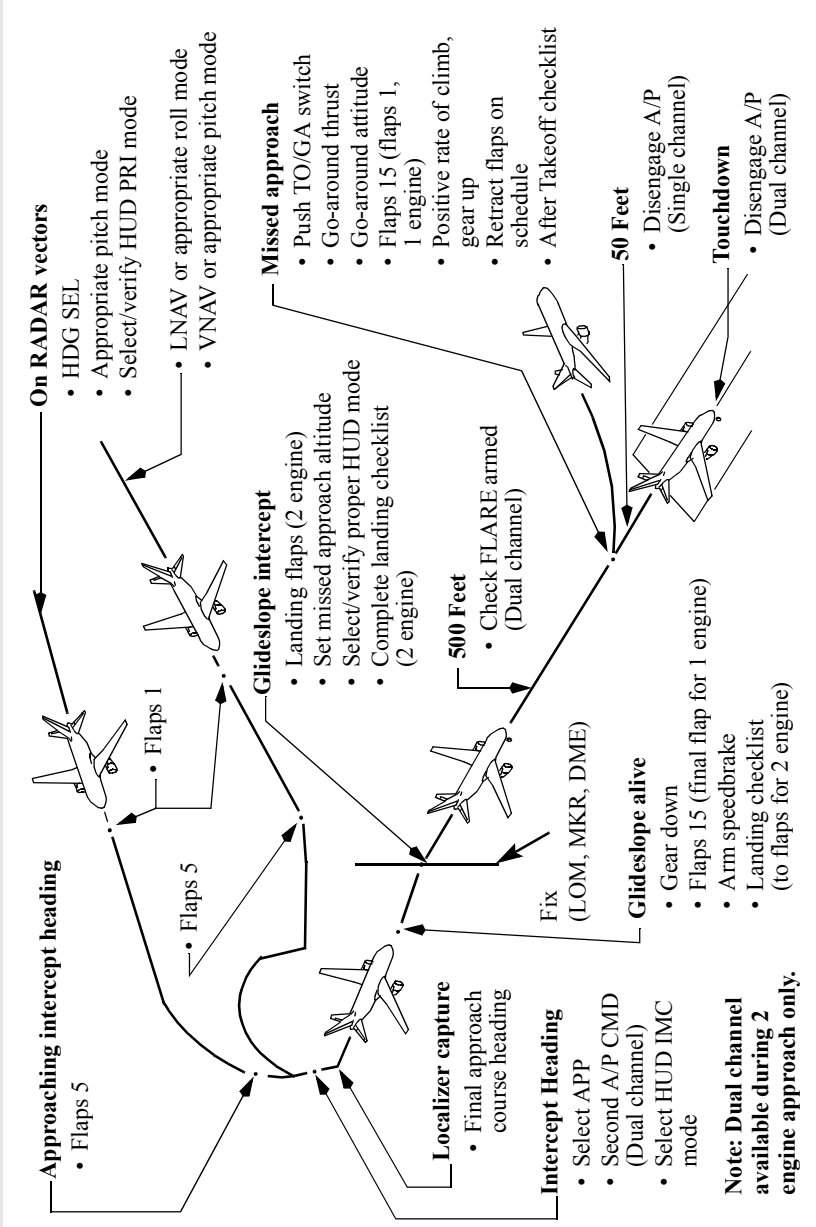

Copyright © The Boeing Company. See title page for details.

DO NOT USE FOR FLIGHT

Non-Precision Approach Using HUD

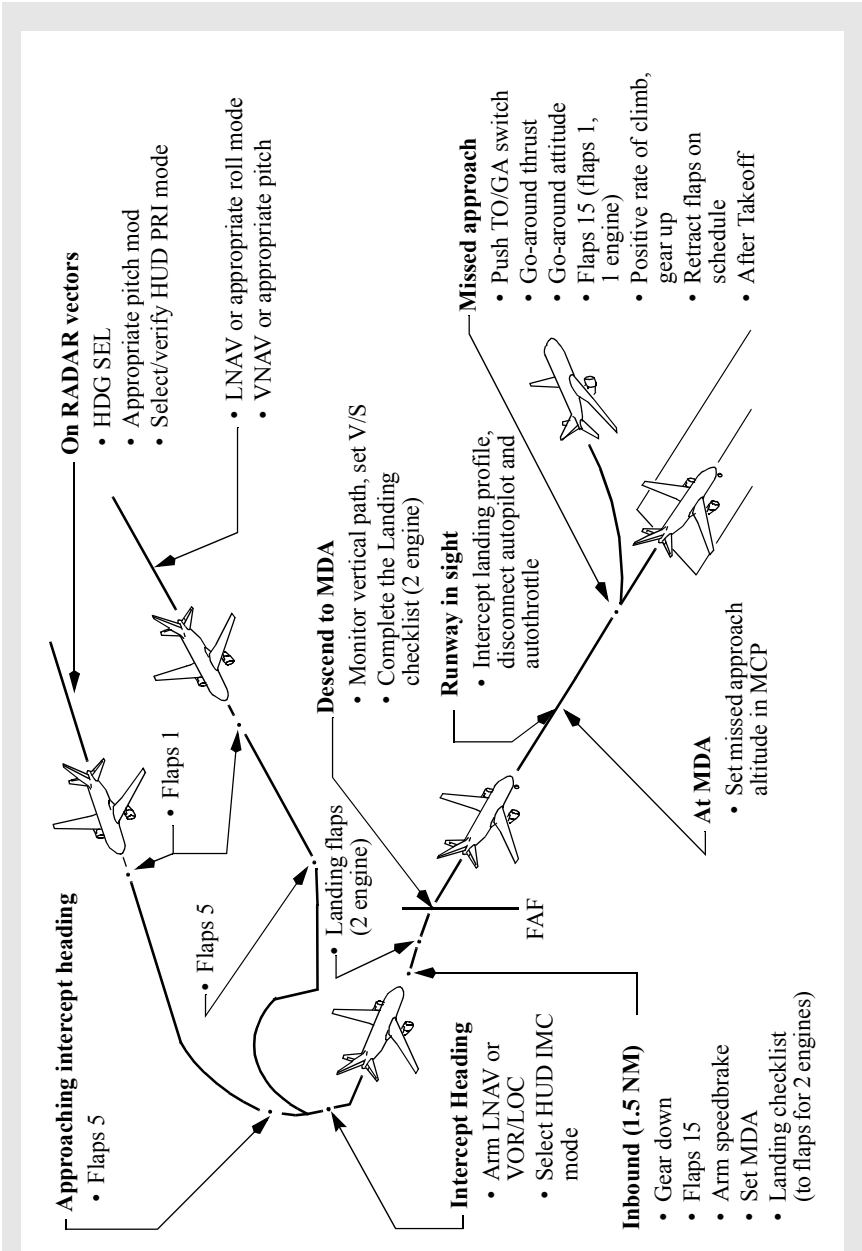

Copyright © The Boeing Company. See title page for details.

Circling Approach Using HUD

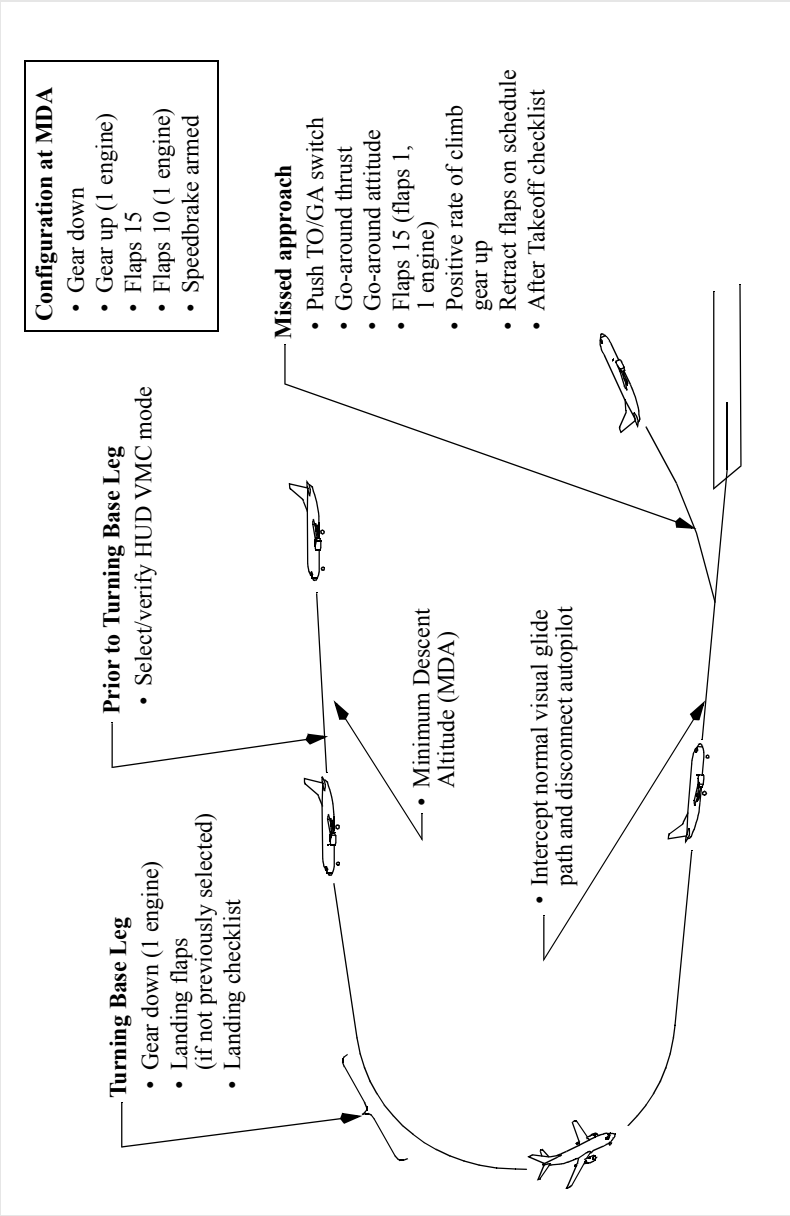

Copyright © The Boeing Company. See title page for details.

Visual Traffic Pattern Using HUD

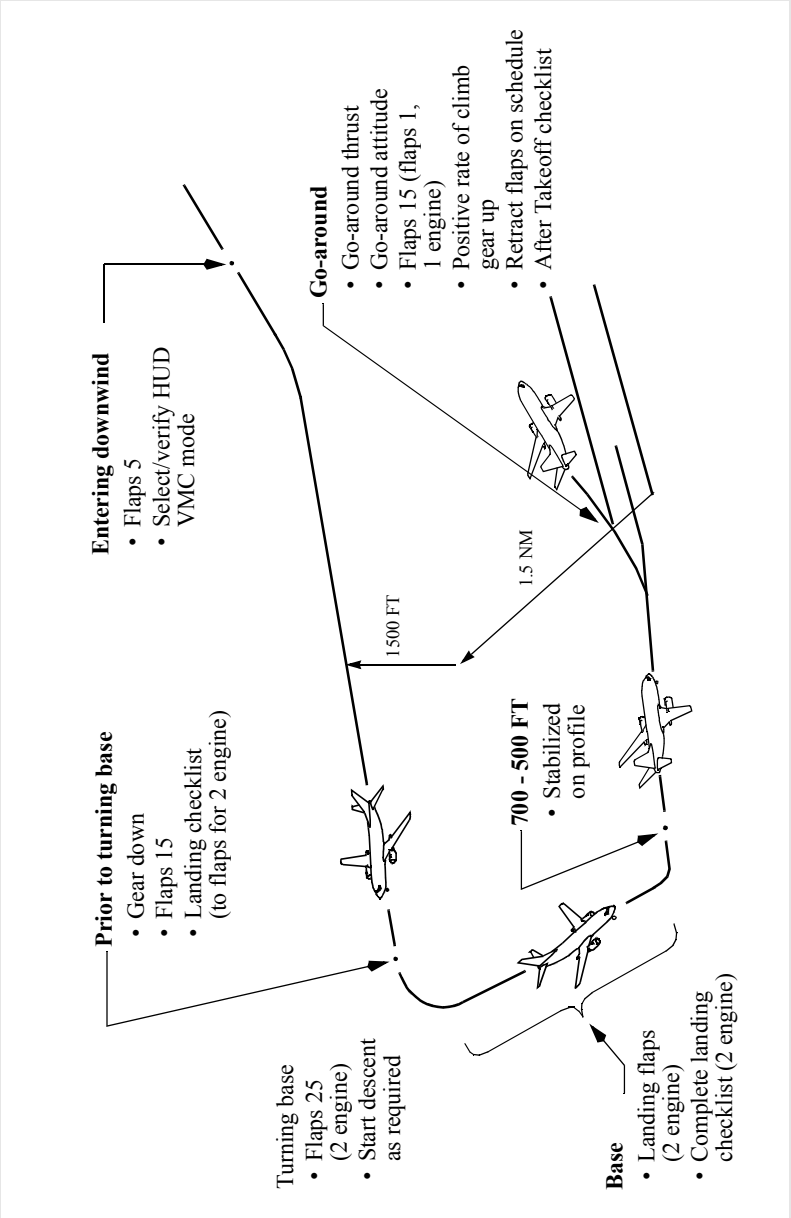

Copyright © The Boeing Company. See title page for details.

Tests

Transponder Test

Transponder mode selector ..... TEST

Check fail light illuminates.

Check all code segments illuminate. Verify no error codes exist.

Verify aural indicates TCAS system test passed.

Note: TCAS TEST is displayed on the navigation display during the test followed by TCAS TEST PASSED or TCAS TEST FAILED. This test remains in view for 8 seconds then blanks. An aural annunciation sounds at the completion of the test.

[Option - Allied Signal TCAS computer]

AURAL ALERTS	DEFINITION
“TCAS SYSTEM TEST FAIL”	Test failed. Maintenance required.
“TCAS SYSTEM TEST OK”	Test complete. System operable.

Weather Radar Test

EFIS mode selector .....MAP, MAP CTR, VOR, or APP

Weather Radar Mode ..... TEST

STAB .....ON

WXR (EFIS control panel) .....ON

Verify test pattern consisting of the following colors appears:

- Green
- Yellow
- Red
- Magenta.

Copyright © The Boeing Company. See title page for details.

DO NOT USE FOR FLIGHT

[Option - With predictive wind shear]
If testing of the PWS system is desired:

Weather Radar Mode .....Deselect TEST

WXR (EFIS control panel) ..... ON

Weather Radar Mode .....TEST

Verify the amber WINDSHEAR caution, red WINDSHEAR warning and PWS FAIL annunciations display momentarily and then extinquish.

Note: In the short time the weather radar is on and not in the TEST position, it will radiate.

IRS

Fast Realignment

Prior to commencing procedure the airplane must be parked and not moved until procedure is complete and ALIGN lights extinguish.

IRS mode selectors .....ALIGN

Observe ALIGN lights illuminate steadily.

CDU ..... Set

Enter present position on SET IRS POS line of the POS INIT page.

IRS mode selector ..... NAV

Observe ALIGN light extinguished within 30 seconds.

Note: If time permits it is preferable to perform a full alignment of the IRS. A more precise alignment will result.

Note: If the mode selector is accidentally switched to OFF or ATT, position mode selector to OFF, wait for ALIGN light(s) to extinguish, then perform full alignment procedure.

ISDU Entries

Heading Entry

Note: Due to IRS drift rate when in ATT mode, periodic heading updates are required.

Copyright © The Boeing Company. See title page for details.

IRS display selector ..... HDG

Push H key to initiate a heading entry.

Key–in present magnetic heading. Push ENT key (cue lights extinguish). Observe proper heading shown on the navigation displays.

Present Position Entry

IRS mode selectors .....NAV

ALIGN lights must be illuminated (steady or flashing)

IRS display selector ..... PPOS

Latitude ..... Enter

Key–in latitude into data display, beginning with N or S, then push ENT Key (cue lights extinguish).

Longitude ..... Enter

Key–in longitude into data display, beginning with E or W, then push ENT key (cue lights extinguish). Observe proper latitude and longitude are displayed and ALIGN light is not flashing.

Inadvertent Selection of Attitude Mode (while on the ground)

Inadvertent selection of the attitude mode may be due to physically overpowering the switch during turn–on or may be the result of a faulty switch which prevents the flight crew from accurately determining which mode is selected.

If ATT position is selected inadvertently when switching to NAV

IRS mode selectors ..... OFF

Observe ALIGN lights extinquish.

After ALIGN lights extinquish, initiate a full alignment.

Lateral Navigation (LNAV)

Proceeding Direct to a Waypoint (overwrite)

RTE LEGS page ..... Select

On page 1/XX, line 1L, enter desired waypoint over the presently active waypoint.

Correct any ROUTE DISCONTINUITY if entered waypoint was not in original flight plan.

Copyright © The Boeing Company. See title page for details.

[Option - With abeam points]
If abeam waypoints are desired:

ABEAM PTS key ..... Push

EXEC key ..... Push

Observe the MOD RTE LEGS page changes to ACT.

Proceeding Direct to a Waypoint (DIR/INTC)

[Option - CDU]

DIR INTC key ..... Push

Observe DIRECT TO box prompts displayed in line 6L.

Enter desired waypoint on the DIRECT TO line. Observe the waypoint automatically transfers to line 1L.

Correct any ROUTE DISCONTINUITY if entered waypoint was not in the original flight plan.

EXEC key ..... Push

Observe MOD RTE LEGS page changes to ACT.

Intercepting a Leg (Course) to a Waypoint

RTE LEGS page ..... Select

On page 1/XX, line 1L, enter desired waypoint over presently active waypoint.

Observe INTC CRS prompt displayed in line 6R.

Enter the desired intercept course in the INTC CRS line. Observe the desired course is displayed on line 6R but, with magnetic variation differences in line 1.

Correct any ROUTE DISCONTINUITY if the entered waypoint was not in original flight plan.

EXEC key ..... Push

Observe MOD RTE LEGS page changes to ACT.

LNAV may disengage after execution of an intercept leg to a waypoint. If LNAV disengages, turn to a heading to satisfy LNAV capture criteria, as described in Chapter 11, and then engage LNAV.

Copyright © The Boeing Company. See title page for details.

Intercepting a Leg (Course) to a Waypoint (DIR/INTC)
[Option - CDU]

DIR INTC key ..... Push

Observe INTC LEG TO box prompts displayed in line 6R.

Enter the desired waypoint on the INTC LEG TO line. Observe the waypoint automatically transfers to line 1L.

Enter the desired intercept course in the INTC CRS line. Observe the desired course is displayed on line 6R but, with magnetic variation differences in line 1.

Correct any ROUTE DISCONTINUITY if the entered waypoint was not in original flight plan.

EXEC key ..... Push

Observe MOD RTE LEGS page changes to ACT.

LNAV may disengage after execution of an intercept leg to a waypoint. If LNAV disengages, turn to a heading to satisfy LNAV capture criteria, as described in Chapter 11, and then engage LNAV.

Route Modification

RTE LEGS or RTE page ..... Select

Line select existing waypoints in the desired sequence.

Key–in any new waypoints in the scratch pad and line select into the flight plan. Correct any ROUTE DISCONTINUITIES.

EXEC key ..... Push

Observe MOD RTE or MOD RTE LEGS page changes to ACT.

Route Removal

RTE page ..... Select

ORIGIN ..... Enter

If EXEC key illuminates

EXEC key ..... Push

Copyright © The Boeing Company. See title page for details.

DO NOT USE FOR FLIGHT

Linking a Route Discontinuity

Correct the ROUTE DISCONTINUITY by entering or deleting waypoints in a sequence that provides a continuous flight–plan path.

EXEC key ..... Push

Observe MOD RTE or MOD RTE LEGS page changes to ACT.

Determining ETA and Distance to Cross Radial (Bearing) or Distance from a Fix

FIX INFO page ..... Select

Enter the identifier of the reference waypoint (normally an off–route waypoint) onto the FIX line. Enter the desired radial or distance from the FIX on a RAD/DIS line, or line select the ABM prompt if the desired radial from the FIX is perpendicular to the present route/course.

Time and distance to go ..... Check

Check ETA and DTG, as desired.

Note: If ETA and DTG are not displayed, the fix radial and/or distance do not intersect the route.

Changing Destination

RTE page ..... Select

Enter the new destination over the original DEST. Enter desired routing to the new destination using the RTE, RTE LEGS, and ARRIVALS pages, as appropriate. Correct any ROUTE DISCONTINUITY.

EXEC key ..... Push

Observe the MOD RTE or MOD RTE LEGS page changes to ACT.

Note: If destination is changed during climb, performance predictions may be blanked if the new flight plan is incompatible with the entered cruise altitude. Correct by entering a lower CRZ ALT on the CLB page.

Entering Holding Fix Into Route

HOLD key ..... Push

Copyright © The Boeing Company. See title page for details.

(If RTE HOLD page is displayed, observe NEXT HOLD prompt. Line select 6L until (RTE LEGS) HOLD AT page is displayed.)

Observe HOLD AT box prompts and PPOS prompt (if in flight) are displayed. Enter the holding fix in line 6L, or line select PPOS.

If the holding fix is a waypoint in the active route, or PPOS was selected, observe MOD RTE HOLD page displayed. If the holding fix is a waypoint not in the active route, observe message HOLD AT XXXXX displayed in the scratch pad. Enter the holding fix into the route by line selecting in the desired waypoint sequence. Observe the MOD RTE HOLD page displayed. If displayed holding details are incorrect or inadequate, enter correct information on appropriate line(s).

EXEC key ..... Push

Observe MOD RTE HOLD page changes to RTE HOLD (ACT RTE HOLD if holding at PPOS).

Exiting Holding Pattern

HOLD key ..... Push

Observe EXIT HOLD prompt displayed.

EXIT HOLD line select key ..... Push

Observe EXIT HOLD prompt changes to EXIT ARMED.

EXEC key ..... Push

Observe EXIT ARMED is highlighted in reverse video and LNAV flight returns to the holding fix and resumes the active route.

Note: The holding pattern may be exited by performing a DIRECT TO modification if desired. In this case, the flight path may not return to the holding fix before proceeding to the selected waypoint.

[Option - FMC update U10.2 and later]

Note: A late sequencing of the hold exit waypoint may occur if multiple route modifications are performed just prior to exiting the hold. LNAV guidance may be temporarily interrupted while sequencing the hold exit waypoint.

Along Track Displacement

RTE LEGS page ..... Select

Copyright © The Boeing Company. See title page for details.

Line select the reference waypoint to the scratch pad. Add a "/" and the + or – distance desired. (EX: SEA/15 for a point 15 miles downtrack from SEA)

Line select the reference waypoint. (The FMC will automatically position the created waypoint to appropriate position.)

EXEC key ..... Push

Observe the MOD RTE LEGS page change to ACT.

Entering Created Waypoints on the Route or Route Legs Pages

Note: Created waypoints are stored in the temporary navigation data base for one flight only.

RTE or RTE LEGS page ..... Select

Using any of the following methods, key into the scratch pad the parameters which define the new created waypoint (place identifiers must already be stored in one of the FMC data bases):
- Place bearing/distance (for example, SEA250/40);
- Place bearing/place bearing (for example, SEA180/ELN270);
- Along–track displacement (for example, SEA/-10);
- Latitude and longitude (for example, N4731.8W12218.3).

Enter into the route by line selecting to the appropriate waypoint sequence.

Repeat the above steps to define additional created waypoints as desired. Correct any ROUTE DISCONTINUITY.

EXEC key ..... Push

Observe the MOD RTE or MOD RTE LEGS page changes to ACT (for an inactive route, activate and execute on the RTE or RTE LEGS page).

Entering Created Waypoints on the Nav Data Pages

Note: Created waypoints entered on the SUPP NAV DATA pages (permitted on the ground only) are stored in the supplemental navigation data base for an indefinite time period; those entered on REF NAV DATA pages are stored in the temporary navigation data base for one flight only.

INIT/REF key ..... Push

Observe INDEX prompt displayed.

Copyright © The Boeing Company. See title page for details.

INIT/REF INDEX page ..... Select

Observe the NAV DATA prompt displayed. To access the SUPP NAV DATA page, enter SUPP into the scratch pad.

NAV DATA page ..... Select

(If the SUPP NAV DATA page is selected, observe the EFF FRM date line displayed. If an effective date had not been previously entered, box prompts are displayed. The effective date must be entered before proceeding. If required, enter the current or appropriate date on EFF FRM line and execute.)

Data ..... Enter

Enter a crew-assigned identifier on either the WPT IDENT, NAVAID IDENT, or AIRPORT IDENT line, as appropriate. Use the navaid category only for stations with DME.

For a WPT IDENT entry, define the waypoint with entries for either latitude and longitude, or with entries for REF IDENT and RADIAL/DIST (REF IDENT identifier must already be stored in one of the FMC data bases).

For a NAVAID IDENT or AIRPORT IDENT entry, enter appropriate data.

EXEC key illuminates when data has been entered into all box prompts.

EXEC key ..... Push

Repeat above steps to define additional created waypoints as desired. To enter a new identifier in the same category, simply overwrite the previous identifier.

Note: To enter a created waypoint into the flight plan, key the identifier into the scratch pad and follow the route modification procedure.

Deleting Created Waypoints on the Nav Data Pages

INIT/REF key ..... Push

Observe the INDEX prompt displayed.

INIT/REF INDEX page ..... Select

Copyright © The Boeing Company. See title page for details.

DO NOT USE FOR FLIGHT

Observe the NAV DATA prompt displayed. To access the SUPP NAV DATA page, key SUPP into the scratch pad.

NAV DATA page ..... Select

Enter the identifier on either the WPT IDENT, NAVAID IDENT, or AIRPORT IDENT line, as appropriate.

Data .....Delete

Push the DEL key and then line select the identifier. Observe the EXEC key illuminates.

EXEC key ..... Push

Data previously entered is deleted. Observe NAV DATA page displayed with prompts.

Entering a Crossing Radial (Bearing) or Distance from a Fix as a Route Waypoint

FIX INFO page ..... Select

Enter identifier of the reference waypoint (normally an off–route waypoint) onto the FIX line. Enter the desired radial or distance from the FIX on a RAD/DIS line, or line select the ABM prompt if the desired radial or distance from the FIX is perpendicular to the present route/course.

Line select the desired intersection (lines 2L–5L) into the scratch pad and observe the new created waypoint displayed as FIX/Radial/Distance.

RTE LEGS page ..... Select

Line select the new created waypoint, displayed in the scratch pad, to the desired waypoint sequence.

Repeat the above steps to define additional created waypoints as desired. Correct any ROUTE DISCONTINUITIES.

EXEC key ..... Push

Observe the MOD RTE LEGS page changes to ACT.

Note: These created waypoints are stored in the temporary navigation data base for one flight only.

Copyright © The Boeing Company. See title page for details.

Entering a Lateral Offset

RTE page ..... Select

Observe the OFFSET prompt displayed.

LATERAL OFFSET page ..... Select

Observe dash prompts for OFFSET DIST.

OFFSET DIST ..... Enter

Enter desired offset distance using format Lxx or Rxx for left or right offset up to 99 nm. Observe dash prompts for START WAYPOINT and END WAYPOINT.

START/END WAYPOINT ..... Enter

If no start/end waypoint is entered, offset will begin/end at first/last valid offset leg.

Change SID or Runway

This entire procedure must be accomplished when a SID is used and the runway or SID is changed. This will prevent the possibility of incorrect routing or inadequate obstacle clearance.

DEPARTURES page ..... Select

RUNWAY ..... Reselect

SID ..... Reselect

TRANSITION (if required) ..... Reselect

RTE LEGS page ..... Select

WAYPOINT SEQUENCE and ALTITUDES ..... Check

Modify as necessary to agree with clearance.

EXEC key ..... Push

Change STAR, PROF DES, or APP

The associated airport must be entered as route origin or destination.

ARRIVAL page ..... Select

STAR or PROFILE DESCENT (if required) ..... Select

TRANSITION (if required) ..... Select

Copyright © The Boeing Company. See title page for details.

DO NOT USE FOR FLIGHT

APPROACH ..... Select

APPROACH TRANSITION (if required) ..... Select

RTE LEGS page ..... Select

WAYPOINT SEQUENCE .....CHECK

Modify as necessary to agree with clearance.

EXEC key ..... Push

Delete Procedure Turn

DEP/ARR page ..... Select

Approach ..... Select

Reselecting same approach or selecting a new approach will remove procedure turn and select a straight in approach on the LEGS page.

EXEC key ..... Push

or

RTE LEGS page ..... Select

Select last waypoint of procedure turn to scratchpad and overwrite PROC TURN line. Check waypoint sequencing to comply with clearance.

EXEC key ..... Push

Other Operations

FMC Navigation Check

If the IRS NAV ONLY, VERIFY POSITION, or UNABLE REQUIRED NAV PERFORMANCE – RNP message is displayed in the scratch pad, or course deviation is suspected, accomplish the following as necessary to ensure navigation accuracy:

Actual position ..... Determine and compare with FMC position

Determine actual airplane position using raw data from VHF navigation or ADF radios.

If radio navaids are unavailable:

FMC position ..... Compare with the IRS position

Use the POS SHIFT page of the FMC CDU. If the two IRS positions are in agreement and the FMC position is significantly different, the

Copyright © The Boeing Company. See title page for details.

FMC position is probably unreliable. The POS SHIFT page may be used to shift FMC position to one of the IRS positions. This is accomplished by line selecting the IRS or radio position and then pressing the EXEC Key.

Actual position.....Confirm with ATC radar or visual reference points.

Navigate using most accurate information available (continue to monitor FMC position using VOR/ADF raw data displays on non–flying pilot's navigation display).

CAUTION: Navigating in LNAV mode with an unreliable FMC position may result in significant navigation errors.

Navigate by conventional VOR/ADF procedures, radar vectors from ATC, dead reckoning from last known position, and/or use of visual references.

Inhibiting VOR/DME Use for Position Updating

Note: This procedure inhibits the use of VOR/DME information for FMC position updating. Use DEL key to remove a VOR/DME from inhibit status.

PROG page ..... Select

Observe NAV STATUS prompt displayed.

NAV STATUS page ..... Select

NAV OPTIONS page .....Select (NEXT/PREV page)

Observe dash prompts for VOR/DME INHIBIT. Enter desired VOR/DME identifier (a previous entry may be overwritten but will no longer be inhibited).

Inhibiting GPS Updating

[Option - With GPS]

Note: GPS position updates are allowed for all United States National Airspace approach operations. Outside this region, GPS position updates are allowed during approaches only if the FMC database and approach charts are referenced to the WGS-84 reference datum. GPS updates should be inhibited for all other approach operations.

PROG page ..... Select

Observe NAV STATUS prompt displayed.

Copyright © The Boeing Company. See title page for details.

NAV STATUS page ..... Select

NAV OPTIONS page ..... Select (NEXT/PREV page)

GPS UPDATE .....OFF

Vertical Navigation (VNAV)

Temporary Level Off during Climb or Descent (Not at FMC Cruise Altitude)

MCP altitude selector .....Set desired altitude

[Option - With VNAV ALT]

Observe VNAV ALT on flight mode annunciator as level off is initiated.

MCP N1 light will extinquish if leveling from a climb.

N1 Limit changes to CRZ if leveling from a climb.

To continue climb/descent:

MCP altitude selector .....Set desired altitude

ALT INTV switch ..... Push

Observe climb or descent initiated. Mode annunciations appear as initial climb or descent.

Intervention of FMC Altitude Constraints during VNAV Climb

[Option - With speed and altitude intervention]

MCP altitude selector ..... Set new altitude

New altitude must be higher than the FMC altitude constraint(s) to be deleted.

ALT INTV switch ..... Push

Each push of the ALT INTV switch will delete an FMC altitude constraint.

Intervention of FMC Cruise Altitude during VNAV Cruise

[Option - With speed and altitude intervention]

MCP altitude selector ..... Set

Copyright © The Boeing Company. See title page for details.

ALT INTV switch ..... Push

If a higher altitude is selected, a CRZ climb will be initiated.

If a lower altitude is selected, an early descent will be initiated.

Intervention of FMC Altitude Constraints during VNAV Descent

[Option - With speed and altitude intervention]

MCP altitude selector ..... Set new altitude

New altitude must be lower than the FMC altitude constant (s) to be deleted.

ALT INTV switch ..... Push

Each push of the ALT INTV switch will delete an FMC altitude constraint.

If all FMC altitude constraints are deleted, the descent mode will revert to a VNAV speed descent.

Intervention of FMC Airspeed Constraints during VNAV

[Option - With speed and altitude intervention]

SPD INTV switch ..... Push

MCP IAS/MACH display shows current FMC target speed.

MCP speed selector ..... Set desired speed

VNAV remains engaged.

To resume former FMC speed:

SPD INTV switch ..... Push

MCP IAS/MACH display blanks and FMC commanded VNAV speed is active.

Entering Waypoint Speed and Altitude Restriction (On Climb or Descent Legs Only)

RTE LEGS page ..... Select

Key–in desired speed and altitude, or speed only (followed by /), or altitude only, into scratch pad.

An altitude followed by A or B signifies a requirement to be “at or above” or “at or below” that altitude at the waypoint (for example, key–in 220A or 240B).

Line select to desired waypoint line.

Copyright © The Boeing Company. See title page for details.

DO NOT USE FOR FLIGHT

EXEC key ..... Push

Observe MOD RTE LEGS page changes to ACT.

Note: This changes any prior speed and altitude restriction at this waypoint.

Deleting Waypoint Speed and Altitude Restriction

RTE LEGS page ..... Select

Push DEL key to enter DELETE in scratch pad. Line select to appropriate waypoint line.

EXEC key ..... Push

Observe MOD RTE LEGS page changes to ACT and restriction is deleted and replaced with an FMC predicted value (small size characters).

Changing Speed and/or Altitude Restriction during Climb or Descent

CLB/DES page ..... Select

Push DEL key to enter DELETE in the scratch pad, or key–in the desired speed and altitude in the scratch pad. Line select to the SPD REST line.

EXEC key ..... Push

Observe the MOD CLB or the MOD DES page changes to ACT and the restriction is changed or deleted.

Changing Climb/Cruise/Descent Speed Schedule

CLB/CRZ/DES page ..... Select

Select the prompt for the desired climb/cruise/descent schedule, or key–in the desired speed in the scratch pad and line select to the TGT SPD line.

EXEC key ..... Push

Observe the MOD CLB, MOD CRZ, or MOD DES page changes to ACT and new speed schedule is specified.

Early Descent

MCP altitude selector ..... Set

Set next level–off altitude.

Copyright © The Boeing Company. See title page for details.

DES page ..... Select

Line select DES NOW prompt.

EXEC key ..... Push

Observe MOD DES page changes to ACT. Observe descent is initiated (if VNAV engaged).

Note: For a PATH DES, this will result in a 1000 FPM rate of descent until the planned path is intercepted. For a SPD DES, this will result in an idle thrust normal rate of descent.

Step Climb or Descent from Cruise

MCP altitude selector ..... Set

Set new level–off altitude.

CRZ page ..... Select

Enter new altitude on the CRZ ALT line. The display changes to MOD CRZ CLB or MOD CRZ DES.

If the desired climb/descent speed is different from the displayed cruise speed, manually enter the desired TGT SPD, or use access prompts to select desired CLB/DES page.

EXEC key ..... Push

Observe the MOD CRZ CLB/MOD CRZ DES page (or other selected MOD CLB/MOD DES page) changes to ACT. Observe climb/descent is initiated at the TGT SPD (if VNAV engaged).

Performance and Progress Functions

Determining ETA and Fuel Remaining for New Destination

RTE page ..... Select

Enter the new destination over the original DEST. Enter correct routing to the new destination using RTE, RTE LEGS, and ARRIVALS pages, as appropriate. Correct any ROUTE DISCONTINUITY.

PROGRESS page ..... Select

Observe new destination with a MOD title. Check ETA and FUEL remaining.

Copyright © The Boeing Company. See title page for details.

DO NOT USE FOR FLIGHT

RTE page ..... Select

EXEC or ERASE the new destination/routing, as desired. Observe MOD RTE page changes to ACT.

Estimated Wind Entries for Cruise Waypoints

RTE LEGS page ..... Select

Observe the DATA prompt displayed.

RTE DATA page ..... Select

Enter the estimated true wind direction/speed on the appropriate line(s).

Step Climb Evaluation

CRZ page ..... Select

Enter the desired step climb altitude on the STEP line. If known, enter the estimated average true wind direction/speed for the desired step climb altitude on the ACTUAL WIND line.

Step climb savings ..... Determine

Observe the fuel SAVINGS/PENALTY and FUEL AT _____ (destination) lines to determine if a higher cruise altitude is advantageous.

If step climb fuel savings are significant, use the appropriate climb procedure to initiate climb to the higher altitude when NOW is displayed on STEP POINT line.

Note: Step climb evaluations do not consider buffet margin limits. If the altitude entered for the step climb evaluation is higher than the maximum altitude for flight with an adequate buffet margin, the message “MAX ALT FLXXX” will be displayed in the scratch pad. Ensure the new cruise altitude entered for the climb is at or below the MAX ALT displayed in the message in order to maintain a safe buffet margin.

Entering Descent Forecasts

DES page ..... Select

Observe FORECAST prompt displayed.

DES FORECASTS page ..... Select

Copyright © The Boeing Company. See title page for details.

Verify the TRANS LVL and revise if required. Enter average ISA DEV forecast for descent and destination QNH. Enter forecast descent WINDs (for up to three different altitudes).

EXEC key ..... Push

Observe MOD DES FORECASTS page changes to ACT.

Engine Out

Engine out climb and cruise pages provide advisory information for engine out operation. Refer to section 11.41 and 11.42 for a complete description of ENG OUT CLB and ENG OUT CRZ pages.

Required Time of Arrival (RTA)

Note: An active FMC flight plan complete with all performance data must exist before the required time of arrival (RTA) mode can be used.

Entering an RTA Waypoint and Time

RTA PROGRESS page ..... Select

On PROGRESS page 2, line 1L, enter the flight plan waypoint where required time of arrival is applicable. Observe the MOD RTA PROGRESS page displayed with the computed ETA, for the entered waypoint, displayed in line 1R.

RTA ..... Enter

Enter required time of arrival into line 1R. Time should be entered in hours, minutes, and seconds (Examples: 174530, 1745, 1745.5). Observe MOD RTA PROGRESS page displayed with pertinent data for complying with entered RTA. Observe EXEC key illuminated.

EXEC key ..... Push

Observe ACT RTA PROGRESS page displayed.

Entering Speed Restrictions for RTA Navigation

PERF LIMITS page ..... Select

Enter minimum or maximum speed restriction for RTA navigation in lines 2, 3, or 4 depending on phase of flight. Observe RTA parameters change to reflect new limits (RTA PROGRESS page) and EXEC key illuminated.

Copyright © The Boeing Company. See title page for details.

EXEC key ..... Push

Observe MOD PERF LIMITS page change to ACT PERF LIMITS page.

Note: Entered restrictions on line 2, 3, and 4 also restrict other navigation modes such as ECON.

Entering New Time Error Tolerances for RTA Navigation

PERF LIMITS page ..... Select

Enter desired time error tolerance (5 to 30 seconds) for the RTA waypoint on line 1L (Example: 25). Observe MOD PERF LIMITS page displayed and EXEC key illuminated.

EXEC key ..... Push

Observe ACT PERF LIMITS page displayed.

Additional CDU Functions

Navigation Display Plan Mode (Center Step Operation)

EFIS Control Panel Mode Selector .....PLAN

RTE LEGS page ..... Select

EFIS Control Panel Range Selector ..... As required

MAP CTR STEP key ..... Push

Each push moves the CTR label to the next geographically fixed waypoint in the route. Selecting PREV PAGE or NEXT PAGE moves the CTR label to the first geographically fixed waypoint on the new page.

EFIS Control Panel Mode Selector ..... As required

Enter Position Shift on Runway

TAKEOFF REF page ..... Select

[Option - Runway position update with TO/GA activation]
TO SHIFT distance .....Enter

Enter distance desired from runway threshold. When TO/GA is pushed, FMC will update position to runway threshold plus entered distance.

[Option - Runway remaining update with TO/GA activation]
RWY REMAIN distance .....Enter

Enter runway remaining distance. When TO/GA is pushed, FMC will update to the runway remaining distance.

Copyright © The Boeing Company. See title page for details.

If position shift must be removed

RTE page ..... Select

RWY ..... Enter

Reenter runway on RTE page. Check and reenter other performance data as required.

Copyright © The Boeing Company. See title page for details.

DO NOT USE FOR FLIGHT

Intentionally
Blank

Copyright © The Boeing Company. See title page for details.

Fuel Balancing

If a fuel leak is suspected:

Accomplish the INFLIGHT ENGINE FUEL LEAK checklist.

Maintain main tank No. 1 and No. 2 fuel balance within limitations.

Note: Fuel pump pressure should be supplied to the engines at all times. At high altitude, without fuel pump pressure, thrust deterioration or engine flameout may occur.

If the center tank contains fuel:

Center tank fuel pump switches ..... OFF

[Fuel CONFIG indication may be displayed with fuel in the center tank.]

Crossfeed selector ..... Open

Fuel pump switches (low tank) ..... OFF

When quantities are balanced:

Fuel pump switches (main tank) ..... ON

Center tank fuel pump switches ..... ON

Crossfeed selector ..... Close

If the center tank contains no fuel:

Crossfeed selector ..... Open

Fuel pump switches (low tank) ..... OFF

When quantities are balanced:

Fuel pump switches ..... ON

Crossfeed selector ..... Close

Copyright © The Boeing Company. See title page for details.

Refueling

Fuel Load Distribution

Main tanks No. 1 and No. 2 should normally be serviced equally until full. Additional fuel is loaded into the center tank until the desired fuel load is reached.

Note: Main tanks No. 1 and No. 2 must be scheduled to be full if the center tank contains more than 453 kgs / 1,000 lbs of fuel. With less than 453 kgs / 1,000 lbs of center tank fuel, partial main tank fuel may be loaded provided the effects of balance have been considered.

Fuel Pressure

Apply from a truck or fuel pit. A nozzle pressure of 50 psi provides approximately 1136 liters / 300 U.S. gallons per minute.

Normal Refueling

[Option - Fuel Quantity selector]
When a full fuel load is required, the fuel shutoff system closes the fueling valves automatically when the tanks are full. When a partial fuel load is required, the fuel shutoff system closes the fueling valves automatically when the quantity preselected on the fuel quantity selector (located on the test gauges and fueling panel) is reached.

[Option - Without Fuel Quantity selector]
When a full fuel load is required, the fuel shutoff system closes the fueling valves automatically when the tanks are full. When a partial fuel load is required, the fuel quantity indicators are monitored and the fueling valves are closed by manually positioning the fueling valve switches to CLOSED when the desired fuel quantity is aboard the airplane.

Refueling with Battery Only

When the APU is inoperative and external power is not available, refueling can be accomplished as follows:

Battery switch ..... ON

Note: The refueling system will operate normally. Operation is limited only by battery life.

Copyright © The Boeing Company. See title page for details.

Refueling with No AC or DC Power Source Available

When it becomes necessary to refuel with the APU inoperative, the aircraft battery depleted, and no external power source available, refueling can still be accomplished:

Fueling hose nozzle .....Attached to the refueling receptacle

Fueling valves ..... Open for the tanks to be refueled

Note: Main tanks No. 1 and No. 2, and the center tank refueling valves each have a red override button that must be pressed and held while fuel is being pumped into the tank. Releasing the override button allows the spring in the valve to close the valve.

Caution must be observed not to overfill a tank, since there is no automatic fuel shutoff during manual operation. When the desired amount of fuel has been pumped into the tanks, the refueling valves for the respective tanks can be released.

Ground Transfer of Fuel

Fuel can be transferred from one tank to another tank by using the appropriate fuel pumps, the fueling valve, the defueling valve, and the crossfeed valve. AC power must be available. To transfer fuel from the main tanks to the center tank:

Main tank fuel pump switches ..... ON

Crossfeed selector ..... Open

Manual defueling valve ..... Open

Center tank fueling valve switch ..... OPEN

Fuel transfer .....Monitor

The center tank fuel quantity indicator shows an increase in fuel. The main tank indicators show a decrease in fuel.

Center tank fueling valve switch ..... CLOSED

When the required amount of fuel has been transferred, the switch is closed at the fueling panel.

Manual defueling valve .....Close

Crossfeed selector .....Close

Main tank fuel pump switches ..... OFF

Copyright © The Boeing Company. See title page for details.

Main Tanks ..... Refill

Refueling panel and defuel panel access doors ..... Close

Fuel Crossfeed Valve Check

Crossfeed selector .....Open

Verify crossfeed VALVE OPEN light illuminates bright and then dim.

Crossfeed selector ..... Close

Verify crossfeed VALVE OPEN light illuminates bright and then extinguishes.

Copyright © The Boeing Company. See title page for details.

Introduction

Airplane operation in adverse weather conditions may require additional considerations due to the effects of extreme temperatures, precipitation, turbulence, and windshear. Procedures in this section supplement normal procedures and should be observed when applicable.

The following recommendations apply to adverse weather operations in general:

- Do not use assumed temperature reduced thrust for takeoff on a contaminated runway.
- V1 may be reduced down to minimum V1 (assuming all weight limitations are considered) to provide increased stopping distance performance.
- Takeoffs on slippery runways are not recommended if the crosswind exceeds 15 knots or when slush or wet snow is more than 1/2 inch (13mm) in depth.
- Improved stall margins can be achieved by the following:
  - If excess runway is available, consider using improved climb procedures for flaps 5.
  - If runway is limited for the planned takeoff flap setting, consider using the next greater flap position with improved climb performance. This will provide additional stall margins with minimum performance penalties.

Cold Weather Operation

Considerations associated with cold weather operation are primarily concerned with low temperatures and with ice and snow on the airplane, ramps, taxiways and runways.

Icing conditions exist when OAT (on the ground) or TAT (inflight) is 10°C (50°F) or below and:

- visible moisture (clouds, fog with visibility less than one mile, rain, snow, sleet, ice crystals, and so on) is present, or
- standing water, ice, or snow is present on the ramps, taxiways, or runways.

CAUTION: Do not operate engine or wing anti–ice when inflight total air temperature (TAT) is above 10°C (50°F.)

Copyright © The Boeing Company. See title page for details.

Preflight

Although removal of surface snow, ice or frost is normally a maintenance function, the flight crew should use additional care and scrutiny during preflight preparation to inspect areas where surface snow or frost could change or affect normal system operations.

Exterior Safety Inspection

Surface ..... Check

[Option: 737-800 without Blended Winglets]
Takeoff with light coatings of frost, up to 1/8 inch (3mm) in thickness on lower wing surfaces due to cold fuel, is permissible; however, all leading edge devices, all control surfaces, tab surfaces, upper wing surfaces and balance panel cavities must be free of snow or ice.

[Option: 737-800 with Blended Winglets]
Takeoff with light coatings of frost, up to 1/8 inch (3mm) in thickness on lower wing surfaces due to cold fuel, is permissible; however, all leading edge devices, all control surfaces, tab surfaces, upper wing surfaces, winglet surfaces and balance panel cavities must be free of snow or ice.

Thin hoarfrost is acceptable on the upper surface of the fuselage provided all vents and ports are clear. Thin hoarfrost is a uniform white deposit of fine crystalline texture, which usually occurs on exposed surfaces on a cold and cloudless night, and which is thin enough to distinguish surface features underneath, such as paint lines, markings or lettering.

Control balance cavities ..... Check

Check drainage after snow removal. Puddled water may refreeze in flight.

Landing gear doors ..... Check

Landing gear doors should be free of snow or ice.

Air conditioning inlets and exits ..... Clear

Verify air inlets and exits, including the outflow valve, are clear of snow or ice. If the APU is operating, check that the outflow valve is full open.

Engine inlets ..... Clear

Check inlet cowling free of ice or snow and verify the fan is free to rotate.

APU air inlets ..... Check

The APU inlet door and cooling air inlet must be free of snow or ice prior to APU start.

Fuel tank vents ..... Clear

Check all fuel tank vents. All traces of ice or frost should be removed.

Copyright © The Boeing Company. See title page for details.

Pitot probes and static ports ..... Clear

Check all pitot probes and static ports free of ice and snow. Water rundown after snow removal may refreeze immediately forward of static ports and cause an ice buildup which disturbs airflow over the static ports resulting in erroneous static readings even when static ports themselves are clear.

Flight Deck Preparation

PROBE HEAT ..... ON

All probe heat lights – extinguished.

Flight controls ..... Check

This check should be accomplished whenever the airplane has been exposed to snow, freezing rain or other conditions which could restrict flight control movement.

Increase in control forces can be expected at low temperatures because of increased resistance in cables and thickened oil in snubbers and bearings.

If any flight control is suspected of binding or restricted movement, maintenance personnel should accomplish the appropriate portion of the flight control checks in SP.9, supplementary procedures.

Engine Start

Accomplish a normal engine start with the following modifications:

- If the engine has been cold soaked for three or more hours at ambient temperatures less than -40°C, do not start or motor the engine. Maintenance personnel should accomplish appropriate procedures for adverse weather starter servicing.
- If ambient temperature is below -35°C (-31°F), idle the engine for two minutes before changing thrust lever position.
- Up to three and one–half minutes may be allowed for oil pressure to reach the minimum operating pressure. During this period, the LOW OIL PRESSURE light may remain illuminated, pressure may go above the normal range and the FILTER BYPASS light may illuminate. Operate the engine at idle thrust until oil pressure returns to the normal range.

After Start

Electrical power ..... Generators ON

Normally engine IDGs stabilize within one minute, although due to cold oil, up to five minutes may be required to produce steady power.

Flight controls ..... Check

Move flight controls through full travel to ensure freedom of movement.

Copyright © The Boeing Company. See title page for details.

Flaps ..... Check

Move flaps through full travel to ensure freedom of movement.

CAUTION: The flap position indicator and leading edge devices annunciator panel should be closely observed for positive movement. If the flaps should stop, the flap lever should be placed immediately in the same position as indicated.

Engine Anti–Ice Operation–On the Ground

Engine anti–ice must be ON during all ground operations when icing conditions exist or are anticipated.

WARNING: Do not rely on airframe visual icing cues before activating engine anti–ice. Use the temperature and visible moisture criteria.

When engine anti–ice is required (on the ground):

[Without automatic ignition]
ENGINE START switches ..... CONT

ENG ANTI–ICE switches ..... ON

COWL VALVE OPEN lights – illuminated dim

COWL ANTI–ICE lights – extinguished

Note: If COWL VALVE OPEN lights remain illuminated bright with engines at IDLE, position APU BLEED air switch to OFF and increase thrust slightly (up to a maximum of 30% N1).

Engine run–up ..... Accomplish as required

Run–up to as high a thrust setting as practical (70% N1 recommended) at 30 minute intervals for approximately 30 seconds duration.

Copyright © The Boeing Company. See title page for details.

Wing Anti–Ice Operation–On the Ground

Wing anti–ice must be ON during all ground operations between engine start and takeoff, when icing conditions exist or are anticipated, unless the airplane is protected by the application of Type II or Type IV fluid in compliance with an approved ground de–icing program.

WARNING: Ground use of the wing anti–ice system is intended to complement, and not replace, ground de–icing/anti–icing and inspection procedures. Close inspection is still required to ensure that no frost, snow or ice is adhering to the wing, leading edge devices, stabilizer, control surfaces, or other critical airplane components at takeoff.

WING ANTI–ICE switch ..... As required

If wing anti–ice switch is ON:

VALVE OPEN lights – illuminated dim

Note: The wing anti–ice VALVE OPEN lights may cycle bright/dim due to control valves cycling closed/open in response to thrust setting and duct temperature logic.

Taxi–Out

Nose wheel steering ..... Check

Nose wheel steering should be exercised in both directions during taxi to circulate warm hydraulic fluid through steering cylinders and minimize steering lag caused by low temperatures.

Flaps ..... As required

If taxi route is through slush or standing water in low temperatures or if precipitation is falling with temperatures below freezing, taxi with flaps up. Taxiing with flaps extended subjects the flaps and flap drives to snow and slush accumulations from the main gear wheels. Leading edge devices are also susceptible to slush accumulations.

If exterior deicing is required:

Flaps ..... UP

Prevents ice and slush from accumulating in flap cavities.

Thrust levers ..... Idle

Reduces the possibility of injury to personnel at inlet or exhaust areas.

Copyright © The Boeing Company. See title page for details.

Stabilizer trim ..... Full APL NOSE DOWN

Set stabilizer to the APL NOSE DOWN limit to prevent deicing fluid and slush run–off from entering the stabilizer balance panel cavity.

Trim the airplane to the electrical APL NOSE DOWN limit. Then continue trimming manually to the manual APL NOSE DOWN limit.

WARNING: To avoid personal injury, ensure that the stabilizer trim wheel handle is stowed prior to using electric trim.

APU and engine BLEED air switches .....OFF

Reduces the possibility of fumes entering the air conditioning system.

APU ..... As required

If not required, the APU should be shut down to eliminate the possibility of deicing fluid entering the APU inlet.

CAUTION: With APU operating, ingestion of deicing fluid causes objectionable fumes and odors to enter the airplane. This may also cause erratic operation or damage to the APU.

Wait approximately one minute after completion of deicing to turn engine BLEED air switches on to ensure all deicing fluid has been cleared from the engine:

Engine BLEED air switches ..... ON

[Without PRR 38506 or Service Bulletin 737-55A-1080]
Control column .....Move full forward/full aft

Slowly cycle the control column full forward to full aft a minimum of three (3) times to drain residual fluid from the elevator balance bay.

Stabilizer trim ..... ___ units

Verify stabilizer trim is set for takeoff.

Before Takeoff

Flaps ..... Set

Extend the flaps to the takeoff setting at this time if they have been held due to slush, or standing water or icing conditions.

Copyright © The Boeing Company. See title page for details.

BEFORE TAKEOFF Checklist ..... Accomplish

To ensure the airplane is configured for takeoff, accomplish the complete BEFORE TAKEOFF checklist.

If airplane deicing was accomplished:

A visual inspection of the airplane wings should be made by the pilots just prior to takeoff.

Engine run–up .....Accomplish as required

If moderate to severe icing conditions are present, takeoff roll must be preceded by a static run–up to 70% N1 and stable engine operation observed prior to brake release. If the airplane starts to slide on ice or snow during engine power check, release brakes and begin takeoff roll. Continue engine check during early part of takeoff roll.

Climb and Cruise

Note: After the flaps are up, wing anti–ice should be used to melt any accumulation of slush.

Engine Anti–Ice Operation-Inflight

Engine anti–ice must be ON during all flight operations when icing conditions exist or are anticipated, except during climb and cruise when the temperature is below –40°C SAT. Engine anti–ice must be ON prior to, and during, descent in all icing conditions, including temperatures below –40°C SAT.

When operating in areas of possible icing, activate engine anti–ice prior to entering icing conditions. Late selection of engine anti–ice may allow inlet ice buildup and ice shedding into the engine.

[Without Icing Advisory Light]

WARNING: Do not rely on airframe visual icing cues before activating engine anti–ice. Use the temperature and visible moisture criteria.

[Option - Icing Advisory Light]

WARNING: Do not rely on airframe visual icing cues or illumination of the ICING light before activating engine anti–ice. Use the temperature and visible moisture criteria.

When engine anti–ice is required inflight:

[Without automatic ignition]

ENGINE START switches .....CONT

Copyright © The Boeing Company. See title page for details.

ENG ANTI–ICE switches ..... ON

COWL VALVE OPEN lights – illuminated dim

COWL ANTI–ICE lights – extinguished

Note: If COWL VALVE OPEN lights remain illuminated bright with engines at IDLE, position APU BLEED air switch to OFF and increase thrust slightly (up to a maximum of 30% N1).

CAUTION: Avoid prolonged operation in moderate to severe icing conditions.

Severe icing can usually be avoided by a change in altitude and/or airspeed. If flight in moderate to severe icing conditions cannot be avoided accomplish the following, on both engines, one engine at a time at approximately 15 minute intervals:

Thrust ..... Increase

Increase thrust to a minimum of 80% N1 to ensure the fan blades and spinner are clear of ice.

Engine vibration may occur due to fan blade/spinner icing. If engine vibration continues after increasing thrust, accomplish the following on both engines, one engine at a time:

ENGINE START switch ..... FLT

Thrust ..... Adjust

Adjust thrust to 45% N1. After approximately five seconds, increase thrust lever slowly to a minimum of 80% N1.

Note: Engine vibration may reduce to a low level before 80% N1 is reached, however, thrust increase must continue to a minimum of 80% N1 to remove ice from the fan blades.

Note: Engine vibration may indicate full scale prior to shedding ice; however, this has no adverse effect on the engine.

If vibration does not decrease, accomplish the procedure for HIGH ENGINE VIBRATION “If not in icing conditions.”

When engine anti–ice is no longer required:

ENG ANTI–ICE switches ..... OFF

COWL VALVE OPEN lights – extinguished

Copyright © The Boeing Company. See title page for details.

[Without automatic ignition]
ENGINE START switches ..... OFF

[Automatic ignition]
ENGINE START switches .....AUTO

Wing Anti–Ice Operation – Inflight

The wing anti–ice system may be used as a de–icer or anti–icer in flight only. The primary method is to use it as a de–icer by allowing ice to accumulate before turning wing anti–ice on. This procedure provides the cleanest airfoil surface, the least possible runback ice formation, and the least thrust and fuel penalty.

The secondary method is to use wing anti—ice prior to ice accumulation. Operate the wing anti–ice system as an anti–icer only during extended operations in moderate or severe icing conditions, such as holding.

Ice accumulation on the flight deck window frames, windshield center post or on the windshield wiper arm may be used as an indication of structural icing conditions and the need to turn on wing anti–ice.

Normally it is not necessary to shed ice periodically unless extended flight through icing conditions is necessary (holding).

CAUTION: Use of wing anti-ice above approximately FL350 may cause bleed trip off and possible loss of cabin pressure.

When wing anti–ice is required:

WING ANTI–ICE switch .....ON

R and L VALVE OPEN lights – illuminated dim

When wing anti–ice is no longer required:

WING ANTI–ICE switch ..... OFF

Note: Prolonged operation in icing conditions with the leading edge and trailing edge flaps extended is not recommended. Holding in icing conditions with flaps extended is prohibited.

Approach and Landing

Use normal procedures and reference speeds unless a flaps 15 landing is planned.

If a flaps 15 landing will be made:

Set VREF 15

Copyright © The Boeing Company. See title page for details.

If any of the following conditions apply, set VREF ICE = VREF 15 + 10:

- engine anti–ice will be used during landing
- wing anti–ice has been used any time during the flight
- icing conditions were encountered during the flight and the landing temperature is below 10° C.

Taxi–In and Park

If prolonged operation in icing conditions with the leading and trailing edge flaps extended was required:

Flaps 15

Retraction to less than flaps 15 is not recommended until ice has been removed or a ground inspection has been made.

After landing in icing conditions:

Stabilizer trim ..... Set 0 to 2 units

Prevents melting snow and ice from running into balance bay areas and prevents the stabilizer limit switch from freezing. With flaps retracted, this requires approximately eight hand wheel turns of manual trim.

WARNING: To avoid personal injury, ensure that the stabilizer trim wheel handle is stowed prior to using electric trim.

Engine anti–ice ..... As required

If icing conditions exist, engine anti–ice must be ON.

Secure (Airplane Attended)

If warm air circulation through cargo and E/E compartments is desired:

APU ..... ON

APU GEN switches ..... ON

PACK switches ..... AUTO

ISOLATION VALVE switch ..... OPEN

Pressurization mode selector ..... MAN

Copyright © The Boeing Company. See title page for details.

Outflow valve switch ..... OPEN

Prevents aircraft pressurization.

Note: The airplane must be parked into the wind when the outflow valve is full open.

APU BLEED switch ..... ON

Secure (Airplane Unattended)

The flight crew should ensure that the following actions are accomplished as required:

Pressurization mode selector ..... MAN

Outflow valve ..... Closed

Inhibits intake of snow and ice.

Wheel chocks ..... Check in place

Parking brakes ..... OFF

Eliminates the possibility of brakes freezing.

Protective covers and plugs ..... Installed

Water storage containers ..... Drained

Toilets ..... Drained

Battery ..... Removed

If the battery will be exposed to temperatures below -18° C (0° F), the battery should be removed and stored in an area warmer than -18° C (0 ° F), but below 40° C (104° F). Subsequent installation of the warm battery ensures the starting capability of the APU.

Doors and sliding windows ..... Closed

Hot Weather Operation

During ground operation the following considerations will help keep the airplane as cool as possible:

- While the airplane is electrically powered, packs should be run or cooling air supplied to the airplane when the OAT exceeds 40° C (103° F) to protect the reliability of electrical and electronic equipment in the airplane.

Copyright © The Boeing Company. See title page for details.

- If cooling air is available from an outside source, the supply should be plugged in immediately after engine shutdown and should not be removed until just prior to engine start.
- Keep all doors and windows, including cargo doors, closed as much as possible.
- Electronic components which contribute to a high temperature level in the flight deck should be turned off while not needed.
- Open all passenger cabin gasper outlets and close all window shades on the sun–exposed side of the passenger cabin.

Brake temperature levels may be reached which can cause the wheel fuse plugs to melt and deflate the tires. Consider the following actions:

- Be aware of brake temperature buildup when operating a series of short flight sectors. The energy absorbed by the brakes from each landing is accumulative.
- Extending the landing gear early during the approach provides additional cooling for tires and brakes.
- In–flight cooling time can be determined from the “Brake Cooling Schedule” in the Performance–Inflight section.

During flight planning consider the following:

- High temperatures inflict performance penalties which must be taken into account on the ground before takeoff.
- Alternate takeoff procedures (No Engine Bleed Takeoff, Improved Climb Performance, etc.)

Moderate to Heavy Rain

Flights should be conducted to avoid thunderstorm or hail activity by overflight or circumnavigation. To the maximum extent possible, moderate to heavy rain should also be avoided.

If heavy rain is encountered:

ENGINE START switches ..... CONT

Thrust Levers ..... Adjust Slowly

If thrust changes are necessary, move the thrust levers slowly. Avoid changing thrust lever direction until engines have stabilized at a selected setting.

Copyright © The Boeing Company. See title page for details.

Turbulence

During flight in light to moderate turbulence, the autopilot and/or autothrottle may remain engaged unless performance is objectionable. Increased thrust lever activity can be expected when encountering wind, temperature changes and large pressure changes. Short–time airspeed excursions of 10 to 15 knots can be expected.

Passenger signs ..... ON

Advise passengers to fasten seat belts prior to entering areas of reported or anticipated turbulence. Instruct flight attendants to check that all passengers' seat belts are fastened.

Severe Turbulence

Autothrottle ..... DISENGAGE

AUTOPILOT ..... CWS

A/P status annunciators display CWS for pitch and roll.

Note: If sustained trimming occurs, disengage the autopilot.

ENGINE START switches ..... FLT

Thrust ..... Set

Set thrust as required for the phase of flight. Change thrust setting only if required to modify an unacceptable speed trend.

Copyright © The Boeing Company. See title page for details.

PHASE OF FLIGHT	AIRSPEED
CLIMB	280 knots or .76 Mach
CRUISE	Use FMC recommended thrust settings. If the FMC is inoperative, refer to the Unreliable Airspeed page in the Performance–Inflight section for approximate N1 settings that maintain near optimum penetration airspeed.
DESCENT	.76 Mach/280/250 knots. If severe turbulence is encountered at altitudes below 15,000 feet and the airplane gross weight is less than the maximum landing weight, the airplane may be slowed to 250 knots in the clean configuration.

Note: If an approach must be made into an area of severe turbulence, delay flap extension as long as possible. The airplane can withstand higher gust loads in the clean configuration.

Copyright © The Boeing Company. See title page for details.

Windshear

Windshear is a change of wind speed and/or direction over a short distance along the flight path. Severe windshear is that which produces airspeed changes greater than 15 knots or vertical speed changes greater than 500 feet per minute.

Avoidance

The flight crew should search for any clues to the presence of windshear along the intended flight path. Stay clear of thunderstorm cells and heavy precipitation and areas of known windshear. If severe windshear is indicated, delay takeoff or do not continue an approach.

The presence of windshear may be indicated by:

- Thunderstorm activity
- Virga (rain that evaporates before reaching the ground)
- PIREPS
- Low level windshear alerting system (LLWAS) warnings

Precaution

If windshear is suspected, be especially alert to any of the danger signals and be prepared for the possibility of an inadvertent encounter. The following precautionary actions are recommended if windshear is suspected:

Takeoff

- Use maximum takeoff thrust instead of reduced thrust.
- Use the longest suitable runway.
- Be alert for any airspeed fluctuations during takeoff and initial climb. Such fluctuations may be the first indication of windshear.
- Know the all–engine initial climb pitch attitude. Rotate at the normal rate to this attitude for all non–engine failure takeoffs. Minimize reductions from the initial climb pitch attitude until terrain and obstruction clearance is assured, unless stick shaker activates.
- Crew coordination and awareness are very important. Develop an awareness of normal values of airspeed, attitude, vertical speed, and airspeed build–up. Closely monitor vertical flight path instruments such as vertical speed and altimeters. The pilot not flying should be especially aware of vertical flight path instruments and call out any deviations from normal.
- Should airspeed fall below the trim airspeed, unusual control column forces may be required to maintain the desired pitch attitude. Stick shaker must be respected at all times.

Copyright © The Boeing Company. See title page for details.

- If windshear should be encountered near VR, and airspeed suddenly decreases, there may not be sufficient runway left to accelerate back to the normal VR. If there is insufficient runway left to stop, initiate a normal rotation at least 2000 feet before the end of the runway even if airspeed is low. Higher than normal attitudes may be required to lift–off in the remaining runway.

Approach and Landing

- Select the minimum landing flap position consistent with field length.
- Add an appropriate airspeed correction (correction applied in the same manner as gust), the maximum command speed should not exceed the lower of Vref + 20 knots or landing flap placard speed minus 5 knots.
- Avoid large thrust reductions or trim changes in response to sudden airspeed increases as these may be followed by airspeed decreases.
- Crosscheck flight director commands using vertical flight path instruments.
- Crew coordination and awareness are very important, particularly at night or in marginal weather conditions. Closely monitor the vertical flight path instruments such as vertical speed, altimeters, and glideslope displacement. The pilot not flying should call out any deviations from normal. Use of the autopilot and autothrottle for the approach may provide more monitoring and recognition time.

Recovery

Accomplish the Windshear Escape Maneuver found in Non–Normal Maneuvers section of this manual.

Copyright © The Boeing Company. See title page for details.

737-600 CFM56-7B22 KG FAA JAR CATD

Takeoff PD.10.1

Takeoff Field Corrections - Dry Runway PD.10.1
Takeoff Field & Climb Limit Weights - Dry Runway PD.10.2
Takeoff Field Corrections - Wet Runway PD.10.4
Takeoff Field & Climb Limit Weights - Wet Runway PD.10.5
Takeoff Obstacle Limit Weight PD.10.7

Enroute PD.11.1

Long Range Cruise Maximum Operating Altitude PD.11.1
Long Range Cruise Trip Fuel and Time PD.11.2
Long Range Cruise Step Climb PD.11.4
Short Trip Fuel and Time PD.11.5
Holding Planning PD.11.5
Crew Oxygen Requirements PD.11.6
Net Level Off Weight PD.11.7
Long Range Cruise Critical Fuel Reserves PD.11.8

Landing PD.12.1

Landing Field Limit Weight PD.12.1
Landing Climb Limit Weight PD.12.2
Go-Around Climb Gradient PD.12.3
Quick Turnaround Limit Weight PD.12.4

Text PD.13.1

Introduction PD.13.1
Takeoff PD.13.1
Enroute PD.13.2
Landing PD.13.4

Copyright © The Boeing Company. See title page for details.

737-700 CFM56-7B24 LB FAA CATB

Takeoff. PD.20.1

Takeoff Field Corrections - Dry Runway. PD.20.1
Takeoff Field & Climb Limit Weights - Dry Runway PD.20.2
Takeoff Field Corrections - Wet Runway. PD.20.4
Takeoff Field & Climb Limit Weights - Wet Runway PD.20.5
Takeoff Obstacle Limit Weight PD.20.7

Enroute PD.21.1

Long Range Cruise Maximum Operating Altitude PD.21.1
Long Range Cruise Trip Fuel and Time PD.21.2
Long Range Cruise Step Climb PD.21.4
Short Trip Fuel and Time PD.21.5
Holding Planning PD.21.5
Crew Oxygen Requirements PD.21.6
Net Level Off Weight PD.21.7
Long Range Cruise Critical Fuel Reserves PD.21.8

Landing PD.22.1

Landing Field Limit Weight. PD.22.1
Landing Climb Limit Weight PD.22.2
Quick Turnaround Limit Weight PD.22.3

Text PD.23.1

Introduction PD.23.1
Takeoff PD.23.1
Enroute PD.23.2
Landing PD.23.4

737-800 CFM56-7B26 KG FAA CATC

Takeoff. PD.30.1

Takeoff Field Corrections - Dry Runway. PD.30.1
Takeoff Field & Climb Limit Weights - Dry Runway PD.30.2

Copyright © The Boeing Company. See title page for details.

Takeoff Field Corrections - Wet Runway PD.30.4
Takeoff Field & Climb Limit Weights - Wet Runway. PD.30.5
Takeoff Obstacle Limit Weight PD.30.7

Enroute PD.31.1

Long Range Cruise Maximum Operating Altitude PD.31.1
Long Range Cruise Trip Fuel and Time PD.31.2
Long Range Cruise Step Climb PD.31.4
Short Trip Fuel and Time PD.31.5
Holding Planning. PD.31.5
Crew Oxygen Requirements PD.31.6
Net Level Off Weight PD.31.7
Long Range Cruise Critical Fuel Reserves PD.31.8

Landing. PD.32.1

Landing Field Limit Weight PD.32.1
Landing Climb Limit Weight. PD.32.2
Quick Turnaround Limit Weight PD.32.3

Text PD.33.1

Introduction PD.33.1
Takeoff. PD.33.1
Enroute. PD.33.2
Landing PD.33.4

737-900 CFM56-7B26 LB FAA CATG

Takeoff PD.40.1

Takeoff Field Corrections - Dry Runway PD.40.1
Takeoff Field & Climb Limit Weights - Dry Runway. PD.40.2
Takeoff Field Corrections - Wet Runway PD.40.5
Takeoff Field & Climb Limit Weights - Wet Runway. PD.40.6
Takeoff Obstacle Limit Weight PD.40.9
Tire Speed Limit Weight PD.40.11
Brake Energy Limits VMBE PD.40.12

Copyright © The Boeing Company. See title page for details.

Enroute PD.41.1

Long Range Cruise Maximum Operating Altitude PD.41.1
Long Range Cruise Trip Fuel and Time PD.41.2
Long Range Cruise Step Climb PD.41.4
Short Trip Fuel and Time PD.41.5
Holding Planning PD.41.6
Crew Oxygen Requirements PD.41.6
Net Level Off Weight PD.41.7
Long Range Cruise Critical Fuel Reserves PD.41.8

Landing PD.42.1

Landing Field Limit Weight PD.42.1
Landing Climb Limit Weight PD.42.2
Quick Turnaround Limit Weight PD.42.3

Text PD.43.1

Introduction PD.43.1
Takeoff PD.43.1
Enroute PD.43.2
Landing PD.43.4

Copyright © The Boeing Company. See title page for details.

Takeoff Field Corrections - Dry Runway

Slope Corrections

FIELD LENGTH AVAILABLE (M)	SLOPE CORRECTED FIELD LENGTH (M)								
	RUNWAY SLOPE (%)								
	-2.0	-1.5	-1.0	-0.5	0.0	0.5	1.0	1.5	2.0
1200	1270	1250	1230	1220	1200	1170	1150	1120	1100
1400	1490	1470	1440	1420	1400	1360	1320	1280	1240
1600	1710	1680	1660	1630	1600	1550	1490	1440	1390
1800	1940	1900	1870	1830	1800	1730	1670	1600	1530
2000	2160	2120	2080	2040	2000	1920	1840	1760	1680
2200	2380	2340	2290	2250	2200	2110	2010	1920	1820
2400	2610	2560	2500	2450	2400	2290	2180	2080	1970
2600	2830	2770	2720	2660	2600	2480	2360	2240	2120
2800	3050	2990	2930	2860	2800	2670	2530	2400	2260
3000	3280	3210	3140	3070	3000	2850	2700	2550	2410
3200	3500	3430	3350	3280	3200	3040	2880	2710	2550
3400	3720	3640	3560	3480	3400	3220	3050	2870	2700
3600	3950	3860	3770	3690	3600	3410	3220	3030	2840
3800	4170	4080	3990	3890	3800	3600	3390	3190	2990
4000	4390	4300	4200	4100	4000	3780	3570	3350	3130
4200	4620	4510	4410	4300	4200	3970	3740	3510	3280
4400	4840	4730	4620	4510	4400	4160	3910	3670	3420
4600	5070	4950	4830	4720	4600	4340	4080	3830	3570
4800	5290	5170	5040	4920	4800	4530	4260	3990	3710
5000	5510	5380	5260	5130	5000	4710	4430	4140	3860

Wind Corrections

SLOPE CORR'D FIELD LENGTH (M)	SLOPE & WIND CORRECTED FIELD LENGTH (M)							
	WIND COMPONENT (KTS)							
	-15	-10	-5	0	10	20	30	40
1200	850	970	1080	1200	1270	1350	1420	1500
1400	1030	1150	1280	1400	1480	1560	1640	1720
1600	1210	1340	1470	1600	1680	1760	1850	1940
1800	1380	1520	1660	1800	1880	1970	2060	2160
2000	1560	1710	1850	2000	2090	2180	2280	2380
2200	1740	1890	2050	2200	2290	2380	2490	2610
2400	1910	2080	2240	2400	2490	2590	2700	2830
2600	2090	2260	2430	2600	2690	2800	2920	3050
2800	2270	2450	2620	2800	2900	3010	3130	3270
3000	2450	2630	2820	3000	3100	3210	3350	3490
3200	2620	2820	3010	3200	3300	3420	3560	3720
3400	2800	3000	3200	3400	3500	3630	3770	3940
3600	2980	3180	3390	3600	3710	3840	3990	4160
3800	3150	3370	3580	3800	3910	4040	4200	4380
4000	3330	3550	3780	4000	4110	4250	4410	4600
4200	3510	3740	3970	4200	4320	4460	4630	4820
4400	3690	3920	4160	4400	4520	4670	4840	5050
4600	3860	4110	4350	4600	4720	4870	5060	5270
4800	4040	4290	4550	4800	4920	5080	5270	5490
5000	4220	4480	4740	5000	5130	5290	5480	5710

Copyright © The Boeing Company. See title page for details.

Takeoff Field & Climb Limit Weights - Dry Runway

Flaps 5

Sea Level Pressure Altitude

CORR'D FIELD LENGTH (M)	FIELD LIMIT WEIGHT (1000 KG)										
	OAT										
	°C	-40	14	18	22	24	26	28	30	42	46	50
	°F	-40	57	64	72	75	79	82	86	108	115	122
1220	58.1	53.4	53.0	52.7	52.5	52.3	52.2	52.0	47.9	46.7	45.4
1400	62.3	57.2	56.8	56.5	56.3	56.1	55.9	55.7	51.4	50.0	48.6
1600	66.5	61.1	60.7	60.3	60.1	59.9	59.7	59.5	54.8	53.4	51.9
1800	70.6	64.8	64.4	64.0	63.7	63.5	63.3	63.1	58.1	56.6	55.0
2000	72.5	68.7	68.2	67.8	67.6	67.4	67.1	66.9	61.6	60.0	58.4
2200	72.5	71.7	71.2	70.8	70.5	70.3	70.1	69.8	64.3	62.6	60.8
2400	72.5	72.5	72.5	72.5	72.5	72.5	72.5	72.5	66.7	64.9	63.0
2600	72.5	72.5	72.5	72.5	72.5	72.5	72.5	72.5	69.3	67.4	65.4
2800	72.5	72.5	72.5	72.5	72.5	72.5	72.5	72.5	71.6	69.7	67.6
3000	72.5	72.5	72.5	72.5	72.5	72.5	72.5	72.5	72.5	71.6	69.5
3200	72.5	72.5	72.5	72.5	72.5	72.5	72.5	72.5	72.5	72.5	71.4
3400	72.5	72.5	72.5	72.5	72.5	72.5	72.5	72.5	72.5	72.5	72.5
3600	72.5	72.5	72.5	72.5	72.5	72.5	72.5	72.5	72.5	72.5	72.5
3800	72.5	72.5	72.5	72.5	72.5	72.5	72.5	72.5	72.5	72.5	72.5
4000	72.5	72.5	72.5	72.5	72.5	72.5	72.5	72.5	72.5	72.5	72.5
4200	72.5	72.5	72.5	72.5	72.5	72.5	72.5	72.5	72.5	72.5	72.5
4400	72.5	72.5	72.5	72.5	72.5	72.5	72.5	72.5	72.5	72.5	72.5
4600	72.5	72.5	72.5	72.5	72.5	72.5	72.5	72.5	72.5	72.5	72.5
CLIMB LIMIT WT (1000 KG)	68.8	68.2	68.1	68.1	68.0	67.9	67.9	67.8	60.4	58.1	55.8

1000 FT Pressure Altitude

CORR'D FIELD LENGTH (M)	FIELD LIMIT WEIGHT (1000 KG)										
	OAT										
	°C	-40	14	18	22	24	26	28	30	42	46	50
	°F	-40	57	64	72	75	79	82	86	108	115	122
1220	56.8	52.0	51.7	51.3	51.2	51.0	50.7	50.0	46.3	45.1	43.8
1400	60.9	55.8	55.4	55.0	54.9	54.6	54.3	53.6	49.7	48.4	47.0
1600	65.0	59.6	59.2	58.8	58.6	58.3	58.0	57.2	53.0	51.6	50.2
1800	69.0	63.2	62.8	62.3	62.1	61.9	61.5	60.7	56.2	54.7	53.2
2000	72.5	67.0	66.5	66.1	65.9	65.6	65.2	64.4	59.6	58.0	56.4
2200	72.5	69.9	69.4	69.0	68.7	68.4	68.0	67.2	62.1	60.4	58.7
2400	72.5	72.5	72.1	71.6	71.4	71.1	70.7	69.7	64.4	62.7	60.9
2600	72.5	72.5	72.5	72.5	72.5	72.5	72.5	72.5	66.9	65.1	63.2
2800	72.5	72.5	72.5	72.5	72.5	72.5	72.5	72.5	69.1	67.2	65.2
3000	72.5	72.5	72.5	72.5	72.5	72.5	72.5	72.5	71.1	69.1	67.1
3200	72.5	72.5	72.5	72.5	72.5	72.5	72.5	72.5	72.5	71.0	68.9
3400	72.5	72.5	72.5	72.5	72.5	72.5	72.5	72.5	72.5	72.5	70.6
3600	72.5	72.5	72.5	72.5	72.5	72.5	72.5	72.5	72.5	72.5	72.3
3800	72.5	72.5	72.5	72.5	72.5	72.5	72.5	72.5	72.5	72.5	72.5
4000	72.5	72.5	72.5	72.5	72.5	72.5	72.5	72.5	72.5	72.5	72.5
4200	72.5	72.5	72.5	72.5	72.5	72.5	72.5	72.5	72.5	72.5	72.5
4400	72.5	72.5	72.5	72.5	72.5	72.5	72.5	72.5	72.5	72.5	72.5
4600	72.5	72.5	72.5	72.5	72.5	72.5	72.5	72.5	72.5	72.5	72.5
CLIMB LIMIT WT (1000 KG)	67.7	67.2	67.1	67.0	66.9	66.9	66.8	65.6	58.5	56.2	54.0

Copyright © The Boeing Company. See title page for details.

Takeoff Field & Climb Limit Weights - Dry Runway

Flaps 5

2000 FT Pressure Altitude

CORR'D FIELD LENGTH (M)	FIELD LIMIT WEIGHT (1000 KG)										
	OAT										
	°C -40	14	18	22	24	26	28	30	42	46	50
	°F -40	57	64	72	75	79	82	86	108	115	122
1220	55.5	50.5	50.1	49.8	49.6	49.5	48.9	48.3	44.8	43.6	42.3
1400	59.4	54.1	53.8	53.4	53.2	53.0	52.4	51.8	48.0	46.7	45.4
1600	63.5	57.8	57.4	57.0	56.8	56.6	56.0	55.3	51.2	49.8	48.4
1800	67.4	61.3	60.9	60.5	60.3	60.1	59.4	58.7	54.3	52.8	51.3
2000	71.4	65.0	64.5	64.1	63.9	63.7	62.9	62.2	57.6	56.0	54.5
2200	72.5	67.8	67.3	66.9	66.6	66.4	65.6	64.8	60.0	58.3	56.7
2400	72.5	70.4	69.9	69.4	69.2	69.0	68.1	67.3	62.2	60.4	58.7
2600	72.5	72.5	72.5	72.2	71.9	71.7	70.8	69.9	64.6	62.7	60.9
2800	72.5	72.5	72.5	72.5	72.5	72.5	72.5	72.3	66.7	64.8	62.9
3000	72.5	72.5	72.5	72.5	72.5	72.5	72.5	72.5	68.6	66.6	64.6
3200	72.5	72.5	72.5	72.5	72.5	72.5	72.5	72.5	70.4	68.4	66.4
3400	72.5	72.5	72.5	72.5	72.5	72.5	72.5	72.5	72.2	70.1	68.1
3600	72.5	72.5	72.5	72.5	72.5	72.5	72.5	72.5	72.5	71.8	69.7
3800	72.5	72.5	72.5	72.5	72.5	72.5	72.5	72.5	72.5	72.5	71.3
4000	72.5	72.5	72.5	72.5	72.5	72.5	72.5	72.5	72.5	72.5	72.5
4200	72.5	72.5	72.5	72.5	72.5	72.5	72.5	72.5	72.5	72.5	72.5
4400	72.5	72.5	72.5	72.5	72.5	72.5	72.5	72.5	72.5	72.5	72.5
4600	72.5	72.5	72.5	72.5	72.5	72.5	72.5	72.5	72.5	72.5	72.5
CLIMB LIMIT WT (1000 KG)	66.6	66.0	65.9	65.8	65.8	65.7	64.7	63.6	56.5	54.3	52.2

3000 FT Pressure Altitude

CORR'D FIELD LENGTH (M)	FIELD LIMIT WEIGHT (1000 KG)										
	OAT										
	°C -40	14	18	22	24	26	28	30	42	46	50
	°F -40	57	64	72	75	79	82	86	108	115	122
1220	54.2	49.2	48.9	48.6	48.4	47.8	47.3	46.7	43.2	42.1	40.9
1400	58.1	52.7	52.4	52.1	51.9	51.3	50.7	50.1	46.4	45.1	43.9
1600	62.0	56.3	55.9	55.6	55.4	54.7	54.1	53.4	49.5	48.1	46.8
1800	65.8	59.7	59.3	58.9	58.8	58.1	57.3	56.6	52.4	51.0	49.6
2000	69.7	63.3	62.9	62.5	62.3	61.6	60.8	60.1	55.6	54.1	52.6
2200	72.5	66.0	65.6	65.2	65.0	64.2	63.4	62.6	57.9	56.3	54.8
2400	72.5	68.5	68.1	67.6	67.4	66.6	65.8	64.9	60.0	58.3	56.7
2600	72.5	71.2	70.8	70.3	70.1	69.2	68.3	67.4	62.3	60.5	58.8
2800	72.5	72.5	72.5	72.5	72.4	71.5	70.6	69.7	64.3	62.4	60.7
3000	72.5	72.5	72.5	72.5	72.5	72.5	72.5	71.7	66.1	64.2	62.4
3200	72.5	72.5	72.5	72.5	72.5	72.5	72.5	72.5	67.9	65.9	64.0
3400	72.5	72.5	72.5	72.5	72.5	72.5	72.5	72.5	69.6	67.6	65.7
3600	72.5	72.5	72.5	72.5	72.5	72.5	72.5	72.5	71.3	69.2	67.3
3800	72.5	72.5	72.5	72.5	72.5	72.5	72.5	72.5	72.5	70.8	68.8
4000	72.5	72.5	72.5	72.5	72.5	72.5	72.5	72.5	72.5	72.4	70.3
4200	72.5	72.5	72.5	72.5	72.5	72.5	72.5	72.5	72.5	72.5	71.8
4400	72.5	72.5	72.5	72.5	72.5	72.5	72.5	72.5	72.5	72.5	72.5
4600	72.5	72.5	72.5	72.5	72.5	72.5	72.5	72.5	72.5	72.5	72.5
CLIMB LIMIT WT (1000 KG)	65.6	65.1	65.0	64.9	64.9	63.7	62.6	61.4	54.6	52.4	50.4

Copyright © The Boeing Company. See title page for details.

Takeoff Field Corrections - Wet Runway

Slope Corrections

FIELD LENGTH AVAILABLE (M)	SLOPE CORRECTED FIELD LENGTH (M)								
	RUNWAY SLOPE (%)								
	-2.0	-1.5	-1.0	-0.5	0.0	0.5	1.0	1.5	2.0
1200	1240	1230	1220	1210	1200	1180	1170	1150	1130
1400	1470	1450	1430	1420	1400	1370	1340	1310	1290
1600	1700	1670	1650	1620	1600	1560	1520	1480	1440
1800	1930	1900	1860	1830	1800	1750	1700	1650	1600
2000	2160	2120	2080	2040	2000	1940	1880	1810	1750
2200	2390	2340	2290	2250	2200	2130	2050	1980	1900
2400	2620	2560	2510	2450	2400	2310	2230	2140	2060
2600	2850	2790	2720	2660	2600	2500	2410	2310	2210
2800	3080	3010	2940	2870	2800	2690	2580	2480	2370
3000	3310	3230	3160	3080	3000	2880	2760	2640	2520
3200	3540	3460	3370	3290	3200	3070	2940	2810	2680
3400	3770	3680	3590	3490	3400	3260	3120	2970	2830
3600	4000	3900	3800	3700	3600	3450	3290	3140	2990
3800	4230	4120	4020	3910	3800	3640	3470	3310	3140
4000	4460	4350	4230	4120	4000	3820	3650	3470	3300
4200	4690	4570	4450	4320	4200	4010	3830	3640	3450
4400	4920	4790	4660	4530	4400	4200	4000	3800	3600
4600	5150	5020	4880	4740	4600	4390	4180	3970	3760
4800	5380	5240	5090	4950	4800	4580	4360	4140	3910
5000	5620	5460	5310	5150	5000	4770	4530	4300	4070

Wind Corrections

SLOPE CORR'D FIELD LENGTH (M)	SLOPE & WIND CORRECTED FIELD LENGTH (M)							
	WIND COMPONENT (KTS)							
	-15	-10	-5	0	10	20	30	40
1200	830	960	1080	1200	1280	1370	1450	1550
1400	1000	1130	1270	1400	1490	1580	1680	1770
1600	1170	1310	1460	1600	1690	1790	1900	2000
1800	1340	1490	1650	1800	1900	2010	2120	2230
2000	1510	1670	1840	2000	2110	2220	2340	2460
2200	1680	1850	2030	2200	2310	2430	2560	2690
2400	1850	2030	2220	2400	2520	2640	2780	2920
2600	2020	2210	2410	2600	2720	2860	3000	3140
2800	2190	2390	2600	2800	2930	3070	3220	3370
3000	2360	2570	2790	3000	3140	3280	3440	3600
3200	2520	2750	2970	3200	3340	3490	3660	3830
3400	2690	2930	3160	3400	3550	3710	3880	4060
3600	2860	3110	3350	3600	3750	3920	4100	4290
3800	3030	3290	3540	3800	3960	4130	4320	4520
4000	3200	3470	3730	4000	4170	4350	4540	4740
4200	3370	3650	3920	4200	4370	4560	4760	4970
4400	3540	3830	4110	4400	4580	4770	4980	5200
4600	3710	4010	4300	4600	4780	4980	5200	5430
4800	3880	4190	4490	4800	4990	5200	5420	5660
5000	4050	4360	4680	5000	5200	5410	5640	5890

Copyright © The Boeing Company. See title page for details.

Takeoff Field & Climb Limit Weights - Wet Runway

Flaps 5

Sea Level Pressure Altitude

CORR'D FIELD LENGTH (M)	FIELD LIMIT WEIGHT (1000 KG)										
	OAT										
	°C -40	14	18	22	24	26	28	30	42	46	50
	°F -40	57	64	72	75	79	82	86	108	115	122
1450	63.3	57.7	57.3	56.9	56.7	56.5	56.3	56.1	51.7	50.3	49.0
1600	66.4	60.5	60.1	59.7	59.5	59.3	59.1	58.9	54.1	52.8	51.3
1800	70.4	64.0	63.6	63.2	63.0	62.7	62.5	62.3	57.3	55.9	54.4
2000	72.5	67.8	67.3	66.8	66.6	66.4	66.2	65.9	60.7	59.1	57.5
2200	72.5	70.7	70.2	69.7	69.5	69.3	69.0	68.8	63.2	61.6	60.0
2400	72.5	72.5	72.5	72.5	72.3	72.0	71.8	71.5	65.7	64.0	62.3
2600	72.5	72.5	72.5	72.5	72.5	72.5	72.5	72.5	68.3	66.6	64.7
2800	72.5	72.5	72.5	72.5	72.5	72.5	72.5	72.5	70.7	68.9	67.0
3000	72.5	72.5	72.5	72.5	72.5	72.5	72.5	72.5	72.5	71.0	69.1
3200	72.5	72.5	72.5	72.5	72.5	72.5	72.5	72.5	72.5	72.5	71.1
3400	72.5	72.5	72.5	72.5	72.5	72.5	72.5	72.5	72.5	72.5	72.5
3600	72.5	72.5	72.5	72.5	72.5	72.5	72.5	72.5	72.5	72.5	72.5
3800	72.5	72.5	72.5	72.5	72.5	72.5	72.5	72.5	72.5	72.5	72.5
4000	72.5	72.5	72.5	72.5	72.5	72.5	72.5	72.5	72.5	72.5	72.5
4200	72.5	72.5	72.5	72.5	72.5	72.5	72.5	72.5	72.5	72.5	72.5
4400	72.5	72.5	72.5	72.5	72.5	72.5	72.5	72.5	72.5	72.5	72.5
4600	72.5	72.5	72.5	72.5	72.5	72.5	72.5	72.5	72.5	72.5	72.5
4800	72.5	72.5	72.5	72.5	72.5	72.5	72.5	72.5	72.5	72.5	72.5
CLIMB LIMIT WT (1000 KG)	68.8	68.2	68.1	68.1	68.0	67.9	67.9	67.8	60.4	58.1	55.8

1000 FT Pressure Altitude

CORR'D FIELD LENGTH (M)	FIELD LIMIT WEIGHT (1000 KG)										
	OAT										
	°C -40	14	18	22	24	26	28	30	42	46	50
	°F -40	57	64	72	75	79	82	86	108	115	122
1450	61.8	56.2	55.7	55.2	55.0	54.8	54.6	53.9	49.9	48.6	47.4
1600	64.8	58.9	58.3	57.9	57.7	57.5	57.2	56.5	52.3	51.0	49.6
1800	68.6	62.4	61.8	61.3	61.1	60.8	60.6	59.9	55.4	53.9	52.5
2000	72.5	66.0	65.4	64.8	64.6	64.4	64.2	63.3	58.6	57.1	55.6
2200	72.5	68.9	68.2	67.6	67.4	67.2	66.9	66.1	61.1	59.5	57.9
2400	72.5	71.6	70.9	70.3	70.1	69.8	69.6	68.7	63.4	61.8	60.1
2600	72.5	72.5	72.5	72.5	72.5	72.5	72.3	71.4	66.0	64.2	62.5
2800	72.5	72.5	72.5	72.5	72.5	72.5	72.5	72.5	68.3	66.5	64.7
3000	72.5	72.5	72.5	72.5	72.5	72.5	72.5	72.5	70.4	68.6	66.7
3200	72.5	72.5	72.5	72.5	72.5	72.5	72.5	72.5	72.5	70.5	68.6
3400	72.5	72.5	72.5	72.5	72.5	72.5	72.5	72.5	72.5	72.5	70.5
3600	72.5	72.5	72.5	72.5	72.5	72.5	72.5	72.5	72.5	72.5	72.3
3800	72.5	72.5	72.5	72.5	72.5	72.5	72.5	72.5	72.5	72.5	72.5
4000	72.5	72.5	72.5	72.5	72.5	72.5	72.5	72.5	72.5	72.5	72.5
4200	72.5	72.5	72.5	72.5	72.5	72.5	72.5	72.5	72.5	72.5	72.5
4400	72.5	72.5	72.5	72.5	72.5	72.5	72.5	72.5	72.5	72.5	72.5
4600	72.5	72.5	72.5	72.5	72.5	72.5	72.5	72.5	72.5	72.5	72.5
4800	72.5	72.5	72.5	72.5	72.5	72.5	72.5	72.5	72.5	72.5	72.5
CLIMB LIMIT WT (1000 KG)	67.7	67.2	67.1	67.0	66.9	66.9	66.8	65.6	58.5	56.2	54.0

Copyright © The Boeing Company. See title page for details.

Takeoff Field & Climb Limit Weights - Wet Runway

Flaps 5

2000 FT Pressure Altitude

CORR'D FIELD LENGTH (M)	FIELD LIMIT WEIGHT (1000 KG)										
	OAT										
	°C	-40	14	18	22	24	26	28	30	42	46	50
	°F	-40	57	64	72	75	79	82	86	108	115	122
1450	60.2	54.4	54.1	53.7	53.5	53.3	52.7	52.1	48.2	47.0	45.7
1600	63.1	57.1	56.7	56.3	56.1	55.9	55.3	54.6	50.5	49.2	47.9
1800	66.9	60.4	60.0	59.6	59.4	59.2	58.5	57.8	53.4	52.1	50.7
2000	70.8	63.9	63.5	63.1	62.9	62.7	61.9	61.2	56.6	55.1	53.7
2200	72.5	66.7	66.2	65.8	65.6	65.3	64.6	63.8	58.9	57.4	55.9
2400	72.5	69.3	68.8	68.4	68.1	67.9	67.1	66.3	61.2	59.6	58.0
2600	72.5	72.1	71.6	71.1	70.9	70.6	69.8	68.9	63.6	62.0	60.3
2800	72.5	72.5	72.5	72.5	72.5	72.5	72.2	71.3	65.8	64.1	62.4
3000	72.5	72.5	72.5	72.5	72.5	72.5	72.5	72.5	67.9	66.1	64.3
3200	72.5	72.5	72.5	72.5	72.5	72.5	72.5	72.5	69.9	68.1	66.2
3400	72.5	72.5	72.5	72.5	72.5	72.5	72.5	72.5	71.8	69.9	68.0
3600	72.5	72.5	72.5	72.5	72.5	72.5	72.5	72.5	72.5	71.7	69.7
3800	72.5	72.5	72.5	72.5	72.5	72.5	72.5	72.5	72.5	72.5	71.4
4000	72.5	72.5	72.5	72.5	72.5	72.5	72.5	72.5	72.5	72.5	72.5
4200	72.5	72.5	72.5	72.5	72.5	72.5	72.5	72.5	72.5	72.5	72.5
4400	72.5	72.5	72.5	72.5	72.5	72.5	72.5	72.5	72.5	72.5	72.5
4600	72.5	72.5	72.5	72.5	72.5	72.5	72.5	72.5	72.5	72.5	72.5
4800	72.5	72.5	72.5	72.5	72.5	72.5	72.5	72.5	72.5	72.5	72.5
CLIMB LIMIT WT (1000 KG)	66.6	66.0	65.9	65.8	65.8	65.7	64.7	63.6	56.5	54.3	52.2

3000 FT Pressure Altitude

CORR'D FIELD LENGTH (M)	FIELD LIMIT WEIGHT (1000 KG)										
	OAT										
	°C	-40	14	18	22	24	26	28	30	42	46	50
	°F	-40	57	64	72	75	79	82	86	108	115	122
1450	58.7	53.0	52.7	52.3	52.2	51.5	50.9	50.3	46.5	45.4	44.2
1600	61.5	55.6	55.2	54.8	54.7	54.0	53.3	52.7	48.7	47.5	46.3
1800	65.2	58.8	58.5	58.1	57.9	57.2	56.5	55.8	51.6	50.3	49.0
2000	69.0	62.3	61.9	61.5	61.3	60.5	59.8	59.0	54.6	53.2	51.9
2200	72.0	64.9	64.5	64.1	63.9	63.1	62.3	61.5	56.9	55.4	54.0
2400	72.5	67.5	67.0	66.6	66.4	65.5	64.7	63.9	59.1	57.5	56.0
2600	72.5	70.2	69.7	69.2	69.0	68.1	67.3	66.4	61.4	59.8	58.2
2800	72.5	72.5	72.2	71.7	71.4	70.5	69.6	68.8	63.5	61.9	60.3
3000	72.5	72.5	72.5	72.5	72.5	72.5	71.8	70.9	65.5	63.8	62.1
3200	72.5	72.5	72.5	72.5	72.5	72.5	72.5	72.5	67.4	65.6	63.9
3400	72.5	72.5	72.5	72.5	72.5	72.5	72.5	72.5	69.2	67.4	65.6
3600	72.5	72.5	72.5	72.5	72.5	72.5	72.5	72.5	71.0	69.1	67.3
3800	72.5	72.5	72.5	72.5	72.5	72.5	72.5	72.5	72.5	70.8	68.9
4000	72.5	72.5	72.5	72.5	72.5	72.5	72.5	72.5	72.5	72.4	70.5
4200	72.5	72.5	72.5	72.5	72.5	72.5	72.5	72.5	72.5	72.5	72.0
4400	72.5	72.5	72.5	72.5	72.5	72.5	72.5	72.5	72.5	72.5	72.5
4600	72.5	72.5	72.5	72.5	72.5	72.5	72.5	72.5	72.5	72.5	72.5
4800	72.5	72.5	72.5	72.5	72.5	72.5	72.5	72.5	72.5	72.5	72.5
CLIMB LIMIT WT (1000 KG)	65.6	65.1	65.0	64.9	64.9	63.7	62.6	61.4	54.6	52.4	50.4

Copyright © The Boeing Company. See title page for details.

Takeoff Obstacle Limit Weight

Flaps 5

Sea Level 30°C & Below, Zero Wind

Based on engine bleed for packs on and anti-ice off

Reference Obstacle Limit Weight (1000 KG)

OBSTACLE HEIGHT (M)	DISTANCE FROM BRAKE RELEASE (100 M)										
	25	30	35	40	45	50	55	60	65	70	75
5	67.8	70.8									
20	61.6	65.4	68.0	69.8	71.1						
40	56.6	60.3	63.2	65.5	67.2	68.5	69.6	70.5	71.2	71.8	
60	52.8	56.6	59.6	62.0	63.9	65.5	66.8	67.8	68.7	69.5	70.1
80	49.7	53.6	56.6	59.1	61.1	62.8	64.3	65.5	66.5	67.4	68.1
100	47.1	50.9	54.0	56.6	58.7	60.5	62.0	63.4	64.5	65.5	66.3
120	44.8	48.6	51.8	54.4	56.6	58.4	60.0	61.4	62.6	63.7	64.6
140	42.8	46.6	49.7	52.4	54.6	56.5	58.2	59.6	60.9	62.0	63.0
160	41.0	44.8	47.9	50.6	52.9	54.8	56.5	58.0	59.3	60.5	61.5
180	39.4	43.1	46.3	48.9	51.2	53.2	55.0	56.5	57.8	59.0	60.1
200		41.6	44.7	47.4	49.7	51.7	53.5	55.1	56.5	57.7	58.8
220		40.2	43.3	46.0	48.3	50.4	52.1	53.7	55.2	56.4	57.6
240		39.0	42.0	44.7	47.0	49.1	50.9	52.5	53.9	55.2	56.4
260			40.8	43.5	45.8	47.8	49.7	51.3	52.8	54.1	55.3
280			39.7	42.3	44.6	46.7	48.5	50.2	51.7	53.0	54.2
300				41.3	43.5	45.6	47.4	49.1	50.6	52.0	53.2

Obstacle height must be calculated from lowest point of the runway to conservatively account for runway slope. When using line-up allowances the obstacle distance from brake release must be reduced by the ASDA adjustment.

OAT Adjustments

OAT (°C)	REFERENCE OBSTACLE LIMIT WEIGHT (1000 KG)							
	40	44	48	52	56	60	64	68
30 & BELOW	0	0	0	0	0	0	0	0
32	-0.7	-0.8	-0.9	-0.9	-1.0	-1.1	-1.2	-1.3
34	-1.4	-1.6	-1.7	-1.9	-2.0	-2.2	-2.4	-2.5
36	-2.1	-2.4	-2.6	-2.8	-3.1	-3.3	-3.5	-3.8
38	-2.8	-3.2	-3.5	-3.8	-4.1	-4.4	-4.7	-5.0
40	-3.5	-3.9	-4.2	-4.6	-5.0	-5.4	-5.8	-6.2
42	-4.1	-4.6	-5.0	-5.5	-5.9	-6.4	-6.9	-7.3
44	-4.8	-5.3	-5.8	-6.3	-6.9	-7.4	-7.9	-8.5
46	-5.4	-6.0	-6.6	-7.2	-7.8	-8.4	-9.0	-9.6
48	-6.0	-6.7	-7.4	-8.0	-8.7	-9.4	-10.1	-10.7
50	-6.7	-7.4	-8.1	-8.9	-9.6	-10.4	-11.1	-11.9

Pressure Altitude Adjustments

ALT (FT)	OAT ADJUSTED OBSTACLE LIMIT WEIGHT (1000 KG)							
	40	44	48	52	56	60	64	68
S.L.& BELOW	0	0	0	0	0	0	0	0
1000	-1.5	-1.7	-1.8	-1.9	-2.0	-2.1	-2.3	-2.4
2000	-2.9	-3.2	-3.4	-3.6	-3.9	-4.1	-4.4	-4.6
3000	-4.3	-4.6	-5.0	-5.4	-5.7	-6.1	-6.4	-6.8

Copyright © The Boeing Company. See title page for details.

Takeoff Obstacle Limit Weight

Flaps 5

Sea Level 30°C & Below, Zero Wind

Based on engine bleed for packs on and anti-ice off

Wind Adjustments

WIND (KTS)	OAT & ALT ADJUSTED OBSTACLE LIMIT WEIGHT (1000 KG)							
	40	44	48	52	56	60	64	68
15 TW	-7.9	-7.6	-7.3	-7.1	-6.8	-6.5	-6.2	-5.9
10 TW	-5.3	-5.1	-4.9	-4.7	-4.5	-4.3	-4.1	-4.0
5 TW	-2.6	-2.5	-2.4	-2.4	-2.3	-2.2	-2.1	-2.0
0	0	0	0	0	0	0	0	0
10 HW	1.0	0.9	0.9	0.8	0.7	0.6	0.6	0.5
20 HW	2.0	1.9	1.7	1.6	1.4	1.3	1.2	1.0
30 HW	3.1	2.9	2.6	2.4	2.2	2.0	1.8	1.6
40 HW	4.2	3.9	3.6	3.3	3.0	2.7	2.4	2.1

With engine bleed for packs off, increase weight by 800 kg.
With engine anti-ice on, decrease weight by 150 kg.
With engine and wing anti-ice on, decrease weight by 700 kg.

Copyright © The Boeing Company. See title page for details.

Long Range Cruise Maximum Operating Altitude

Max Cruise Thrust

ISA + 10°C and Below

WEIGHT (1000 KG)	OPTIMUM ALT (FT)	TAT (°C)	MARGIN TO INITIAL BUFFET 'G' (BANK ANGLE)				
			1.20 (33°)	1.25 (36°)	1.30 (39°)	1.40 (44°)	1.50 (48°)
70	34500	-15	37700*	37700*	37700*	36400	35100
65	36000	-18	39200*	39200*	39200*	38000	36600
60	37700	-18	40700*	40700*	40700*	39700	38300
55	39500	-18	41000	41000	41000	41000	40100
50	41000	-18	41000	41000	41000	41000	41000
45	41000	-18	41000	41000	41000	41000	41000
40	41000	-18	41000	41000	41000	41000	41000
35	41000	-18	41000	41000	41000	41000	41000

ISA + 15°C

WEIGHT (1000 KG)	OPTIMUM ALT (FT)	TAT (°C)	MARGIN TO INITIAL BUFFET 'G' (BANK ANGLE)				
			1.20 (33°)	1.25 (36°)	1.30 (39°)	1.40 (44°)	1.50 (48°)
70	34500	-9	37000*	37000*	37000*	36400	35100
65	36000	-13	38300*	38300*	38300*	38000	36600
60	37700	-13	39800*	39800*	39800*	39700	38300
55	39500	-13	41000	41000	41000	41000	40100
50	41000	-13	41000	41000	41000	41000	41000
45	41000	-13	41000	41000	41000	41000	41000
40	41000	-13	41000	41000	41000	41000	41000
35	41000	-13	41000	41000	41000	41000	41000

ISA + 20°C

WEIGHT (1000 KG)	OPTIMUM ALT (FT)	TAT (°C)	MARGIN TO INITIAL BUFFET 'G' (BANK ANGLE)				
			1.20 (33°)	1.25 (36°)	1.30 (39°)	1.40 (44°)	1.50 (48°)
70	34500	-4	35700*	35700*	35700*	35700*	35100
65	36000	-7	37200*	37200*	37200*	37200*	36600
60	37700	-7	38700*	38700*	38700*	38700*	38300
55	39500	-7	40200*	40200*	40200*	40200*	40100
50	41000	-7	41000	41000	41000	41000	41000
45	41000	-7	41000	41000	41000	41000	41000
40	41000	-7	41000	41000	41000	41000	41000
35	41000	-7	41000	41000	41000	41000	41000

***Denotes altitude thrust limited in level flight, 100 fpm residual rate of climb.**

Copyright © The Boeing Company. See title page for details.

Long Range Cruise Trip Fuel and Time

Ground to Air Miles Conversion

AIR DISTANCE (NM)					GROUND DISTANCE (NM)	AIR DISTANCE (NM)				
HEADWIND COMPONENT (KTS)						TAILWIND COMPONENT (KTS)				
100	80	60	40	20		20	40	60	80	100
278	258	240	225	212	200	190	181	173	166	159
551	513	479	450	424	400	381	364	349	334	322
823	767	717	673	635	600	573	548	524	504	485
1095	1021	955	897	846	800	764	731	700	673	648
1366	1274	1192	1120	1057	1000	955	914	877	842	811
1636	1527	1429	1344	1268	1200	1147	1098	1053	1011	974
1906	1780	1666	1567	1480	1400	1338	1281	1229	1181	1137
2175	2032	1903	1790	1691	1600	1530	1465	1405	1350	1300
2443	2283	2139	2013	1901	1800	1721	1648	1581	1520	1464
2711	2535	2375	2236	2112	2000	1913	1832	1757	1689	1627
2978	2785	2611	2458	2323	2200	2104	2016	1934	1859	1791
3245	3035	2846	2681	2534	2400	2296	2199	2110	2028	1954
3511	3285	3081	2903	2744	2600	2488	2383	2287	2198	2118
3776	3534	3316	3125	2955	2800	2679	2567	2463	2368	2281
4041	3783	3550	3346	3165	3000	2871	2751	2640	2538	2445
4305	4032	3784	3568	3375	3200	3062	2935	2816	2708	2609
4569	4280	4018	3789	3586	3400	3254	3119	2993	2878	2773
4831	4527	4252	4011	3796	3600	3446	3302	3170	3048	2936
5093	4774	4485	4232	4006	3800	3637	3486	3346	3218	3100
5355	5021	4718	4453	4216	4000	3829	3670	3523	3388	3264
5616	5267	4951	4674	4426	4200	4021	3854	3699	3557	3428
5876	5513	5184	4894	4636	4400	4212	4038	3876	3727	3592
6136	5758	5416	5114	4846	4600	4404	4221	4052	3897	3755
6395	6003	5648	5335	5055	4800	4595	4405	4229	4067	3919
6653	6247	5879	5555	5265	5000	4787	4589	4405	4237	4083

Copyright © The Boeing Company. See title page for details.

Long Range Cruise Trip Fuel and Time

Reference Fuel and Time Required

AIR DIST (NM)	PRESSURE ALTITUDE (1000 FT)									
	29		31		33		35		37	
	FUEL (1000 KG)	TIME (HR:MIN)	FUEL (1000 KG)	TIME (HR:MIN)	FUEL (1000 KG)	TIME (HR:MIN)	FUEL (1000 KG)	TIME (HR:MIN)	FUEL (1000 KG)	TIME (HR:MIN)
200	1.4	0:38	1.4	0:37	1.4	0:37	1.4	0:36	1.4	0:36
400	2.4	1:08	2.4	1:07	2.4	1:06	2.3	1:05	2.3	1:04
600	3.4	1:39	3.4	1:37	3.3	1:34	3.3	1:33	3.2	1:31
800	4.5	2:09	4.4	2:06	4.3	2:03	4.2	2:00	4.1	1:59
1000	5.5	2:39	5.4	2:36	5.2	2:31	5.1	2:28	5.0	2:26
1200	6.5	3:09	6.4	3:04	6.2	2:59	6.1	2:56	6.0	2:53
1400	7.6	3:38	7.4	3:33	7.2	3:27	7.1	3:23	6.9	3:20
1600	8.7	4:07	8.4	4:01	8.2	3:55	8.0	3:50	7.8	3:47
1800	9.7	4:37	9.5	4:30	9.2	4:23	9.0	4:18	8.8	4:14
2000	10.8	5:06	10.5	4:58	10.2	4:51	9.9	4:45	9.7	4:41
2200	11.9	5:34	11.6	5:26	11.3	5:18	11.0	5:12	10.7	5:08
2400	13.0	6:03	12.7	5:53	12.3	5:45	12.0	5:39	11.7	5:34
2600	14.1	6:31	13.7	6:21	13.4	6:12	13.0	6:06	12.7	6:01
2800	15.3	6:59	14.8	6:49	14.4	6:39	14.0	6:33	13.7	6:28
3000	16.4	7:28	15.9	7:16	15.5	7:06	15.0	7:00	14.7	6:55
3200	17.5	7:55	17.0	7:43	16.6	7:33	16.1	7:26	15.8	7:21
3400	18.7	8:22	18.2	8:10	17.7	8:00	17.2	7:53	16.9	7:48
3600	19.9	8:50	19.3	8:37	18.8	8:27	18.2	8:20	18.0	8:14
3800	21.1	9:17	20.5	9:04	19.9	8:53	19.3	8:46	19.1	8:41
4000	22.2	9:44	21.6	9:31	21.0	9:20	20.4	9:13	20.1	9:07
4200	23.5	10:11	22.8	9:58	22.1	9:47	21.6	9:39	21.3	9:34
4400	24.7	10:38	24.0	10:24	23.3	10:13	22.7	10:06	22.5	10:00
4600	25.9	11:05	25.2	10:51	24.4	10:39	23.9	10:32	23.7	10:27
4800	27.2	11:31	26.4	11:17	25.6	11:06	25.0	10:59	24.9	10:53
5000	28.4	11:58	27.6	11:44	26.8	11:32	26.2	11:25	26.1	11:20

Fuel Required Adjustments (1000 KG)

REFERENCE FUEL REQUIRED (1000 KG)	LANDING WEIGHT (1000 KG)			
	30	40	50	60
5	-0.8	-0.4	0.0	0.7
10	-1.7	-0.9	0.0	1.5
15	-2.5	-1.3	0.0	2.5
20	-3.4	-1.8	0.0	3.7
25	-4.3	-2.3	0.0	5.1
30	-5.2	-2.7	0.0	6.6

Based on 280/.78 climb, Long Range Cruise and .78/280/250 descent.

Copyright © The Boeing Company. See title page for details.

Long Range Cruise Step Climb

Ground to Air Miles Conversion

AIR DISTANCE (NM)					GROUND DISTANCE (NM)	AIR DISTANCE (NM)				
HEADWIND COMPONENT (KTS)						TAILWIND COMPONENT (KTS)				
100	80	60	40	20		20	40	60	80	100
1325	1244	1173	1109	1052	1000	953	911	872	836	803
1843	1733	1636	1549	1471	1400	1336	1277	1224	1174	1129
2360	2222	2099	1989	1890	1800	1718	1644	1576	1513	1455
2876	2710	2561	2428	2309	2200	2101	2011	1928	1852	1781
3392	3197	3023	2868	2727	2600	2484	2378	2281	2191	2108
3907	3684	3485	3307	3146	3000	2867	2745	2633	2530	2435
4421	4170	3947	3746	3565	3400	3250	3113	2986	2870	2762
4934	4656	4408	4185	3983	3800	3633	3480	3339	3210	3090
5448	5142	4869	4624	4402	4200	4016	3847	3693	3550	3417
5961	5628	5330	5062	4820	4600	4399	4215	4046	3890	3745
6474	6113	5791	5501	5238	5000	4782	4583	4399	4230	4073

Trip Fuel and Time Required

AIR DIST (NM)	TRIP FUEL (1000 KG)				TIME (HR:MIN)
	LANDING WEIGHT (1000 KG)				
	30	40	50	60	
1000	3.7	4.3	5.0	5.7	2:27
1400	5.1	5.9	6.8	7.9	3:22
1800	6.5	7.5	8.7	10.1	4:16
2200	7.8	9.1	10.7	12.3	5:10
2600	9.3	10.8	12.6	14.7	6:04
3000	10.7	12.5	14.7	17.1	6:58
3400	12.2	14.2	16.8	19.5	7:51
3800	13.7	16.0	19.0	22.1	8:44
4200	15.3	17.9	21.2	24.7	9:37
4600	16.9	19.8	23.5	27.4	10:30
5000	18.5	21.8	25.9	30.1	11:23

Based on 280/.78 climb, Long Range Cruise or .79 cruise and .78/280/250 descent.
Valid for all pressure altitudes with 4000 ft step climb to 2000 ft above optimum altitude.

Copyright © The Boeing Company. See title page for details.

Short Trip Fuel and Time

Ground to Air Miles Conversion

AIR DISTANCE (NM) HEADWIND COMPONENT (KTS)					GROUND DISTANCE (NM)	AIR DISTANCE (NM) TAILWIND COMPONENT (KTS)				
100	80	60	40	20		20	40	60	80	100
92	79	69	61	55	50	46	42	39	37	34
157	141	128	117	108	100	93	87	82	77	73
222	203	186	172	160	150	141	133	125	119	113
287	264	244	228	213	200	189	178	169	161	153
351	325	302	283	265	250	236	224	213	203	194
415	385	360	337	318	300	284	270	257	246	235
478	446	417	392	370	350	332	316	301	288	276
542	506	475	447	422	400	380	362	346	331	317
607	568	533	502	475	450	428	408	389	373	357
673	629	591	557	527	500	476	453	433	415	398

Trip Fuel and Time Required

AIR DIST (NM)		LANDING WEIGHT (1000 KG)							TIME (HRS:MIN)
		30	35	40	45	50	55	60	
50	FUEL (1000 KG)	0.5	0.5	0.5	0.5	0.6	0.6	0.7	0:14
	ALT (FT)	17000	15000	9000	7000	5000	5000	5000	
100	FUEL (1000 KG)	0.7	0.8	0.8	0.9	0.9	0.9	1.0	0:22
	ALT (FT)	25000	23000	21000	19000	15000	13000	11000	
150	FUEL (1000 KG)	0.9	1.0	1.1	1.1	1.2	1.2	1.3	0:30
	ALT (FT)	31000	29000	27000	25000	23000	21000	19000	
200	FUEL (1000 KG)	1.1	1.2	1.3	1.4	1.4	1.5	1.6	0:37
	ALT (FT)	39000	37000	35000	31000	29000	27000	25000	
250	FUEL (1000 KG)	1.3	1.4	1.5	1.6	1.7	1.8	1.9	0:43
	ALT (FT)	41000	41000	41000	37000	35000	33000	31000	
300	FUEL (1000 KG)	1.4	1.6	1.7	1.8	1.9	2.0	2.1	0:50
	ALT (FT)	41000	41000	41000	41000	37000	35000	33000	
350	FUEL (1000 KG)	1.6	1.7	1.9	2.0	2.1	2.2	2.4	0:57
	ALT (FT)	41000	41000	41000	41000	37000	35000	33000	
400	FUEL (1000 KG)	1.8	1.9	2.0	2.2	2.3	2.5	2.6	1:03
	ALT (FT)	41000	41000	41000	41000	37000	35000	33000	
450	FUEL (1000 KG)	1.9	2.1	2.2	2.4	2.5	2.7	2.9	1:10
	ALT (FT)	41000	41000	41000	39000	37000	35000	33000	
500	FUEL (1000 KG)	2.1	2.2	2.4	2.6	2.8	2.9	3.1	1:18
	ALT (FT)	41000	41000	41000	39000	37000	35000	33000	

Based on 280/.78 climb, Long Range Cruise and .78/280/250 descent.

Holding Planning

Flaps Up

WEIGHT (1000 KG)	TOTAL FUEL FLOW (KG/HR) PRESSURE ALTITUDE (FT)								
	1500	5000	10000	15000	20000	25000	30000	35000	41000
70	2490	2450	2420	2400	2360	2330	2390	2470	
65	2330	2290	2260	2230	2200	2150	2210	2260	
60	2180	2130	2100	2070	2040	1980	2020	2060	2330
55	2020	1970	1940	1910	1870	1830	1840	1880	2030
50	1870	1820	1780	1750	1710	1680	1690	1710	1810
45	1720	1660	1650	1610	1580	1550	1530	1530	1610
40	1600	1550	1490	1450	1420	1400	1380	1360	1420
35	1450	1400	1350	1310	1280	1250	1230	1210	1240

This table includes 5% additional fuel for holding in a racetrack pattern.

Copyright © The Boeing Company. See title page for details.

Crew Oxygen Requirements

Required Pressure (PSI) for 76 Cu. Ft. Cylinder

BOTTLE TEMPERATURE		NUMBER OF CREW USING OXYGEN		
°C	°F	2	3	4
50	122	735	1055	1360
45	113	725	1040	1340
40	104	715	1020	1320
35	92	700	1005	1300
30	86	690	990	1280
25	77	680	975	1255
20	68	670	960	1240
15	59	655	940	1215
10	50	645	925	1195
5	41	635	910	1175
0	32	620	890	1150
-5	23	610	875	1130
-10	14	600	860	1110

Required Pressure (PSI) for 114/115 Cu. Ft. Cylinder

BOTTLE TEMPERATURE		NUMBER OF CREW USING OXYGEN		
°C	°F	2	3	4
50	122	530	735	945
45	113	520	725	930
40	104	510	715	915
35	92	505	700	900
30	86	495	690	885
25	77	485	680	870
20	68	480	670	860
15	59	470	655	840
10	50	460	645	830
5	41	455	635	815
0	32	445	620	800
-5	23	440	610	785
-10	14	430	600	770

Copyright © The Boeing Company. See title page for details.

ENGINE INOP

MAX CONTINUOUS THRUST

Net Level Off Weight

PRESSURE ALTITUDE (1000 FT)	LEVEL OFF WEIGHT (1000 KG)		
	ISA + 10°C & BELOW	ISA + 15°C	ISA + 20°C
32	39.7		
30	43.4	42.2	40.8
28	47.3	45.9	44.4
26	51.4	49.8	48.2
24	55.1	53.3	51.6
22	58.4	56.4	54.5
20	61.8	59.6	57.1
18	65.3	62.8	59.9
16	68.6	65.8	62.4
14	72.5	69.0	65.4
12	72.5	72.0	68.5
10	72.5	72.5	71.6
8	72.5	72.5	72.5

Anti-Ice Adjustment

ANTI-ICE CONFIGURATION	LEVEL OFF WEIGHT ADJUSTMENT (1000 KG)												
	PRESSURE ALTITUDE (1000 FT)												
	8	10	12	14	16	18	20	22	24	26	28	30	32
ENGINE ONLY		-2.2	-2.0	-2.7	-2.1	-1.8	-1.6	-1.4	-1.3	-1.2	-1.2	-1.1	-0.8
ENGINE & WING	-5.8	-8.1	-8.1	-7.9	-7.4	-7.0	-6.4	-5.6	-4.9	-4.5	-4.3	-4.1	

Copyright © The Boeing Company. See title page for details.

ALL ENGINES

Long Range Cruise Critical Fuel Reserves

Ground to Air Miles Conversion

AIR DISTANCE (NM)					GROUND DISTANCE (NM)	AIR DISTANCE (NM)				
HEADWIND COMPONENT (KTS)						TAILWIND COMPONENT (KTS)				
100	80	60	40	20		20	40	60	80	100
294	268	247	229	214	200	188	177	168	159	152
603	548	501	462	429	400	375	352	333	315	299
913	827	756	695	644	600	561	528	498	471	447
1224	1106	1010	929	860	800	748	703	662	626	594
1534	1386	1264	1162	1075	1000	935	878	827	782	742
1844	1665	1518	1395	1290	1200	1122	1053	992	938	889
2154	1945	1772	1628	1505	1400	1308	1228	1157	1094	1037
2465	2224	2027	1861	1721	1600	1495	1403	1322	1249	1184
2775	2504	2281	2094	1936	1800	1682	1578	1487	1405	1332

Critical Fuel (1000 KG)

AIR DIST (NM)	WEIGHT AT CRITICAL POINT (1000 KG)							
	35	40	45	50	55	60	65	70
200	1.7	1.7	1.8	1.9	1.9	2.0	2.1	2.1
300	2.4	2.4	2.5	2.6	2.7	2.8	2.9	3.0
400	3.1	3.1	3.2	3.4	3.5	3.6	3.7	3.9
500	3.8	3.8	4.0	4.1	4.3	4.4	4.6	4.7
600	4.5	4.5	4.7	4.9	5.0	5.2	5.4	5.6
700	5.2	5.2	5.4	5.6	5.8	6.0	6.2	6.4
800	5.9	5.9	6.1	6.4	6.6	6.8	7.0	7.3
900	6.6	6.6	6.8	7.1	7.3	7.6	7.8	8.1
1000	7.3	7.3	7.5	7.8	8.1	8.4	8.6	8.9
1100	8.0	8.0	8.2	8.5	8.8	9.1	9.4	9.7
1200	8.7	8.7	8.9	9.3	9.6	9.9	10.3	10.6
1300	9.4	9.4	9.6	10.0	10.4	10.7	11.1	11.4
1400	10.1	10.1	10.3	10.7	11.1	11.5	11.8	12.2
1500	10.8	10.8	11.0	11.4	11.8	12.2	12.6	13.0
1600	11.5	11.5	11.7	12.1	12.6	13.0	13.4	13.8
1700	12.2	12.2	12.4	12.8	13.3	13.7	14.2	14.6
1800	12.9	12.9	13.1	13.5	14.0	14.5	15.0	15.4

Based on: Emergency descent to 10000 ft. Level cruise at 10000 ft. 250 KIAS descent to 1500 ft. 15 minute hold at 1500 ft. One missed approach; approach and land. 5% allowance for wind errors.
Increase fuel required 0.8% for each 10°C hotter than ISA conditions.
If icing conditions exist, increase fuel by 14% to account for engine and wing anti-ice on and ice accumulation on unheated surfaces.
Allowance for performance deterioration not included.
Compare the fuel required from this table with critical fuel reserves for one engine inoperative and use the higher of the two.

Copyright © The Boeing Company. See title page for details.

ENGINE INOP

Long Range Cruise Critical Fuel Reserves
Ground to Air Miles Conversion

AIR DISTANCE (NM) HEADWIND COMPONENT (KTS)					GROUND DISTANCE (NM)	AIR DISTANCE (NM) TAILWIND COMPONENT (KTS)				
100	80	60	40	20		20	40	60	80	100
299	272	250	231	214	200	188	177	167	158	150
617	557	507	465	430	400	374	351	330	312	296
935	841	764	700	646	600	560	525	494	466	442
1253	1126	1022	935	862	800	746	699	657	620	587
1572	1411	1279	1170	1078	1000	932	873	821	775	733
1890	1695	1537	1405	1295	1200	1118	1047	984	929	879
2209	1980	1794	1640	1511	1400	1304	1221	1148	1083	1025
2527	2265	2052	1875	1727	1600	1491	1395	1311	1237	1171
2845	2549	2309	2110	1943	1800	1677	1569	1475	1391	1316

Critical Fuel (1000 KG)

AIR DIST (NM)	WEIGHT AT CRITICAL POINT (1000 KG)							
	35	40	45	50	55	60	65	70
200	1.5	1.5	1.6	1.7	1.7	1.8	1.9	2.0
300	2.1	2.1	2.2	2.3	2.4	2.5	2.6	2.8
400	2.7	2.7	2.9	3.0	3.1	3.3	3.4	3.6
500	3.3	3.3	3.5	3.7	3.8	4.0	4.2	4.4
600	3.9	4.0	4.2	4.4	4.6	4.7	5.0	5.2
700	4.5	4.6	4.8	5.0	5.3	5.5	5.7	6.0
800	5.2	5.2	5.4	5.7	6.0	6.2	6.5	6.7
900	5.8	5.8	6.1	6.4	6.6	6.9	7.2	7.5
1000	6.4	6.4	6.7	7.0	7.3	7.6	7.9	8.3
1100	7.0	7.0	7.3	7.6	8.0	8.3	8.7	9.0
1200	7.6	7.6	7.9	8.3	8.7	9.0	9.4	9.8
1300	8.2	8.3	8.5	8.9	9.3	9.7	10.1	10.6
1400	8.8	8.9	9.1	9.6	10.0	10.4	10.9	11.3
1500	9.5	9.5	9.8	10.2	10.7	11.1	11.6	12.0
1600	10.1	10.1	10.4	10.9	11.3	11.8	12.3	12.8
1700	10.7	10.7	11.0	11.5	12.0	12.5	13.0	13.5
1800	11.3	11.3	11.6	12.1	12.6	13.2	13.7	14.3

Based on: Emergency descent to 10000 ft. Level cruise at 10000 ft. 250 KIAS descent to 1500 ft. 15 minute hold at 1500 ft. One missed approach; approach and land. 5% allowance for wind errors.
Increase fuel required 0.8% for each 10°C hotter than ISA conditions.
If icing conditions exist, increase fuel by 15% to account for engine and wing anti-ice on and ice accumulation on unheated surfaces.
Allowance for performance deterioration not included.
Compare the fuel required from this table with critical fuel reserves for all engines operative and use the higher of the two.

Copyright © The Boeing Company. See title page for details.

Intentionally
Blank

Copyright © The Boeing Company. See title page for details.

Landing Field Limit Weight
Flaps 40
Wind Corrected Field Length (M)

FIELD LENGTH AVAILABLE (M)	WIND COMPONENT (KTS)							
	-15	-10	-5	0	10	20	30	40
1000		810	900	1000	1060	1130	1200	1270
1200	890	990	1100	1200	1270	1340	1420	1500
1400	1070	1180	1290	1400	1470	1560	1640	1720
1600	1250	1360	1480	1600	1680	1770	1850	1950
1800	1430	1550	1670	1800	1890	1980	2070	2170
2000	1610	1730	1860	2000	2100	2190	2290	2400
2200	1790	1920	2050	2200	2310			
2400	1970	2110	2250	2400				
2600	2150	2290						
2800	2330							

Field Limit Weight (1000 KG)

WIND CORR'D FIELD LENGTH (M)	AIRPORT PRESSURE ALTITUDE (FT)							
	0		1000		2000		3000	
	DRY	WET	DRY	WET	DRY	WET	DRY	WET
1000	36.8							
1200	47.5	39.1	46.1	37.9	44.6	36.7	43.3	
1400	57.4	48.4	56.1	47.0	54.8	45.5	53.3	44.2
1600	66.1	57.1	64.4	55.8	62.7	54.4	61.2	52.9
1800	74.3	64.4	72.6	62.9	70.8	61.3	69.1	59.9
2000		71.9		70.2		68.5		66.6
2200								73.2

Decrease field limit weight 4500 kg when using manual speed brakes.

Copyright © The Boeing Company. See title page for details.

Landing Climb Limit Weight

Valid for approach with Flaps 15 and landing with Flaps 30 or 40

Based on engine bleed for packs on and anti-ice off

AIRPORT OAT		LANDING CLIMB LIMIT WEIGHT (1000 KG)			
		AIRPORT PRESSURE ALTITUDE (FT)			
°C	°F	0	1000	2000	3000
54	129	54.2			
52	126	55.3	53.5		
50	122	56.4	54.6	52.7	
48	118	57.5	55.7	53.8	52.0
46	115	58.7	56.8	54.9	53.0
44	111	59.8	57.9	55.9	54.1
42	108	61.0	59.0	57.0	55.1
40	104	62.2	60.2	58.1	56.2
38	100	63.4	61.4	59.3	57.3
36	97	64.7	62.6	60.5	58.5
34	93	66.0	63.8	61.7	59.6
32	90	67.3	65.1	62.9	60.7
30	86	68.6	66.3	64.0	61.8
28	82	68.7	67.5	65.2	63.0
26	79	68.7	67.6	66.4	64.1
24	75	68.8	67.6	66.4	65.3
22	72	68.8	67.7	66.5	65.3
20	68	68.9	67.7	66.5	65.3
18	64	68.9	67.8	66.6	65.4
16	61	69.0	67.8	66.6	65.5
14	57	69.0	67.9	66.7	65.5
12	54	69.1	67.9	66.7	65.6
10	50	69.1	67.9	66.7	65.6
-40	-40	69.6	68.4	67.2	66.1

With engine bleed for packs off, increase weight by 1100 kg.
With engine anti-ice on, decrease weight by 200 kg.
With engine and wing anti-ice on, decrease weight by 950 kg.
When operating in icing conditions during any part of the flight with forecast landing temperature below 10°C, decrease weight by 4550 kg.

Copyright © The Boeing Company. See title page for details.

ENGINE INOP

Go-Around Climb Gradient
Flaps 15
Based on engine bleed for packs on and anti-ice off
Reference Go-Around Gradient (%)

OAT (°C)	PRESSURE ALTITUDE (FT)			
	0	1000	2000	3000
54	2.77			
50	3.31	2.87	2.41	
46	3.87	3.40	2.94	2.48
42	4.44	3.95	3.46	2.99
38	5.04	4.53	4.02	3.53
34	5.66	5.13	4.60	4.08
30	6.28	5.72	5.17	4.63
26	6.31	6.02	5.72	5.19
22	6.34	6.05	5.75	5.47
18	6.36	6.07	5.77	5.49
14	6.39	6.09	5.79	5.51
10	6.41	6.12	5.81	5.54

Gradient Adjustment for Weight (%)

WEIGHT (1000 KG)	REFERENCE GO-AROUND GRADIENT (%)							
	0	1	2	3	4	5	6	7
65	-2.33	-2.53	-2.83	-3.11	-3.36	-3.60	-3.85	-4.08
60	-1.70	-1.83	-2.05	-2.25	-2.43	-2.61	-2.79	-2.96
55	-0.92	-1.01	-1.13	-1.23	-1.33	-1.43	-1.53	-1.61
50	0.00	0.00	0.00	0.00	0.00	0.00	0.00	0.00
45	1.12	1.25	1.36	1.48	1.61	1.74	1.88	2.02
40	2.54	2.84	3.10	3.36	3.66	3.96	4.25	4.60

Gradient Adjustment for Speed (%)

SPEED (KIAS)	WEIGHT ADJUSTED GO-AROUND GRADIENT (%)							
	0	1	2	3	4	5	6	7
VREF	-0.32	-0.34	-0.35	-0.35	-0.36	-0.36	-0.36	-0.36
VREF+5	0.00	0.00	0.00	0.00	0.00	0.00	0.00	0.00
VREF+10	0.17	0.18	0.19	0.19	0.19	0.19	0.19	0.19
VREF+20	0.33	0.33	0.32	0.30	0.28	0.25	0.24	0.22
VREF+30	0.25	0.19	0.12	0.05	-0.01	-0.05	-0.07	-0.09

With engine bleed for packs off, increase gradient by 0.3%.
With engine anti-ice on, decrease gradient by 0.1%.
With engine and wing anti-ice on, decrease gradient by 0.3%.
When operating in icing conditions during any part of the flight with forecast landing temperatures below 10°C, decrease gradient by 0.6%

Copyright © The Boeing Company. See title page for details.

Quick Turnaround Limit Weight
Flaps 40

OAT		LIMIT WEIGHT (1000 KG)			
		AIRPORT PRESSURE ALTITUDE (FT)			
°C	°F	0	1000	2000	3000
50	122	72.2	70.9	69.5	
40	104	72.5	72.0	70.6	69.3
30	86	72.5	72.5	71.8	70.4
20	68	72.5	72.5	72.5	71.6
10	50	72.5	72.5	72.5	72.5
0	32	72.5	72.5	72.5	72.5
-10	14	72.5	72.5	72.5	72.5
-20	-4	72.5	72.5	72.5	72.5
-30	-22	72.5	72.5	72.5	72.5
-40	-40	72.5	72.5	72.5	72.5

Increase weight by 700 kg per 1% uphill slope. Decrease weight by 950 kg per 1% downhill slope.
Increase weight by 1750 kg per 10 knots headwind. Decrease weight by 6400 kg per 10 knots tailwind.

After landing at weights exceeding those shown above, adjusted for slope and wind, wait at least 62 minutes and check that wheel thermal plugs have not melted before executing a takeoff.

As an alternate procedure, ensure that each brake pressure plate surface temperature, without artificial cooling, is less than 218°C as follows: No sooner than 10 and no later than 15 minutes after parking, measure each brake pressure plate surface temperature at a minimum of two points per brake by an accurate method (using a Doric Microtemp 450 hand held thermometer or equivalent, hold temperature probe in place for 20 seconds or until reading stabilizes). If each measured temperature is less than 218°C, immediate dispatch is allowed; otherwise the required minimum ground wait period of 62 minutes applies.

Copyright © The Boeing Company. See title page for details.

Introduction

This chapter contains self dispatch performance data intended primarily for use by flight crews in the event that information cannot be obtained from the airline dispatch office. The takeoff data provided is for a single takeoff flap at max takeoff thrust. The range of conditions covered is limited to those normally encountered in airline operation. In the event of conflict between the data presented in this chapter and that contained in the approved Airplane Flight Manual, the Flight Manual shall always take precedence.

Takeoff

The maximum allowable takeoff weight will be the least of the Field, Climb and Obstacle Limit Weights as determined from the tables shown. Tire and Brake Energy Limits are not shown as they are not limiting for the range of conditions shown in this chapter.

JAROPS-1 requires that the runway length be adjusted to account for alignment of the airplane prior to takeoff. The table below provides TORA, TODA and ASDA adjustments for both 90 degree taxiway entry and 180 degree turnaround. For the 180 degree turnaround case, adjustments are provided for both a nominal 60 m runway as well as the minimum required for the stated minimum pavement width. These values may be used when obtaining takeoff weights from the Airplane Flight Manual or a takeoff analysis program. When using line-up allowances with the Field Length Limit chart, the field length available must be reduced by the ASDA adjustment.

	90 DEGREE TAXIWAY ENTRY	180 DEGREE TURNAROUND	
	MINIMUM LINE-UP DISTANCE (M)	NOMINAL LINE-UP DISTANCE (M) (60.0 M RUNWAY)	MINIMUM LINE-UP DISTANCE (M) (24.4 M RUNWAY)
TORA & TODA	9.6	15.0	15.0
ASDA	20.9	26.4	26.4

Field Limit Weight - Slope and Wind Corrections

These tables for dry and wet runways provide corrections to the field length available for the effects of runway slope and wind component along the runway. Enter the appropriate table with the available field length and runway slope to determine the slope corrected field length. Next enter the appropriate table with slope corrected field length and wind component to determine the slope and wind corrected field length.

Copyright © The Boeing Company. See title page for details.

Field and Climb Limit Weight

Tables are presented for selected airport pressure altitudes and runway conditions and show both Field and Climb Limit Weights. Enter the appropriate table for pressure altitude and runway condition with "Slope and Wind Corrected Field Length" determined above and airport OAT to obtain Field Limit Weight. Also read Climb Limit Weight for the same OAT. Intermediate altitudes may be interpolated or use next higher altitude. When finding a maximum weight for a wet runway, the dry runway limit weight must also be determined and the lower of the two weights used.

Obstacle Limit Weight

The Reference Obstacle Limit Weight table provides obstacle limit weights for reference airport conditions based on obstacle height above the runway surface and distance from brake release. Enter the adjustment tables to adjust the reference Obstacle Limit Weight for the effects of OAT, pressure altitude and wind as indicated. In the case of multiple obstacles, enter the tables successively with each obstacle and determine the most limiting weight.

When using line-up allowances with the Obstacle Limit chart, the obstacle distance from brake release must be reduced by the ASDA adjustment.

Enroute

Long Range Cruise Maximum Operating Altitude

These tables provide the maximum operating altitude in the same manner as the FMC. Maximum altitudes are shown for a given cruise weight and maneuver capability. Note that this table considers both thrust and buffet limits, providing the more limiting of the two. Any data that is thrust limited is denoted by an asterisk and represents only a thrust limited condition in level flight with 100 ft/min residual rate of climb. Flying above these altitudes with sustained banks in excess of approximately 15° may cause the airplane to lose speed and/or altitude. The altitudes shown in the table are limited to the maximum certified altitude of 41000 ft.

Long Range Cruise Trip Fuel and Time

Long Range Cruise Trip Fuel and Time tables are provided to determine trip time and fuel required to destination.

To determine trip fuel and time for a constant altitude cruise, first enter the Ground to Air Miles Conversion table to convert ground distance and enroute wind to an equivalent still air distance for use with the Reference Fuel and Time tables. Next, enter the Reference Fuel and Time table with

Copyright © The Boeing Company. See title page for details.

air distance from the Ground to Air Miles Conversion table and the desired altitude and read Reference Fuel and Time Required. Lastly, enter the Fuel Required Adjustment table with the Reference Fuel and the planned landing weight to obtain the adjustment to the fuel required at the planned landing weight.

Long Range Cruise Step Climb Trip Fuel and Time

The Long Range Cruise Step Climb Trip Fuel and Time tables are provided to determine trip time and fuel required to destination when flying a step climb profile. Step climb profiles are based on 4000 ft step climbs to keep the flight within 2000 ft of the optimum altitude for the current cruise weight. To determine trip fuel and time, enter the Ground to Air Miles Conversion table and determine air distance as discussed above. Then enter the Trip Fuel and Time Required table with air distance and planned landing weight to read trip fuel. Continue across the table to read trip time.

Short Trip Fuel and Time

These tables are provided to determine trip fuel and time for short distances or alternates. Obtain air distance from the table using the ground distance and wind component to the alternate. Enter the Trip Fuel and Time Required table with air distance and read trip fuel required for the expected landing weight, together with time to alternate at right. For distances greater than shown or other altitudes, use the Long Range Cruise Trip Fuel and Time tables.

Holding Planning

This table provides total fuel flow information necessary for planning flaps up holding and reserve fuel requirements. Data is based on the FMC holding speed schedule which is the higher of the maximum endurance and flaps up maneuver speeds. As noted, the fuel flow is based on flight in a racetrack holding pattern. For holding in straight and level flight, reduce table values by 5%.

Crew Oxygen Requirements

Tables are provided to determine the minimum dispatch oxygen pressure for protective breathing equipment used by the flight crew. Enter the number of crew plus observers using oxygen and read the minimum cylinder pressure required for the appropriate bottle temperature and size. These pressures provide sufficient oxygen for 15 minutes of protective breathing for each flight crew member plus 10% contingency at 8000 ft cabin pressure altitude. Route specific analysis is necessary to determine if additional oxygen pressure is needed to meet supplemental oxygen requirements.

Copyright © The Boeing Company. See title page for details.

Net Level Off Weight

The Net Level Off Weight table is provided to determine terrain clearance capability in straight and level flight following an engine failure. Regulations require terrain clearance planning based on net performance which is the gross (or actual) gradient performance degraded by 1.1%. In addition, the net level off pressure altitude must clear the terrain by 1000 ft.

To determine the maximum weight for terrain clearance, enter the table with required net level off pressure altitude and expected ISA deviation to obtain weight. Adjust weight for anti-ice operation as noted below the table.

Extended Range Operations

Regulations require that flights conducted over a route that contains a point further than one hour's time at "normal one engine inoperative speed" from an adequate diversion airport comply with rules set up specifically for "Extended Range Operation with Two Engine airplanes." This section provides reserve fuel planning information for the "Critical Fuel Scenario" based on two engine operation at Long Range Cruise as well as single engine operation at Long Range Cruise.

Long Range Cruise Critical Fuel Reserves

Enter the Ground to Air Miles Conversion table with forecast wind and ground distance to diversion airport from critical point to obtain air distance. Now enter the Critical Fuel table with air distance and expected weight at the critical point and read required fuel. Apply the noted fuel adjustments as necessary. Regulations require a 5% allowance for performance deterioration unless a value has been established by the operator for inservice deterioration.

As noted below each table, the fuel required is the greater of the two engine fuel and the single engine fuel. This fuel is compared to the amount of fuel normally onboard the airplane at that point in the route. If the fuel required by the critical fuel reserves exceeds the amount of fuel normally expected, the fuel load must be adjusted accordingly.

Landing

Tables are provided for determining the maximum landing weight as limited by field length or climb requirements for a single landing flap.

Maximum landing weight is the lowest of the field length limit weight, climb limit weight, or maximum certified landing weight.

Copyright © The Boeing Company. See title page for details.

Landing Field Limit Weight

Obtain wind corrected field length by entering the Wind Corrected Field Length table with field length available and wind component along the runway. Now enter the Field Limit Weight table with wind corrected field length and pressure altitude to read field limit weight for the expected runway condition.

Landing Climb Limit Weight

Enter the table with airport OAT and pressure altitude to read landing climb limit weight. Apply the noted adjustments as required.

Go-Around Climb Gradient

Enter the Reference Go-Around Gradient table with airport OAT and pressure altitude to determine the reference go-around gradient. Then adjust the reference gradient for airplane weight and speed using the tables provided to determine the weight and speed adjusted go-around gradient. Apply the necessary corrections for engine bleed configuration and icing conditions as noted.

Quick Turnaround Limit Weight

Enter the table with airport pressure altitude and OAT to read maximum quick turnaround weight. Apply the noted adjustments as required.

If the landing weight exceeds the maximum quick turnaround weight, wait the specified time and then check that the wheel thermal plugs have not melted before executing a subsequent takeoff, or ensure the brake temperature is within limits using the alternate procedure described on the page.

Copyright © The Boeing Company. See title page for details.

Intentionally
Blank

Copyright © The Boeing Company. See title page for details.

Takeoff Field Corrections - Dry Runway

Slope Corrections

FIELD LENGTH AVAILABLE (FT)	SLOPE CORRECTED FIELD LENGTH (FT)								
	RUNWAY SLOPE (%)								
	-2.0	-1.5	-1.0	-0.5	0.0	0.5	1.0	1.5	2.0
4200	4230	4230	4220	4210	4200	4110	4030	3940	3850
4600	4680	4660	4640	4620	4600	4490	4380	4270	4160
5000	5130	5100	5070	5030	5000	4870	4730	4600	4470
5400	5580	5540	5490	5450	5400	5240	5090	4930	4770
5800	6030	5970	5920	5860	5800	5620	5440	5260	5080
6200	6480	6410	6340	6270	6200	6000	5790	5590	5390
6600	6930	6850	6760	6680	6600	6370	6150	5920	5690
7000	7380	7280	7190	7090	7000	6750	6500	6250	6000
7400	7830	7720	7610	7510	7400	7120	6830	6550	6270
7800	8280	8160	8040	7920	7800	7480	7170	6850	6530
8200	8730	8590	8460	8330	8200	7850	7500	7150	6800
8600	9180	9030	8890	8740	8600	8220	7830	7450	7070
9000	9630	9470	9310	9160	9000	8580	8170	7750	7330
9400	10080	9910	9740	9570	9400	8950	8500	8050	7600
9800	10530	10340	10160	9980	9800	9320	8830	8350	7870
10200	10980	10780	10590	10390	10200	9690	9180	8660	8150
10600	11430	11220	11010	10810	10600	10060	9530	8990	8450
11000	11880	11660	11440	11220	11000	10440	9880	9310	8750
11400	12330	12090	11860	11630	11400	10810	10230	9640	9050
11800	12780	12530	12290	12040	11800	11190	10580	9960	9350

Wind Corrections

SLOPE CORR'D FIELD LENGTH (FT)	SLOPE & WIND CORRECTED FIELD LENGTH (FT)							
	WIND COMPONENT (KTS)							
	-15	-10	-5	0	10	20	30	40
4200	3040	3430	3810	4200	4450	4710	4960	5220
4600	3380	3790	4190	4600	4860	5130	5390	5650
5000	3720	4150	4570	5000	5270	5540	5810	6080
5400	4060	4510	4950	5400	5680	5960	6240	6520
5800	4400	4870	5330	5800	6090	6380	6660	6950
6200	4740	5230	5710	6200	6500	6790	7090	7380
6600	5080	5590	6090	6600	6900	7210	7510	7820
7000	5420	5950	6470	7000	7310	7630	7940	8250
7400	5760	6310	6850	7400	7720	8040	8360	8680
7800	6100	6670	7230	7800	8130	8460	8790	9120
8200	6440	7030	7610	8200	8540	8880	9210	9550
8600	6780	7390	7990	8600	8950	9290	9640	9980
9000	7120	7750	8370	9000	9350	9710	10060	10420
9400	7460	8110	8750	9400	9760	10130	10490	10850
9800	7800	8470	9130	9800	10170	10540	10910	11280
10200	8140	8830	9510	10200	10580	10960	11340	11720
10600	8480	9190	9890	10600	10990	11380	11760	12150
11000	8820	9550	10270	11000	11400	11790	12190	12580
11400	9160	9910	10650	11400	11800	12210	12610	13020
11800	9500	10260	11030	11800	12210	12630	13040	13450

Copyright © The Boeing Company. See title page for details.

Takeoff Field & Climb Limit Weights - Dry Runway

Flaps 5

Sea Level Pressure Altitude

CORR'D FIELD LENGTH (FT)	FIELD LIMIT WEIGHT (1000 LB)										
	OAT										
	°F -40	60	70	75	79	82	86	100	105	110	120
	°C -40	16	21	24	26	28	30	38	41	43	49
4000	129.1	119.1	118.1	117.6	117.2	116.9	116.5	111.3	109.3	107.4	103.3
4200	132.6	122.2	121.2	120.7	120.3	120.0	119.6	114.2	112.2	110.2	106.1
4600	139.3	128.4	127.3	126.8	126.4	126.0	125.6	120.0	117.9	115.8	111.4
5000	145.5	134.2	133.0	132.5	132.0	131.7	131.2	125.4	123.2	121.0	116.4
5400	151.1	139.4	138.2	137.7	137.2	136.8	136.4	130.3	128.1	125.8	121.1
5800	156.6	144.5	143.3	142.7	142.2	141.8	141.3	135.1	132.8	130.4	125.5
6200	162.0	149.4	148.2	147.5	147.0	146.7	146.2	139.7	137.3	134.9	129.8
6600	167.1	154.2	152.9	152.3	151.7	151.4	150.8	144.1	141.7	139.2	133.9
7000	172.2	158.8	157.5	156.8	156.3	155.9	155.4	148.4	145.9	143.3	137.9
7400	177.1	163.2	161.9	161.2	160.6	160.2	159.7	152.5	149.9	147.2	141.6
7800	180.0	167.6	166.2	165.5	164.9	164.5	163.9	156.5	153.8	151.1	145.3
8200	180.0	172.1	170.6	169.9	169.3	168.9	168.3	160.7	157.9	155.1	149.2
8600	180.0	176.4	174.9	174.2	173.6	173.1	172.5	164.7	161.9	159.0	152.9
9000	180.0	180.0	178.6	177.8	177.2	176.7	176.1	168.2	165.2	162.2	156.0
9400	180.0	180.0	180.0	180.0	180.5	180.0	179.3	171.2	168.2	165.1	158.7
9800	180.0	180.0	180.0	180.0	180.0	180.0	180.0	174.2	171.1	167.9	161.4
10200	180.0	180.0	180.0	180.0	180.0	180.0	180.0	177.0	173.9	170.7	164.0
10600	180.0	180.0	180.0	180.0	180.0	180.0	180.0	179.9	176.6	173.4	166.5
CLIMB LIMIT WT (1000 LB)	164.1	162.6	162.3	162.1	161.9	161.8	161.6	150.5	146.6	142.7	135.1

1000 FT Pressure Altitude

CORR'D FIELD LENGTH (FT)	FIELD LIMIT WEIGHT (1000 LB)										
	OAT										
	°F -40	60	70	75	79	82	86	100	105	110	120
	°C -40	16	21	24	26	28	30	38	41	43	49
4000	126.2	116.1	115.1	114.6	114.2	113.9	112.6	107.3	105.4	103.5	99.5
4200	129.6	119.2	118.2	117.7	117.3	117.0	115.6	110.1	108.2	106.2	102.2
4600	136.1	125.2	124.1	123.6	123.2	122.9	121.4	115.7	113.6	111.6	107.3
5000	142.2	130.8	129.7	129.2	128.7	128.4	126.9	120.9	118.8	116.6	112.2
5400	147.7	135.9	134.8	134.2	133.8	133.4	131.8	125.7	123.5	121.2	116.6
5800	153.1	140.9	139.7	139.1	138.7	138.3	136.7	130.3	128.0	125.7	120.9
6200	158.3	145.7	144.5	143.9	143.4	143.0	141.3	134.7	132.4	130.0	125.1
6600	163.4	150.3	149.1	148.5	148.0	147.6	145.8	139.0	136.6	134.1	129.0
7000	168.3	154.8	153.5	152.9	152.4	152.0	150.2	143.1	140.6	138.1	132.8
7400	173.1	159.1	157.8	157.1	156.6	156.2	154.3	147.0	144.4	141.8	136.4
7800	177.7	163.4	162.0	161.3	160.8	160.3	158.4	150.9	148.2	145.5	139.9
8200	180.0	167.7	166.3	165.6	165.1	164.6	162.6	154.9	152.2	149.4	143.7
8600	180.0	171.9	170.5	169.8	169.2	168.7	166.7	158.8	155.9	153.1	147.2
9000	180.0	175.5	174.0	173.3	172.7	172.3	170.2	162.0	159.1	156.2	150.2
9400	180.0	178.7	177.2	176.5	175.9	175.4	173.2	164.9	161.9	158.9	152.7
9800	180.0	180.0	180.0	179.6	179.0	178.5	176.3	167.7	164.7	161.6	155.3
10200	180.0	180.0	180.0	180.0	180.0	180.0	179.2	170.5	167.4	164.2	157.7
10600	180.0	180.0	180.0	180.0	180.0	180.0	180.0	173.1	170.0	166.7	160.1
CLIMB LIMIT WT (1000 LB)	161.1	159.5	159.2	159.0	158.9	158.8	155.9	145.1	141.2	137.5	130.2

Copyright © The Boeing Company. See title page for details.

Takeoff Field & Climb Limit Weights - Dry Runway

Flaps 5

2000 FT Pressure Altitude

CORR'D FIELD LENGTH (FT)	FIELD LIMIT WEIGHT (1000 LB)										
	OAT										
	°F -40	60	70	75	79	82	86	100	105	110	120
	°C -40	16	21	24	26	28	30	38	41	43	49
4000	123.4	113.1	112.1	111.6	111.2	110.0	108.5	103.3	101.5	99.6	95.7
4200	126.6	116.1	115.1	114.6	114.1	112.9	111.4	106.0	104.1	102.2	98.3
4600	133.0	122.0	120.9	120.3	119.9	118.6	117.0	111.4	109.4	107.4	103.2
5000	139.0	127.5	126.3	125.8	125.3	124.0	122.3	116.4	114.4	112.3	107.9
5400	144.4	132.5	131.3	130.7	130.2	128.9	127.1	121.0	118.9	116.7	112.2
5800	149.6	137.3	136.1	135.5	135.0	133.6	131.8	125.5	123.3	121.0	116.4
6200	154.8	142.0	140.7	140.1	139.6	138.1	136.3	129.7	127.5	125.2	120.4
6600	159.7	146.5	145.2	144.6	144.0	142.5	140.6	133.9	131.5	129.1	124.2
7000	164.5	150.9	149.6	148.9	148.3	146.8	144.8	137.8	135.4	133.0	127.8
7400	169.1	155.1	153.7	153.0	152.4	150.8	148.8	141.6	139.1	136.5	131.2
7800	173.6	159.2	157.7	157.0	156.4	154.8	152.7	145.3	142.7	140.1	134.6
8200	178.3	163.5	162.0	161.2	160.6	158.9	156.8	149.1	146.5	143.8	138.2
8600	180.0	167.5	166.0	165.2	164.6	162.9	160.6	152.8	150.1	147.3	141.5
9000	180.0	171.0	169.4	168.7	168.0	166.3	164.0	155.9	153.1	150.3	144.4
9400	180.0	174.1	172.5	171.7	171.0	169.2	166.9	158.6	155.8	152.9	146.8
9800	180.0	177.2	175.5	174.7	174.0	172.2	169.8	161.3	158.4	155.4	149.2
10200	180.0	180.0	178.4	177.6	176.9	175.0	172.5	163.9	160.9	157.9	151.5
10600	180.0	180.0	180.0	180.0	179.7	177.8	175.3	166.4	163.4	160.2	153.7
CLIMB LIMIT WT (1000 LB)	158.1	156.4	156.1	156.0	155.8	153.4	150.2	139.7	136.0	132.4	125.3

3000 FT Pressure Altitude

CORR'D FIELD LENGTH (FT)	FIELD LIMIT WEIGHT (1000 LB)										
	OAT										
	°F -40	60	70	75	79	82	86	100	105	110	120
	°C -40	16	21	24	26	28	30	38	41	43	49
4000	120.1	110.0	109.0	108.5	107.2	106.0	104.5	99.4	97.7	95.8	92.2
4200	123.3	113.0	111.9	111.4	110.0	108.8	107.3	102.1	100.2	98.4	94.7
4600	129.5	118.7	117.6	117.1	115.6	114.3	112.7	107.2	105.3	103.3	99.4
5000	135.3	124.0	122.9	122.3	120.8	119.5	117.8	112.1	110.1	108.0	104.0
5400	140.6	128.9	127.7	127.2	125.5	124.2	122.4	116.5	114.5	112.3	108.2
5800	145.7	133.6	132.4	131.8	130.1	128.7	126.9	120.8	118.7	116.5	112.2
6200	150.7	138.2	136.9	136.3	134.6	133.1	131.3	125.0	122.8	120.5	116.0
6600	155.5	142.6	141.3	140.7	138.9	137.4	135.4	128.9	126.6	124.3	119.7
7000	160.1	146.8	145.5	144.8	143.0	141.4	139.4	132.7	130.4	127.9	123.2
7400	164.6	150.8	149.5	148.8	146.9	145.3	143.2	136.3	133.9	131.4	126.4
7800	169.0	154.8	153.4	152.7	150.7	149.1	147.0	139.8	137.3	134.7	129.6
8200	173.6	159.0	157.5	156.8	154.8	153.1	150.9	143.5	141.0	138.3	133.1
8600	177.9	162.9	161.4	160.7	158.6	156.9	154.6	147.1	144.4	141.7	136.3
9000	180.0	166.3	164.8	164.0	161.9	160.1	157.8	150.0	147.3	144.5	139.0
9400	180.0	169.2	167.7	166.9	164.7	162.9	160.5	152.6	149.8	146.9	141.3
9800	180.0	172.2	170.6	169.8	167.6	165.7	163.3	155.1	152.3	149.3	143.6
10200	180.0	175.0	173.4	172.6	170.3	168.4	165.9	157.6	154.7	151.6	145.7
10600	180.0	177.8	176.1	175.3	173.0	171.0	168.5	159.9	157.0	153.9	147.8
CLIMB LIMIT WT (1000 LB)	154.9	153.4	153.1	152.9	150.0	147.7	144.6	134.5	130.8	127.4	120.5

Copyright © The Boeing Company. See title page for details.

Takeoff Field Corrections - Wet Runway

Slope Corrections

FIELD LENGTH AVAILABLE (FT)	SLOPE CORRECTED FIELD LENGTH (FT)								
	RUNWAY SLOPE (%)								
	-2.0	-1.5	-1.0	-0.5	0.0	0.5	1.0	1.5	2.0
4200	4240	4230	4220	4210	4200	4140	4080	4020	3970
4600	4700	4670	4650	4620	4600	4520	4450	4370	4300
5000	5160	5120	5080	5040	5000	4910	4810	4720	4630
5400	5620	5560	5510	5450	5400	5290	5180	5070	4960
5800	6080	6010	5940	5870	5800	5670	5540	5410	5290
6200	6530	6450	6370	6280	6200	6050	5910	5760	5620
6600	6990	6900	6800	6700	6600	6440	6270	6110	5950
7000	7450	7340	7230	7110	7000	6820	6640	6460	6280
7400	7910	7780	7660	7530	7400	7200	7000	6800	6610
7800	8370	8230	8090	7940	7800	7580	7370	7150	6940
8200	8830	8670	8520	8360	8200	7960	7730	7490	7260
8600	9290	9120	8950	8770	8600	8340	8080	7820	7570
9000	9750	9560	9380	9190	9000	8720	8440	8160	7880
9400	10210	10010	9810	9600	9400	9100	8790	8490	8190
9800	10670	10450	10240	10020	9800	9470	9150	8820	8500
10200	11130	10900	10670	10430	10200	9850	9500	9150	8810
10600	11590	11340	11100	10850	10600	10230	9860	9490	9120
11000	12050	11790	11530	11260	11000	10610	10210	9820	9430
11400	12510	12230	11960	11680	11400	10980	10570	10150	9740
11800	12970	12680	12390	12090	11800	11360	10920	10480	10050

Wind Corrections

SLOPE CORR'D FIELD LENGTH (FT)	SLOPE & WIND CORRECTED FIELD LENGTH (FT)							
	WIND COMPONENT (KTS)							
	-15	-10	-5	0	10	20	30	40
4200	2970	3380	3790	4200	4470	4760	5050	5350
4600	3310	3740	4170	4600	4880	5180	5490	5810
5000	3650	4100	4550	5000	5300	5610	5930	6280
5400	3990	4460	4930	5400	5710	6030	6380	6740
5800	4330	4820	5310	5800	6120	6460	6820	7200
6200	4660	5180	5690	6200	6530	6880	7260	7660
6600	5000	5540	6070	6600	6940	7310	7700	8130
7000	5340	5890	6450	7000	7350	7730	8150	8590
7400	5680	6250	6830	7400	7760	8160	8590	9050
7800	6020	6610	7210	7800	8170	8580	9030	9510
8200	6360	6970	7590	8200	8580	9010	9470	9980
8600	6700	7330	7970	8600	9000	9430	9910	10440
9000	7030	7690	8340	9000	9410	9860	10360	10900
9400	7370	8050	8720	9400	9820	10280	10800	11360
9800	7710	8410	9100	9800	10230	10710	11240	11830
10200	8050	8770	9480	10200	10640	11130	11680	12290
10600	8390	9130	9860	10600	11050	11560	12130	12750
11000	8730	9480	10240	11000	11460	11980	12570	13210
11400	9060	9840	10620	11400	11870	12410	13010	13680
11800	9400	10200	11000	11800	12280	12830	13450	14140

Copyright © The Boeing Company. See title page for details.

Takeoff Field & Climb Limit Weights - Wet Runway

Flaps 5

Sea Level Pressure Altitude

CORR'D FIELD LENGTH (FT)	FIELD LIMIT WEIGHT (1000 LB)										
	OAT										
	°F -40	60	70	75	79	82	86	100	105	110	120
	°C -40	16	21	24	26	28	30	38	41	43	49
4800	142.8	130.6	129.4	128.8	128.4	128.0	127.5	121.3	119.1	116.9	112.6
5000	146.0	133.4	132.2	131.6	131.1	130.8	130.3	123.9	121.7	119.4	115.0
5400	151.5	138.4	137.2	136.6	136.1	135.7	135.2	128.6	126.2	123.9	119.3
5800	156.9	143.4	142.1	141.4	140.9	140.5	140.0	133.1	130.7	128.3	123.5
6200	162.1	148.1	146.8	146.1	145.6	145.2	144.6	137.5	135.0	132.5	127.6
6600	167.2	152.7	151.3	150.7	150.1	149.7	149.1	141.8	139.2	136.6	131.5
7000	172.1	157.2	155.8	155.0	154.5	154.1	153.5	145.9	143.2	140.6	135.3
7400	176.8	161.4	159.9	159.2	158.6	158.2	157.6	149.8	147.0	144.3	138.9
7800	180.0	165.6	164.0	163.3	162.7	162.2	161.6	153.6	150.7	147.9	142.3
8200	180.0	169.7	168.1	167.4	166.7	166.3	165.6	157.4	154.4	151.6	145.8
8600	180.0	173.7	172.1	171.3	170.7	170.2	169.6	161.1	158.1	155.1	149.2
9000	180.0	177.5	175.9	175.1	174.4	173.9	173.2	164.6	161.5	158.5	152.4
9400	180.0	180.0	179.3	178.5	177.8	177.3	176.6	167.7	164.6	161.5	155.3
9800	180.0	180.0	180.0	180.0	180.0	180.0	179.9	170.8	167.6	164.4	158.1
10200	180.0	180.0	180.0	180.0	180.0	180.0	180.0	174.0	170.7	167.5	161.0
10600	180.0	180.0	180.0	180.0	180.0	180.0	180.0	177.2	173.9	170.5	163.9
11000	180.0	180.0	180.0	180.0	180.0	180.0	180.0	180.0	177.0	173.6	166.8
11400	180.0	180.0	180.0	180.0	180.0	180.0	180.0	180.0	180.0	176.5	169.6
CLIMB LIMIT WT (1000 LB)	164.1	162.6	162.3	162.1	161.9	161.8	161.6	150.5	146.6	142.7	135.1

1000 FT Pressure Altitude

CORR'D FIELD LENGTH (FT)	FIELD LIMIT WEIGHT (1000 LB)										
	OAT										
	°F -40	60	70	75	79	82	86	100	105	110	120
	°C -40	16	21	24	26	28	30	38	41	43	49
4800	139.1	127.1	125.9	125.3	124.8	124.5	122.8	116.7	114.7	112.6	108.4
5000	142.1	129.8	128.6	128.0	127.5	127.1	125.4	119.2	117.1	115.0	110.7
5400	147.5	134.7	133.5	132.9	132.4	132.0	130.2	123.7	121.5	119.3	114.9
5800	152.8	139.5	138.2	137.6	137.0	136.6	134.8	128.1	125.8	123.5	118.9
6200	157.9	144.1	142.8	142.1	141.6	141.1	139.2	132.3	129.9	127.6	122.8
6600	162.8	148.6	147.3	146.6	146.0	145.5	143.5	136.4	134.0	131.5	126.6
7000	167.6	152.9	151.5	150.8	150.2	149.7	147.7	140.3	137.8	135.3	130.2
7400	172.1	157.0	155.6	154.8	154.2	153.8	151.6	144.0	141.4	138.8	133.6
7800	176.6	161.0	159.6	158.8	158.2	157.7	155.5	147.7	145.0	142.3	136.9
8200	180.0	165.0	163.5	162.7	162.1	161.6	159.3	151.3	148.5	145.8	140.3
8600	180.0	168.9	167.4	166.6	165.9	165.4	163.1	154.8	152.0	149.2	143.5
9000	180.0	172.6	171.0	170.2	169.5	169.0	166.6	158.2	155.3	152.4	146.6
9400	180.0	176.0	174.4	173.5	172.8	172.3	169.9	161.2	158.2	155.3	149.3
9800	180.0	179.3	177.6	176.7	176.0	175.4	173.0	164.1	161.1	158.0	152.0
10200	180.0	180.0	180.0	180.0	179.3	178.7	176.2	167.2	164.1	160.9	154.7
10600	180.0	180.0	180.0	180.0	180.0	180.0	179.5	170.2	167.1	163.9	157.5
11000	180.0	180.0	180.0	180.0	180.0	180.0	180.0	173.2	170.0	166.7	160.2
11400	180.0	180.0	180.0	180.0	180.0	180.0	180.0	176.2	172.9	169.5	162.9
CLIMB LIMIT WT (1000 LB)	161.1	159.5	159.2	159.0	158.9	158.8	155.9	145.1	141.2	137.5	130.2

Copyright © The Boeing Company. See title page for details.

Takeoff Field & Climb Limit Weights - Wet Runway

Flaps 5

2000 FT Pressure Altitude

CORR'D FIELD LENGTH (FT)	FIELD LIMIT WEIGHT (1000 LB)										
	OAT										
	°F -40	60	70	75	79	82	86	100	105	110	120
	°C -40	16	21	24	26	28	30	38	41	43	49
4800	135.8	123.4	122.2	121.6	121.1	119.8	118.1	112.3	110.3	108.3	104.4
5000	138.8	126.1	124.8	124.2	123.7	122.4	120.6	114.7	112.7	110.6	106.7
5400	144.0	130.8	129.6	128.9	128.4	127.0	125.2	119.0	116.9	114.8	110.7
5800	149.2	135.5	134.1	133.5	132.9	131.5	129.6	123.2	121.0	118.8	114.5
6200	154.1	140.0	138.6	137.9	137.4	135.8	133.9	127.3	125.0	122.7	118.3
6600	158.9	144.3	142.9	142.2	141.6	140.0	138.0	131.2	128.8	126.5	121.9
7000	163.6	148.5	147.0	146.3	145.7	144.1	142.0	135.0	132.5	130.1	125.4
7400	168.0	152.4	150.9	150.2	149.6	147.9	145.8	138.5	136.0	133.5	128.6
7800	172.4	156.3	154.8	154.0	153.4	151.6	149.4	142.0	139.4	136.8	131.8
8200	176.7	160.2	158.6	157.8	157.2	155.4	153.1	145.4	142.8	140.1	135.0
8600	180.0	164.0	162.3	161.5	160.8	159.0	156.7	148.8	146.1	143.4	138.1
9000	180.0	167.5	165.8	165.0	164.3	162.5	160.1	152.0	149.2	146.4	141.0
9400	180.0	170.8	169.1	168.2	167.5	165.6	163.2	154.9	152.1	149.2	143.7
9800	180.0	173.9	172.2	171.3	170.6	168.6	166.2	157.7	154.8	151.8	146.2
10200	180.0	177.2	175.4	174.5	173.8	171.8	169.2	160.6	157.6	154.6	148.8
10600	180.0	180.0	178.6	177.7	177.0	174.9	172.3	163.5	160.4	157.3	151.4
11000	180.0	180.0	180.0	180.0	180.0	178.1	175.4	166.3	163.2	160.1	154.0
11400	180.0	180.0	180.0	180.0	180.0	180.0	178.4	169.2	166.0	162.7	156.5
CLIMB LIMIT WT (1000 LB)	158.1	156.4	156.1	156.0	155.8	153.4	150.2	139.7	136.0	132.4	125.3

3000 FT Pressure Altitude

CORR'D FIELD LENGTH (FT)	FIELD LIMIT WEIGHT (1000 LB)										
	OAT										
	°F -40	60	70	75	79	82	86	100	105	110	120
	°C -40	16	21	24	26	28	30	38	41	43	49
4800	132.2	119.8	118.7	118.1	116.6	115.3	113.6	108.1	106.1	104.3	100.7
5000	135.1	122.4	121.2	120.6	119.1	117.7	116.1	110.4	108.4	106.6	102.9
5400	140.2	127.0	125.8	125.2	123.5	122.2	120.4	114.5	112.5	110.5	106.7
5800	145.2	131.5	130.2	129.6	127.9	126.5	124.7	118.5	116.4	114.4	110.4
6200	150.0	135.8	134.5	133.9	132.1	130.7	128.8	122.4	120.2	118.2	114.0
6600	154.7	140.0	138.7	138.0	136.2	134.7	132.7	126.2	123.9	121.8	117.5
7000	159.2	144.1	142.7	142.0	140.1	138.6	136.5	129.8	127.4	125.2	120.8
7400	163.5	147.9	146.5	145.8	143.8	142.2	140.1	133.2	130.7	128.5	123.9
7800	167.7	151.6	150.2	149.5	147.4	145.8	143.6	136.5	134.0	131.6	127.0
8200	171.9	155.4	153.9	153.1	151.1	149.4	147.2	139.8	137.2	134.8	130.0
8600	176.0	159.0	157.5	156.7	154.6	152.9	150.6	143.1	140.4	138.0	133.0
9000	179.8	162.5	160.9	160.1	157.9	156.1	153.8	146.1	143.4	140.9	135.8
9400	180.0	165.6	164.0	163.2	161.0	159.1	156.8	148.9	146.1	143.5	138.3
9800	180.0	168.6	167.0	166.2	163.9	162.0	159.6	151.5	148.7	146.0	140.7
10200	180.0	171.8	170.0	169.2	166.9	165.0	162.5	154.2	151.3	148.6	143.2
10600	180.0	174.9	173.2	172.4	170.0	168.0	165.5	157.0	154.0	151.2	145.7
11000	180.0	178.1	176.3	175.4	173.0	171.0	168.4	159.7	156.7	153.8	148.2
11400	180.0	180.0	179.3	178.4	175.9	173.9	171.2	162.4	159.3	156.4	150.6
CLIMB LIMIT WT (1000 LB)	154.9	153.4	153.1	152.9	150.0	147.7	144.6	134.5	130.8	127.4	120.5

Copyright © The Boeing Company. See title page for details.

Takeoff Obstacle Limit Weight
Flaps 5
Sea Level 86°F & Below, Zero Wind
Based on engine bleed for packs on and anti-ice off
Reference Obstacle Limit Weight (1000 LB)

OBSTACLE HEIGHT (FT)	DISTANCE FROM BRAKE RELEASE (1000 FT)								
	8	10	12	14	16	18	20	22	24
10	156.6	166.8	173.7						
50	143.4	155.6	163.4	168.3	171.9	174.5			
100	133.9	145.4	153.9	160.2	164.3	167.5	170.0	172.0	173.6
150	126.5	137.8	146.4	153.0	158.0	161.9	164.7	167.1	169.0
200	120.4	131.6	140.2	147.0	152.4	156.6	160.1	162.8	164.9
250	115.1	126.3	134.9	141.8	147.4	151.9	155.6	158.7	161.2
300	110.4	121.6	130.3	137.3	142.9	147.7	151.6	154.8	157.6
350	106.2	117.3	126.1	133.1	138.9	143.8	147.8	151.3	154.2
400	102.4	113.5	122.3	129.4	135.3	140.2	144.4	148.0	151.0
450	98.9	109.9	118.7	125.9	131.9	136.9	141.2	144.8	148.0
500	95.7	106.7	115.5	122.7	128.7	133.8	138.2	141.9	145.2
550	92.7	103.6	112.4	119.7	125.8	130.9	135.4	139.2	142.5
600		100.8	109.6	116.9	123.0	128.2	132.7	136.6	140.0
650		98.2	106.9	114.2	120.4	125.6	130.2	134.1	137.6
700		95.7	104.4	111.7	117.9	123.2	127.8	131.8	135.3
750		93.3	102.0	109.3	115.5	120.8	125.5	129.5	133.1
800		91.1	99.7	107.0	113.2	118.6	123.3	127.4	131.0
850			97.6	104.9	111.1	116.5	121.2	125.3	129.0
900			95.6	102.8	109.0	114.4	119.2	123.4	127.1
950			93.6	100.8	107.1	112.5	117.3	121.5	125.2
1000			91.8	99.0	105.2	110.6	115.4	119.6	123.4

Obstacle height must be calculated from lowest point of the runway to conservatively account for runway slope.

OAT Adjustments

OAT (°F)	REFERENCE OBSTACLE LIMIT WEIGHT (1000 LB)							
	100	110	120	130	140	150	160	170
86 & BELOW	0	0	0	0	0	0	0	0
90	-1.8	-2.0	-2.2	-2.4	-2.6	-2.9	-3.1	-3.3
95	-4.0	-4.5	-5.0	-5.5	-6.0	-6.4	-6.9	-7.4
100	-6.3	-7.0	-7.8	-8.5	-9.3	-10.0	-10.8	-11.5
105	-8.4	-9.4	-10.4	-11.4	-12.4	-13.5	-14.5	-15.5
110	-10.5	-11.8	-13.1	-14.4	-15.6	-16.9	-18.2	-19.5
115	-12.6	-14.2	-15.7	-17.3	-18.9	-20.4	-22.0	-23.6
120	-14.7	-16.6	-18.4	-20.2	-22.1	-23.9	-25.8	-27.6

Pressure Altitude Adjustments

ALT (FT)	OAT ADJUSTED OBSTACLE LIMIT WEIGHT (1000 LB)							
	100	110	120	130	140	150	160	170
S.L.& BELOW	0	0	0	0	0	0	0	0
1000	-3.8	-4.1	-4.5	-4.9	-5.2	-5.6	-5.9	-6.3
2000	-7.6	-8.3	-9.0	-9.7	-10.4	-11.1	-11.8	-12.6
3000	-11.0	-12.1	-13.2	-14.2	-15.3	-16.3	-17.4	-18.5
4000	-14.5	-15.9	-17.3	-18.7	-20.1	-21.5	-23.0	-24.4
5000	-17.9	-19.6	-21.4	-23.1	-24.8	-26.6	-28.3	-30.1
6000	-21.3	-23.3	-25.4	-27.5	-29.5	-31.6	-33.7	-35.8
7000	-24.5	-26.9	-29.3	-31.7	-34.1	-36.5	-38.9	-41.3
8000	-27.7	-30.5	-33.2	-35.9	-38.7	-41.4	-44.1	-46.9
9000	-30.6	-33.6	-36.7	-39.7	-42.8	-45.8	-48.9	-51.9
10000	-33.4	-36.8	-40.1	-43.5	-46.9	-50.3	-53.7	-57.0

Copyright © The Boeing Company. See title page for details.

Takeoff Obstacle Limit Weight

Flaps 5

Sea Level 86°F & Below, Zero Wind

Based on engine bleed for packs on and anti-ice off

Wind Adjustments

WIND (KTS)	OAT & ALT ADJUSTED OBSTACLE LIMIT WEIGHT (1000 LB)							
	100	110	120	130	140	150	160	170
15 TW	-18.7	-18.1	-17.4	-16.7	-16.1	-15.4	-14.7	-14.1
10 TW	-12.5	-12.0	-11.6	-11.1	-10.7	-10.3	-9.8	-9.4
5 TW	-6.2	-6.0	-5.8	-5.6	-5.4	-5.1	-4.9	-4.7
0	0	0	0	0	0	0	0	0
10 HW	2.2	2.0	1.9	1.7	1.5	1.4	1.2	1.0
20 HW	4.4	4.1	3.7	3.4	3.1	2.7	2.4	2.0
30 HW	6.7	6.2	5.7	5.2	4.6	4.1	3.6	3.1
40 HW	9.0	8.3	7.6	6.9	6.2	5.5	4.8	4.1

With engine bleed for packs off, increase weight by 1900 lb.
With engine anti-ice on, decrease weight by 400 lb.
With engine and wing anti-ice on, decrease weight by 2000 lb (optional system).

Copyright © The Boeing Company. See title page for details.

Long Range Cruise Maximum Operating Altitude

Max Cruise Thrust

ISA + 10°C and Below

WEIGHT (1000 LB)	OPTIMUM ALT (FT)	TAT (°C)	MARGIN TO INITIAL BUFFET 'G' (BANK ANGLE)				
			1.20 (33°)	1.25 (36°)	1.30 (39°)	1.40 (44°)	1.50 (48°)
170	31800	-9	35300*	35300*	35300*	34300	32900
160	33100	-12	36600*	36600*	36600*	35500	34200
150	34500	-15	37900*	37900*	37900*	36900	35500
140	36000	-19	39200*	39200*	39200*	38300	37000
130	37500	-19	40600*	40600*	40600*	39900	38500
120	39200	-19	41000	41000	41000	41000	40200
110	41000	-19	41000	41000	41000	41000	41000
100	41000	-19	41000	41000	41000	41000	41000
90	41000	-19	41000	41000	41000	41000	41000
80	41000	-19	41000	41000	41000	41000	41000

ISA + 15°C

WEIGHT (1000 LB)	OPTIMUM ALT (FT)	TAT (°C)	MARGIN TO INITIAL BUFFET 'G' (BANK ANGLE)				
			1.20 (33°)	1.25 (36°)	1.30 (39°)	1.40 (44°)	1.50 (48°)
170	31800	-4	34100*	34100*	34100*	34100*	32900
160	33100	-7	35700*	35700*	35700*	35500	34200
150	34500	-10	37000*	37000*	37000*	36900	35500
140	36000	-13	38300*	38300*	38300*	38300	37000
130	37500	-13	39700*	39700*	39700*	39700*	38500
120	39200	-13	41000	41000	41000	41000	40200
110	41000	-13	41000	41000	41000	41000	41000
100	41000	-13	41000	41000	41000	41000	41000
90	41000	-13	41000	41000	41000	41000	41000
80	41000	-13	41000	41000	41000	41000	41000

ISA + 20°C

WEIGHT (1000 LB)	OPTIMUM ALT (FT)	TAT (°C)	MARGIN TO INITIAL BUFFET 'G' (BANK ANGLE)				
			1.20 (33°)	1.25 (36°)	1.30 (39°)	1.40 (44°)	1.50 (48°)
170	31800	2	32300*	32300*	32300*	32300*	32300*
160	33100	-1	34200*	34200*	34200*	34200*	34200
150	34500	-4	35800*	35800*	35800*	35800*	35500
140	36000	-7	37200*	37200*	37200*	37200*	37000
130	37500	-8	38600*	38600*	38600*	38600*	38500
120	39200	-8	40000*	40000*	40000*	40000*	40000*
110	41000	-8	41000	41000	41000	41000	41000
100	41000	-8	41000	41000	41000	41000	41000
90	41000	-8	41000	41000	41000	41000	41000
80	41000	-8	41000	41000	41000	41000	41000

***Denotes altitude thrust limited in level flight, 100 fpm residual rate of climb.**

Copyright © The Boeing Company. See title page for details.

Long Range Cruise Trip Fuel and Time

Ground to Air Miles Conversion

AIR DISTANCE (NM)					GROUND DISTANCE (NM)	AIR DISTANCE (NM)				
HEADWIND COMPONENT (KTS)						TAILWIND COMPONENT (KTS)				
100	80	60	40	20		20	40	60	80	100
278	258	240	225	212	200	190	181	173	166	159
552	514	480	450	424	400	381	364	348	334	322
825	769	718	674	635	600	573	548	525	503	484
1098	1023	956	898	846	800	764	731	700	672	647
1370	1277	1194	1122	1058	1000	956	914	876	842	810
1641	1531	1432	1345	1269	1200	1147	1098	1052	1011	973
1911	1783	1669	1569	1480	1400	1338	1281	1228	1180	1136
2180	2036	1905	1792	1691	1600	1530	1464	1404	1349	1299
2449	2287	2142	2015	1902	1800	1721	1648	1580	1518	1462
2717	2539	2378	2238	2113	2000	1913	1831	1756	1688	1625
2985	2790	2614	2460	2324	2200	2104	2015	1932	1857	1788
3251	3040	2849	2682	2535	2400	2295	2198	2108	2026	1952
3518	3290	3084	2905	2745	2600	2487	2382	2285	2196	2115
3783	3539	3319	3127	2956	2800	2678	2565	2461	2365	2278
4048	3788	3554	3349	3166	3000	2870	2749	2637	2535	2442
4312	4037	3788	3570	3376	3200	3062	2933	2814	2705	2606
4575	4285	4022	3792	3587	3400	3253	3117	2991	2875	2770
4838	4532	4256	4013	3797	3600	3445	3301	3167	3045	2933
5100	4780	4489	4234	4007	3800	3637	3485	3344	3215	3097
5362	5026	4722	4455	4217	4000	3828	3668	3521	3385	3261
5623	5272	4955	4676	4427	4200	4020	3852	3697	3555	3425
5883	5518	5187	4896	4637	4400	4211	4036	3874	3725	3589
6143	5764	5419	5117	4847	4600	4403	4220	4050	3894	3752
6402	6008	5651	5337	5056	4800	4594	4403	4227	4064	3916
6661	6253	5883	5557	5266	5000	4786	4587	4403	4234	4080

Copyright © The Boeing Company. See title page for details.

Long Range Cruise Trip Fuel and Time

Reference Fuel and Time Required

AIR DIST (NM)	PRESSURE ALTITUDE (1000 FT)									
	29		31		33		35		37	
	FUEL (1000 LB)	TIME (HR:MIN)	FUEL (1000 LB)	TIME (HR:MIN)	FUEL (1000 LB)	TIME (HR:MIN)	FUEL (1000 LB)	TIME (HR:MIN)	FUEL (1000 LB)	TIME (HR:MIN)
200	3.3	0:38	3.3	0:37	3.3	0:37	3.3	0:37	3.3	0:37
400	5.5	1:09	5.5	1:07	5.4	1:06	5.3	1:05	5.3	1:04
600	7.8	1:39	7.7	1:37	7.5	1:35	7.4	1:33	7.3	1:32
800	10.1	2:10	9.9	2:07	9.7	2:04	9.5	2:01	9.3	2:00
1000	12.4	2:40	12.1	2:36	11.8	2:32	11.6	2:29	11.4	2:27
1200	14.7	3:09	14.4	3:05	14.1	3:00	13.7	2:57	13.5	2:54
1400	17.1	3:39	16.7	3:33	16.3	3:28	15.9	3:24	15.6	3:22
1600	19.5	4:08	19.0	4:02	18.5	3:56	18.1	3:52	17.7	3:49
1800	21.9	4:38	21.3	4:31	20.8	4:24	20.2	4:20	19.9	4:16
2000	24.3	5:07	23.6	4:59	23.0	4:52	22.4	4:47	22.0	4:43
2200	26.8	5:36	26.1	5:27	25.4	5:19	24.7	5:14	24.2	5:10
2400	29.3	6:04	28.5	5:55	27.7	5:47	27.0	5:42	26.5	5:37
2600	31.8	6:32	30.9	6:23	30.1	6:14	29.3	6:09	28.8	6:04
2800	34.3	7:01	33.3	6:50	32.4	6:42	31.6	6:36	31.1	6:31
3000	36.8	7:29	35.8	7:18	34.8	7:09	33.8	7:03	33.3	6:58
3200	39.4	7:57	38.3	7:45	37.2	7:36	36.3	7:30	35.8	7:24
3400	42.1	8:24	40.9	8:12	39.7	8:03	38.7	7:57	38.3	7:51
3600	44.7	8:52	43.4	8:40	42.2	8:30	41.1	8:23	40.7	8:17
3800	47.3	9:19	46.0	9:07	44.7	8:57	43.6	8:50	43.2	8:44
4000	49.9	9:47	48.5	9:34	47.2	9:24	46.0	9:17	45.7	9:11
4200	52.7	10:13	51.2	10:01	49.8	9:50	48.7	9:43	48.1	9:37
4400	55.5	10:40	53.9	10:27	52.4	10:17	51.3	10:10	50.6	10:04
4600	58.3	11:07	56.6	10:54	55.1	10:43	54.0	10:36	53.1	10:30
4800	61.0	11:34	59.3	11:21	57.7	11:10	56.6	11:03	55.6	10:57
5000	63.8	12:01	62.0	11:48	60.4	11:37	59.3	11:29	58.0	11:24

Fuel Required Adjustments (1000 LB)

REFERENCE FUEL REQUIRED (1000 LB)	LANDING WEIGHT (1000 LB)					
	80	90	100	110	120	130
10	-1.2	-0.8	-0.4	0.0	0.6	1.2
20	-2.3	-1.6	-0.8	0.0	1.3	2.8
30	-3.6	-2.5	-1.3	0.0	2.1	4.6
40	-4.8	-3.3	-1.7	0.0	3.1	6.8
50	-6.1	-4.2	-2.1	0.0	4.3	9.2
60	-7.4	-5.1	-2.6	0.0	5.6	12.0

Based on 280/.78 climb, Long Range Cruise and .78/280/250 descent.

Copyright © The Boeing Company. See title page for details.

Long Range Cruise Step Climb

Ground to Air Miles Conversion

AIR DISTANCE (NM)					GROUND DISTANCE (NM)	AIR DISTANCE (NM)				
HEADWIND COMPONENT (KTS)						TAILWIND COMPONENT (KTS)				
100	80	60	40	20		20	40	60	80	100
1326	1245	1173	1109	1052	1000	953	910	871	836	803
1845	1735	1637	1549	1471	1400	1336	1277	1223	1174	1128
2363	2224	2100	1990	1890	1800	1718	1643	1575	1512	1454
2880	2712	2563	2429	2309	2200	2101	2010	1927	1850	1780
3396	3200	3026	2869	2728	2600	2484	2377	2279	2189	2106
3912	3688	3488	3309	3147	3000	2866	2744	2632	2528	2433
4427	4175	3950	3748	3565	3400	3249	3111	2984	2868	2760
4942	4662	4412	4187	3984	3800	3632	3478	3337	3207	3087
5456	5148	4873	4626	4403	4200	4015	3846	3690	3547	3414
5970	5635	5335	5065	4821	4600	4398	4213	4043	3886	3741
6484	6121	5796	5504	5240	5000	4781	4581	4396	4226	4069

Trip Fuel and Time Required

AIR DIST (NM)	TRIP FUEL (1000 LB)					TIME (HRS:MIN)
	LANDING WEIGHT (1000 LB)					
	90	100	110	120	130	
1000	9.8	10.4	11.2	12.0	12.7	2:25
1400	13.3	14.2	15.3	16.4	17.4	3:20
1800	17.0	18.1	19.6	21.0	22.3	4:14
2200	20.7	22.2	23.9	25.6	27.3	5:08
2600	24.5	26.3	28.4	30.5	32.5	6:01
3000	28.4	30.6	33.0	35.4	37.8	6:55
3400	32.5	35.0	37.8	40.5	43.3	7:49
3800	36.6	39.5	42.7	45.8	49.0	8:42
4200	40.9	44.2	47.7	51.3	54.8	9:36
4600	45.3	49.0	52.9	56.8	60.8	10:29
5000	49.8	53.9	58.2	62.6	67.0	11:22

Based on 280/.78 climb, LRC or .78 cruise and .78/280/250 descent.
Valid for all pressure altitudes with 4000 ft step climb to 2000 ft above optimum altitude.

Copyright © The Boeing Company. See title page for details.

Short Trip Fuel and Time

Ground to Air Miles Conversion

AIR DISTANCE (NM) HEADWIND COMPONENT (KTS)					GROUND DISTANCE (NM)	AIR DISTANCE (NM) TAILWIND COMPONENT (KTS)				
100	80	60	40	20		20	40	60	80	100
94	80	70	62	55	50	46	42	39	36	34
159	142	129	117	108	100	93	87	82	77	73
224	204	187	173	161	150	141	132	125	119	113
289	265	245	228	213	200	188	178	169	161	153
353	326	303	283	265	250	236	224	213	203	194
416	386	360	338	318	300	284	270	257	245	235
480	447	418	393	370	350	332	316	301	288	275
544	508	476	447	422	400	380	362	345	330	316
610	569	534	503	475	450	428	407	389	372	357
676	632	593	558	528	500	475	453	432	414	397

Trip Fuel and Time Required

AIR DIST (NM)		LANDING WEIGHT (1000 LB)					TIME (HRS:MIN)
		90	100	110	120	130	
50	FUEL (1000 LB)	1.1	1.2	1.3	1.3	1.4	0:14
	ALT (FT)	11000	11000	11000	11000	9000	
100	FUEL (1000 LB)	1.8	1.9	2.0	2.1	2.2	0:22
	ALT (FT)	19000	19000	19000	19000	21000	
150	FUEL (1000 LB)	2.4	2.5	2.6	2.7	2.9	0:30
	ALT (FT)	27000	25000	25000	25000	23000	
200	FUEL(1000 LB)	2.9	3.0	3.2	3.4	3.5	0:37
	ALT (FT)	31000	31000	29000	29000	27000	
250	FUEL (1000 LB)	3.3	3.5	3.7	3.9	4.1	0:43
	ALT (FT)	41000	37000	37000	35000	33000	
300	FUEL (1000 LB)	3.7	4.0	4.2	4.4	4.7	0:50
	ALT (FT)	41000	39000	39000	37000	35000	
350	FUEL (1000 LB)	4.2	4.4	4.7	5.0	5.2	0:56
	ALT (FT)	41000	39000	39000	37000	35000	
400	FUEL (1000 LB)	4.6	4.9	5.2	5.5	5.8	1:03
	ALT (FT)	41000	41000	39000	37000	37000	
450	FUEL (1000 LB)	5.0	5.3	5.7	6.0	6.4	1:10
	ALT (FT)	41000	41000	39000	37000	37000	
500	FUEL (1000 LB)	5.4	5.8	6.2	6.5	6.9	1:17
	ALT (FT)	41000	41000	39000	39000	37000	

Holding Planning

Flaps Up

WEIGHT (1000 LB)	TOTAL FUEL FLOW (LB/HR) PRESSURE ALTITUDE (FT)								
	1500	5000	10000	15000	20000	25000	30000	35000	41000
170	6160	6060	6010	5990	5870	5880	6020	6470	
160	5830	5730	5670	5640	5530	5510	5630	5890	
150	5500	5400	5340	5290	5200	5140	5250	5400	
140	5170	5080	5010	4950	4880	4770	4870	4970	
130	4850	4750	4680	4610	4540	4420	4500	4570	5200
120	4530	4420	4350	4280	4210	4100	4130	4190	4560
110	4210	4100	4020	3950	3880	3790	3770	3860	4100
100	3900	3780	3690	3680	3600	3540	3490	3510	3680
90	3670	3550	3430	3350	3280	3220	3190	3150	3290
80	3360	3250	3120	3030	2970	2910	2880	2820	2910
70	3060	2950	2830	2730	2670	2620	2570	2530	2570

This table includes 5% additional fuel for holding in a racetrack pattern.

Copyright © The Boeing Company. See title page for details.

Crew Oxygen Requirements

Required Pressure (PSI) for 76 Cu. Ft. Cylinder

BOTTLE TEMPERATURE		NUMBER OF CREW USING OXYGEN		
°F	°C	2	3	4
122	50	735	1055	1360
113	45	725	1040	1340
104	40	715	1020	1320
92	35	700	1005	1300
86	30	690	990	1280
77	25	680	975	1255
68	20	670	960	1240
59	15	655	940	1215
50	10	645	925	1195
41	5	635	910	1175
32	0	620	890	1150
23	-5	610	875	1130
14	-10	600	860	1110

Required Pressure (PSI) for 114/115 Cu. Ft. Cylinder

BOTTLE TEMPERATURE		NUMBER OF CREW USING OXYGEN		
°F	°C	2	3	4
122	50	530	735	945
113	45	520	725	930
104	40	510	715	915
92	35	505	700	900
86	30	495	690	885
77	25	485	680	870
68	20	480	670	860
59	15	470	655	840
50	10	460	645	830
41	5	455	635	815
32	0	445	620	800
23	-5	440	610	785
14	-10	430	600	770

Copyright © The Boeing Company. See title page for details.

ENGINE INOP

MAX CONTINUOUS THRUST

Net Level Off Weight

PRESSURE ALTITUDE (1000 FT)	LEVEL OFF WEIGHT (1000 LB)		
	ISA + 10°C & BELOW	ISA + 15°C	ISA + 20°C
30	95.9	93.3	
28	104.3	101.2	97.9
26	113.3	109.8	106.5
24	122.1	118.2	114.4
22	130.3	126.1	121.9
20	139.1	134.3	129.2
18	147.7	142.6	136.7
16	157.0	151.0	144.4
14	166.0	159.4	152.1
12	174.2	166.7	158.3
10	179.9	173.1	164.5

Anti-Ice Adjustments

ANTI-ICE CONFIGURATION	LEVEL OFF WEIGHT ADJUSTMENT (1000 LB)								
	PRESSURE ALTITUDE (1000 FT)								
	12	14	16	18	20	22	24	26	28
ENGINE ONLY	-5.5	-5.5	-4.6	-4.2	-3.5	-3.1	-2.9	-2.6	-2.4
ENGINE & WING	-18.7	-16.5	-15.9	-15.7	-14.3	-12.3	-10.8	-10.1	-9.5

Copyright © The Boeing Company. See title page for details.

ALL ENGINES

Long Range Cruise Critical Fuel Reserves

Ground to Air Miles Conversion

AIR DISTANCE (NM) HEADWIND COMPONENT (KTS)					GROUND DISTANCE (NM)	AIR DISTANCE (NM) TAILWIND COMPONENT (KTS)				
100	80	60	40	20		20	40	60	80	100
290	266	246	228	213	200	188	178	169	160	153
593	541	497	460	428	400	376	354	335	317	302
897	816	749	692	643	600	563	530	501	474	451
1201	1091	1000	923	857	800	750	706	667	631	600
1505	1367	1252	1155	1072	1000	937	882	832	788	749
1809	1642	1504	1387	1287	1200	1124	1058	998	945	898
2113	1917	1755	1618	1501	1400	1312	1234	1164	1102	1047
2417	2193	2007	1850	1716	1600	1499	1409	1330	1260	1196
2721	2468	2259	2082	1931	1800	1686	1585	1496	1417	1345

Critical Fuel (1000 LB)

AIR DIST (NM)	WEIGHT AT CRITICAL POINT (1000 LB)								
	90	100	110	120	130	140	150	160	170
200	4.0	4.1	4.2	4.4	4.5	4.7	4.8	5.0	5.1
300	5.5	5.7	5.9	6.1	6.3	6.5	6.7	6.9	7.1
400	7.1	7.4	7.6	7.9	8.1	8.4	8.6	8.9	9.2
500	8.7	9.0	9.3	9.6	9.9	10.2	10.5	10.8	11.2
600	10.3	10.6	11.0	11.3	11.7	12.1	12.4	12.8	13.2
700	11.8	12.2	12.6	13.1	13.5	13.9	14.3	14.7	15.1
800	13.4	13.8	14.3	14.7	15.2	15.6	16.1	16.6	17.1
900	15.0	15.4	15.9	16.4	16.9	17.4	17.9	18.5	19.0
1000	16.5	17.0	17.5	18.1	18.7	19.2	19.8	20.4	21.0
1100	18.1	18.5	19.2	19.8	20.4	21.0	21.6	22.3	22.9
1200	19.7	20.1	20.8	21.5	22.2	22.8	23.4	24.1	24.8
1300	21.3	21.7	22.4	23.1	23.9	24.5	25.2	25.9	26.7
1400	22.8	23.2	24.0	24.8	25.5	26.3	27.0	27.8	28.6
1500	24.4	24.8	25.5	26.4	27.2	28.0	28.8	29.6	30.5
1600	26.0	26.4	27.1	28.0	28.9	29.8	30.6	31.5	32.4
1700	27.5	28.0	28.7	29.7	30.6	31.5	32.4	33.3	34.2
1800	29.1	29.5	30.3	31.3	32.3	33.2	34.1	35.1	36.1

Based on: Emergency descent to 10000 ft. Level cruise at 10000 ft. 250 KIAS descent to 1500 ft. 15 minute hold at 1500 ft. One missed approach; approach and land. 5% allowance for wind errors.
Increase fuel required 0.5% for each 10°C hotter than ISA conditions.
If icing conditions exists, increase fuel by 16% to account for engine and wing anti-ice on and ice accumulation on unheated surfaces.
Allowance for performance deterioration not included.
Compare the fuel required from this chart with critical fuel reserves for one engine inoperative and use the higher of the two.

Copyright © The Boeing Company. See title page for details.

ENGINE INOP

Long Range Cruise Critical Fuel Reserves

Ground to Air Miles Conversion

AIR DISTANCE (NM) HEADWIND COMPONENT (KTS)					GROUND DISTANCE (NM)	AIR DISTANCE (NM) TAILWIND COMPONENT (KTS)				
100	80	60	40	20		20	40	60	80	100
295	269	248	230	214	200	188	177	168	159	151
604	548	502	463	429	400	375	352	333	315	299
914	827	756	696	644	600	561	528	497	471	447
1224	1106	1010	929	860	800	748	703	662	627	594
1533	1385	1264	1162	1075	1000	935	878	827	782	742
1843	1665	1518	1395	1290	1200	1122	1053	992	938	890
2153	1944	1772	1628	1505	1400	1309	1228	1157	1094	1037
2462	2223	2026	1861	1721	1600	1495	1403	1322	1250	1185
2772	2502	2280	2094	1936	1800	1682	1579	1487	1406	1333

Critical Fuel (1000 LB)

AIR DIST (NM)	WEIGHT AT CRITICAL POINT (1000 LB)								
	90	100	110	120	130	140	150	160	170
200	3.5	3.6	3.8	3.9	4.1	4.3	4.4	4.6	4.8
300	4.9	5.1	5.3	5.5	5.7	6.0	6.2	6.4	6.6
400	6.3	6.5	6.8	7.1	7.4	7.7	8.0	8.2	8.5
500	7.6	8.0	8.3	8.7	9.0	9.4	9.7	10.1	10.4
600	9.0	9.4	9.8	10.2	10.6	11.1	11.5	11.9	12.3
700	10.4	10.9	11.3	11.8	12.3	12.7	13.2	13.7	14.1
800	11.8	12.3	12.8	13.3	13.8	14.4	14.9	15.4	16.0
900	13.2	13.7	14.2	14.8	15.4	16.0	16.6	17.2	17.8
1000	14.6	15.1	15.7	16.3	17.0	17.6	18.3	18.9	19.6
1100	16.0	16.5	17.1	17.8	18.5	19.3	20.0	20.7	21.4
1200	17.3	17.8	18.6	19.3	20.1	20.9	21.7	22.5	23.2
1300	18.7	19.2	20.0	20.8	21.7	22.5	23.3	24.2	25.0
1400	20.1	20.6	21.5	22.3	23.2	24.1	25.0	25.9	26.7
1500	21.5	22.0	22.9	23.8	24.7	25.7	26.6	27.6	28.5
1600	22.9	23.4	24.3	25.2	26.2	27.2	28.2	29.3	30.3
1700	24.3	24.8	25.7	26.7	27.7	28.8	29.9	31.0	32.0
1800	25.7	26.2	27.0	28.1	29.2	30.4	31.5	32.6	33.7

Based on: Emergency descent to 10000 ft. Level cruise at 10000 ft. 250 KIAS descent to 1500 ft. 15 minutes hold at 1500 ft. One missed approach; approach and land. 5% allowance for wind errors.
Increase fuel required 0.5% for each 10°C hotter than ISA conditions.
If icing conditions exists, increase fuel by 15% to account for engine and wing anti-ice on and ice accumulation on unheated surfaces.
Allowance for performance deterioration not included.
Compare the fuel required from this chart with critical fuel reserves for all engines operative and use the higher of the two.

Copyright © The Boeing Company. See title page for details.

Intentionally
Blank

Copyright © The Boeing Company. See title page for details.

Landing Field Limit Weight
Flaps 40
Wind Corrected Field Length (FT)

FIELD LENGTH AVAILABLE (FT)	WIND COMPONENT (KTS)							
	-15	-10	-5	0	10	20	30	40
3000			2670	3000	3220	3440	3680	3910
3400		2720	3060	3400	3630	3870	4110	4360
3800	2750	3090	3440	3800	4040	4290	4540	4800
4200	3110	3470	3830	4200	4450	4710	4970	5240
4600	3480	3840	4210	4600	4860	5130	5410	5690
5000	3840	4210	4600	5000	5270	5550	5840	6130
5400	4200	4590	4990	5400	5680	5970	6270	6570
5800	4560	4960	5370	5800	6090	6390	6700	7020
6200	4920	5330	5760	6200	6500	6810	7130	7460
6600	5280	5710	6140	6600	6910	7230	7560	7900
7000	5640	6080	6530	7000	7320	7650	7990	8350
7400	6000	6450	6910	7400	7730	8070	8420	
7800	6360	6830	7300	7800	8140	8490		
8200	6720	7200	7690	8200	8550			

Field Limit Weight (1000 LB)

WIND CORR'D FIELD LENGTH (FT)	AIRPORT PRESSURE ALTITUDE (FT)							
	0		1000		2000		3000	
	DRY	WET	DRY	WET	DRY	WET	DRY	WET
3800	92.6		89.8		87.0			
4200	106.2	87.6	103.0	85.0	99.9		96.9	
4600	120.0	99.4	116.5	96.4	112.9	93.4	109.5	90.6
5000	134.0	111.3	130.1	108.0	126.2	104.7	122.4	101.5
5400	147.4	123.4	143.3	119.7	139.2	116.1	135.1	112.6
5800	158.9	135.5	154.8	131.6	150.8	127.6	146.9	123.8
6200	170.4	147.1	165.9	143.0	161.4	138.9	157.3	134.8
6600	180.0	157.1	176.4	153.2	172.1	149.2	167.6	145.1
7000		167.1		162.8	180.0	158.4	177.4	154.4
7400		176.5		172.1		167.8		163.4

Decrease field limit weight 1000 lb when using manual speedbrakes.

Copyright © The Boeing Company. See title page for details.

Landing Climb Limit Weight

Valid for approach with Flaps 15 and landing with Flaps 30 or 40

Based on engine bleed for packs on and anti-ice off

AIRPORT OAT		LANDING CLIMB LIMIT WEIGHT (1000 LB)			
		AIRPORT PRESSURE ALTITUDE (FT)			
°F	°C	0	1000	2000	3000
120	49	136.7	131.7	126.8	
115	46	140.5	135.5	130.3	125.4
110	43	144.2	139.0	133.8	128.8
105	41	148.1	142.6	137.3	132.2
100	38	152.2	146.5	141.0	135.7
95	35	156.1	150.5	144.7	139.3
90	32	160.2	154.4	148.6	142.9
85	29	163.7	158.4	152.6	146.7
80	27	163.9	160.7	156.6	150.6
75	24	164.1	160.9	157.7	154.4
70	21	164.3	161.1	157.9	154.6
65	18	164.5	161.2	158.0	154.7
60	16	164.6	161.4	158.2	154.9
55	13	164.8	161.6	158.3	155.0
50	10	165.0	161.7	158.5	155.2
-40	-40	166.3	163.1	159.9	156.6

With engine bleed for packs off, increase weight by 2800 lb.
With engine anti-ice on, decrease allowable weight by 500 lb.
With engine and wing anti-ice on, decrease weight by 2700 lb.
When operating in icing conditions during any part of the flight with forecast landing temperature below 10°C, decrease weight by 13800 lb.

Copyright © The Boeing Company. See title page for details.

Quick Turnaround Limit Weight
Flaps 40

AIRPORT OAT		LIMIT WEIGHT (1000 LB)			
		AIRPORT PRESSURE ALTITUDE (FT)			
°F	°C	0	1000	2000	3000
120	49	160.0	156.7	153.5	
100	38	163.2	159.8	156.5	153.3
80	27	166.5	163.0	159.6	156.3
60	16	169.9	166.4	162.9	159.5
40	4	173.4	170.0	166.4	162.9
20	-7	177.0	173.6	170.1	166.5
0	-18	180.0	177.2	173.8	170.4
-20	-29	180.0	180.0	177.7	174.3
-40	-40	180.0	180.0	180.0	178.3

Increase weight by 1600 lb per 1% uphill slope. Decrease weight by 2400 lb per 1% downhill slope. Increase weight by 4100 lb per 10 knots headwind. Decrease weight by 17000 lb per 10 knots tailwind.

After landing at weights exceeding those shown above, adjusted for slope and wind, wait at least 62 minutes and check that wheel thermal plugs have not melted before executing a takeoff.

As an alternate procedure, ensure that each brake pressure plate temperature, without artificial cooling, is less than 425°F as follows: No sooner than 10 and no later than 15 minutes after parking, measure each brake pressure plate surface temperature at a minimum of two points per brake by an accurate method (using a Doric Microtemp 450 hand held thermometer or equivalent, hold temperature probe in place for 20 seconds or until reading stabilizes). If each measured temperature is less than 425°F, immediate dispatch is allowed; otherwise the required minimum ground wait period of 62 minutes applies.

Copyright © The Boeing Company. See title page for details.

Intentionally
Blank

Copyright © The Boeing Company. See title page for details.

Introduction

This chapter contains self dispatch performance data intended primarily for use by flight crews in the event that information cannot be obtained from the airline dispatch office. The takeoff data provided is for a single takeoff flap at max takeoff thrust. The range of conditions covered is limited to those normally encountered in airline operation. In the event of conflict between the data presented in this chapter and that contained in the approved Airplane Flight Manual, the Flight Manual shall always take precedence.

Takeoff

The maximum allowable takeoff weight will be the least of the Field, Climb and Obstacle Limit Weights as determined from the tables shown. Tire and Brake Energy Limits are not shown as they are not limiting for the range of conditions shown in this chapter.

Field Limit Weight - Slope and Wind Corrections

These tables for dry and wet runways provide corrections to the field length available for the effects of runway slope and wind component along the runway. Enter the appropriate table with the available field length and runway slope to determine the slope corrected field length. Next enter the appropriate table with slope corrected field length and wind component to determine the slope and wind corrected field length.

Field and Climb Limit Weight

Tables are presented for selected airport pressure altitudes and runway conditions and show both Field and Climb Limit Weights. Enter the appropriate table for pressure altitude and runway condition with “Slope and Wind Corrected Field Length” determined above and airport OAT to obtain Field Limit Weight. Also read Climb Limit Weight for the same OAT. Intermediate altitudes may be interpolated or use next higher altitude. When finding a maximum weight for a wet runway, the dry runway limit weight must also be determined and the lower of the two weights used.

Copyright © The Boeing Company. See title page for details.

Obstacle Limit Weight

The Reference Obstacle Limit Weight table provides obstacle limit weights for reference airport conditions based on obstacle height above the runway surface and distance from brake release. Enter the adjustment tables to adjust the reference Obstacle Limit Weight for the effects of OAT, pressure altitude and wind as indicated. In the case of multiple obstacles, enter the tables successively with each obstacle and determine the most limiting weight.

Enroute

Long Range Cruise Maximum Operating Altitude

These tables provide the maximum operating altitude in the same manner as the FMC. Maximum altitudes are shown for a given cruise weight and maneuver capability. Note that this table considers both thrust and buffet limits, providing the more limiting of the two. Any data that is thrust limited is denoted by an asterisk and represents only a thrust limited condition in level flight with 100 ft/min residual rate of climb. Flying above these altitudes with sustained banks in excess of approximately 15° may cause the airplane to lose speed and/or altitude. The altitudes shown in the table are limited to the maximum certified altitude of 41000 ft.

Long Range Cruise Trip Fuel and Time

Long Range Cruise Trip Fuel and Time tables are provided to determine trip time and fuel required to destination.

To determine trip fuel and time for a constant altitude cruise, first enter the Ground to Air Miles Conversion table to convert ground distance and enroute wind to an equivalent still air distance for use with the Reference Fuel and Time tables. Next, enter the Reference Fuel and Time table with air distance from the Ground to Air Miles Conversion table and the desired altitude and read Reference Fuel and Time Required. Lastly, enter the Fuel Required Adjustment table with the Reference Fuel and the planned landing weight to obtain the adjustment to the fuel required at the planned landing weight.

Long Range Cruise Step Climb Trip Fuel and Time

The Long Range Cruise Step Climb Trip Fuel and Time tables are provided to determine trip time and fuel required to destination when flying a step climb profile. Step climb profiles are based on 4000 ft step climbs to keep the flight within 2000 ft of the optimum altitude for the current cruise weight. To determine trip fuel and time, enter the Ground to Air Miles

Copyright © The Boeing Company. See title page for details.

Conversion table and determine air distance as discussed above. Then enter the Trip Fuel and Time Required table with air distance and planned landing weight to read trip fuel. Continue across the table to read trip time.

Short Trip Fuel and Time

These tables are provided to determine trip fuel and time for short distances or alternates. Obtain air distance from the table using the ground distance and wind component to the alternate. Enter the Trip Fuel and Time Required table with air distance and read trip fuel required for the expected landing weight, together with time to alternate at right. For distances greater than shown or other altitudes, use the Long Range Cruise Trip Fuel and Time tables.

Holding Planning

This table provides total fuel flow information necessary for planning flaps up holding and reserve fuel requirements. Data is based on the FMC holding speed schedule which is the higher of the maximum endurance and flaps up maneuver speeds. As noted, the fuel flow is based on flight in a racetrack holding pattern. For holding in straight and level flight, reduce table values by 5%.

Crew Oxygen Requirements

Tables are provided to determine the minimum dispatch oxygen pressure for protective breathing equipment used by the flight crew. Enter the number of crew plus observers using oxygen and read the minimum cylinder pressure required for the appropriate bottle temperature and size. These pressures provide sufficient oxygen for 15 minutes of protective breathing for each flight crew member plus 10% contingency at 8000 ft cabin pressure altitude. Route specific analysis is necessary to determine if additional oxygen pressure is needed to meet supplemental oxygen requirements.

Net Level Off Weight

The Net Level Off Weight table is provided to determine terrain clearance capability in straight and level flight following an engine failure. Regulations require terrain clearance planning based on net performance which is the gross (or actual) gradient performance degraded by 1.1%. In addition, the net level off pressure altitude must clear the terrain by 1000 ft.

To determine the maximum weight for terrain clearance, enter the table with required net level off pressure altitude and expected ISA deviation to obtain weight. Adjust weight for anti-ice operation as noted below the table.

Copyright © The Boeing Company. See title page for details.

Extended Range Operations

Regulations require that flights conducted over a route that contains a point further than one hour's time at "normal one engine inoperative speed" from an adequate diversion airport comply with rules set up specifically for "Extended Range Operation with Two Engine airplanes." This section provides reserve fuel planning information for the "Critical Fuel Scenario" based on two engine operation at Long Range Cruise as well as single engine operation at Long Range Cruise.

Long Range Cruise Critical Fuel Reserves

Enter the Ground to Air Miles Conversion table with forecast wind and ground distance to diversion airport from critical point to obtain air distance. Now enter the Critical Fuel table with air distance and expected weight at the critical point and read required fuel. Apply the noted fuel adjustments as necessary. Regulations require a 5% allowance for performance deterioration unless a value has been established by the operator for inservice deterioration.

As noted below each table, the fuel required is the greater of the two engine fuel and the single engine fuel. This fuel is compared to the amount of fuel normally onboard the airplane at that point in the route. If the fuel required by the critical fuel reserves exceeds the amount of fuel normally expected, the fuel load must be adjusted accordingly.

Landing

Tables are provided for determining the maximum landing weight as limited by field length or climb requirements for a single landing flap.

Maximum landing weight is the lowest of the field length limit weight, climb limit weight, or maximum certified landing weight.

Landing Field Limit Weight

Obtain wind corrected field length by entering the Wind Corrected Field Length table with field length available and wind component along the runway. Now enter the Field Limit Weight table with wind corrected field length and pressure altitude to read field limit weight for the expected runway condition.

Landing Climb Limit Weight

Enter the table with airport OAT and pressure altitude to read landing climb limit weight. Apply the noted adjustments as required.

Copyright © The Boeing Company. See title page for details.

Quick Turnaround Limit Weight

Enter the table with airport pressure altitude and OAT to read maximum quick turnaround weight. Apply the noted adjustments as required.

If the landing weight exceeds the maximum quick turnaround weight, wait the specified time and then check that the wheel thermal plugs have not melted before executing a subsequent takeoff, or ensure the brake temperature is within limits using the alternate procedure described on the page.

Copyright © The Boeing Company. See title page for details.

Intentionally
Blank

Copyright © The Boeing Company. See title page for details.

Takeoff Field Corrections - Dry Runway

Slope Corrections

FIELD LENGTH AVAILABLE (M)	SLOPE CORRECTED FIELD LENGTH (M)								
	RUNWAY SLOPE (%)								
	-2.0	-1.5	-1.0	-0.5	0.0	0.5	1.0	1.5	2.0
1200	1230	1220	1210	1210	1200	1190	1170	1160	1140
1400	1450	1440	1430	1410	1400	1370	1350	1320	1300
1600	1670	1650	1640	1620	1600	1560	1530	1490	1450
1800	1900	1870	1850	1820	1800	1750	1700	1650	1600
2000	2120	2090	2060	2030	2000	1940	1880	1820	1760
2200	2340	2310	2270	2240	2200	2130	2060	1980	1910
2400	2560	2520	2480	2440	2400	2320	2230	2150	2060
2600	2790	2740	2690	2650	2600	2500	2410	2310	2220
2800	3010	2960	2900	2850	2800	2690	2590	2480	2370
3000	3230	3170	3120	3060	3000	2880	2760	2640	2520
3200	3450	3390	3330	3260	3200	3070	2940	2810	2680
3400	3680	3610	3540	3470	3400	3260	3120	2970	2830
3600	3900	3820	3750	3670	3600	3450	3290	3140	2980
3800	4130	4050	3970	3880	3800	3630	3470	3300	3140
4000	4370	4280	4190	4090	4000	3820	3650	3470	3290
4200	4610	4510	4410	4300	4200	4010	3820	3630	3440
4400	4850	4740	4630	4510	4400	4200	4000	3800	3600
4600	5090	4970	4850	4720	4600	4390	4180	3960	3750
4800	5330	5200	5070	4930	4800	4580	4350	4130	3900
5000	5570	5430	5290	5140	5000	4760	4530	4290	4060

Wind Corrections

SLOPE CORR'D FIELD LENGTH (M)	SLOPE & WIND CORRECTED FIELD LENGTH (M)							
	WIND COMPONENT (KTS)							
	-15	-10	-5	0	10	20	30	40
1200	880	990	1090	1200	1260	1320	1390	1470
1400	1050	1170	1280	1400	1460	1530	1610	1690
1600	1220	1350	1470	1600	1670	1740	1820	1910
1800	1390	1530	1660	1800	1870	1950	2040	2130
2000	1560	1700	1850	2000	2080	2160	2250	2350
2200	1720	1880	2040	2200	2280	2370	2470	2570
2400	1890	2060	2230	2400	2490	2580	2680	2790
2600	2060	2240	2420	2600	2690	2790	2900	3010
2800	2230	2420	2610	2800	2900	3000	3110	3230
3000	2400	2600	2800	3000	3100	3210	3330	3460
3200	2570	2780	2990	3200	3310	3420	3540	3680
3400	2730	2960	3180	3400	3510	3630	3760	3900
3600	2900	3130	3370	3600	3720	3840	3970	4120
3800	3070	3310	3560	3800	3920	4050	4190	4340
4000	3240	3490	3750	4000	4130	4260	4410	4560
4200	3410	3670	3940	4200	4330	4470	4620	4780
4400	3570	3850	4120	4400	4540	4680	4840	5000
4600	3740	4030	4310	4600	4740	4890	5050	5220
4800	3910	4210	4500	4800	4950	5100	5270	5440
5000	4080	4390	4690	5000	5150	5310	5480	5660

Copyright © The Boeing Company. See title page for details.

Takeoff Field & Climb Limit Weights - Dry Runway

Flaps 5

Sea Level Pressure Altitude

CORR'D FIELD LENGTH (M)	FIELD LIMIT WEIGHT (1000 KG)										
	OAT										
	°C -40	14	18	22	24	26	28	30	42	46	50
	°F -40	57	64	72	75	79	82	86	108	115	122
1400	63.2	58.2	57.8	57.4	57.3	57.1	56.9	56.7	52.7	51.4	50.1
1600	68.3	62.9	62.5	62.1	61.9	61.7	61.5	61.3	57.0	55.6	54.2
1800	73.1	67.2	66.8	66.4	66.2	66.0	65.8	65.5	61.0	59.4	57.9
2000	77.7	71.3	70.9	70.4	70.2	70.0	69.8	69.5	64.6	62.9	61.3
2200	81.8	75.1	74.6	74.2	73.9	73.7	73.4	73.2	67.9	66.2	64.4
2400	85.7	78.6	78.1	77.6	77.4	77.1	76.8	76.6	71.0	69.2	67.3
2600	86.2	81.8	81.3	80.8	80.5	80.3	80.0	79.7	73.9	72.0	70.0
2800	86.2	84.9	84.4	83.8	83.6	83.3	83.0	82.7	76.7	74.7	72.7
3000	86.2	86.2	86.2	86.2	86.2	86.0	85.7	85.5	79.2	77.1	75.0
3200	86.2	86.2	86.2	86.2	86.2	86.2	86.2	86.2	81.4	79.2	77.1
3400	86.2	86.2	86.2	86.2	86.2	86.2	86.2	86.2	83.5	81.3	79.1
3600	86.2	86.2	86.2	86.2	86.2	86.2	86.2	86.2	85.5	83.3	81.0
3800	86.2	86.2	86.2	86.2	86.2	86.2	86.2	86.2	86.2	85.2	82.9
4000	86.2	86.2	86.2	86.2	86.2	86.2	86.2	86.2	86.2	86.2	84.7
4200	86.2	86.2	86.2	86.2	86.2	86.2	86.2	86.2	86.2	86.2	86.2
4400	86.2	86.2	86.2	86.2	86.2	86.2	86.2	86.2	86.2	86.2	86.2
4600	86.2	86.2	86.2	86.2	86.2	86.2	86.2	86.2	86.2	86.2	86.2
CLIMB LIMIT WT (1000 KG)	82.5	81.9	81.8	81.6	81.6	81.5	81.4	81.4	73.5	71.0	68.5

1000 FT Pressure Altitude

CORR'D FIELD LENGTH (M)	FIELD LIMIT WEIGHT (1000 KG)										
	OAT										
	°C -40	14	18	22	24	26	28	30	42	46	50
	°F -40	57	64	72	75	79	82	86	108	115	122
1400	61.5	56.6	56.2	55.9	55.7	55.5	55.4	54.8	51.0	49.7	48.4
1600	66.5	61.2	60.8	60.4	60.3	60.1	59.9	59.3	55.1	53.7	52.4
1800	71.2	65.4	65.0	64.6	64.4	64.2	64.0	63.4	58.9	57.4	56.0
2000	75.6	69.4	69.0	68.5	68.3	68.1	67.9	67.2	62.4	60.8	59.2
2200	79.6	73.1	72.6	72.1	71.9	71.7	71.4	70.7	65.6	63.9	62.2
2400	83.3	76.4	75.9	75.5	75.2	75.0	74.7	74.0	68.6	66.8	65.0
2600	86.2	79.6	79.1	78.5	78.3	78.0	77.8	77.0	71.3	69.5	67.6
2800	86.2	82.6	82.0	81.5	81.2	81.0	80.7	79.9	74.0	72.1	70.1
3000	86.2	85.3	84.8	84.2	83.9	83.6	83.4	82.5	76.4	74.4	72.4
3200	86.2	86.2	86.2	86.2	86.2	86.0	85.7	84.8	78.5	76.5	74.4
3400	86.2	86.2	86.2	86.2	86.2	86.2	86.2	86.2	80.6	78.4	76.3
3600	86.2	86.2	86.2	86.2	86.2	86.2	86.2	86.2	82.5	80.3	78.2
3800	86.2	86.2	86.2	86.2	86.2	86.2	86.2	86.2	84.4	82.2	80.0
4000	86.2	86.2	86.2	86.2	86.2	86.2	86.2	86.2	86.2	84.0	81.7
4200	86.2	86.2	86.2	86.2	86.2	86.2	86.2	86.2	86.2	85.7	83.4
4400	86.2	86.2	86.2	86.2	86.2	86.2	86.2	86.2	86.2	86.2	85.1
4600	86.2	86.2	86.2	86.2	86.2	86.2	86.2	86.2	86.2	86.2	86.2
CLIMB LIMIT WT (1000 KG)	80.6	80.0	79.9	79.8	79.7	79.7	79.6	78.5	71.1	68.7	66.3

With engine bleed for packs off, increase field limit weight by 400 kg and climb limit weight by 1250 kg.
With engine anti-ice on, decrease field limit weight by 200 kg and climb limit weight by 200 kg.
With engine and wing anti-ice on (optional system), decrease field limit weight by 750 kg and climb limit weight by 1350 kg.

Copyright © The Boeing Company. See title page for details.

Takeoff Field & Climb Limit Weights - Dry Runway

Flaps 5

2000 FT Pressure Altitude

CORR'D FIELD LENGTH (M)	FIELD LIMIT WEIGHT (1000 KG)										
	OAT										
	°C -40	14	18	22	24	26	28	30	42	46	50
	°F -40	57	64	72	75	79	82	86	108	115	122
1400	60.0	55.0	54.7	54.3	54.2	54.0	53.5	53.0	49.2	48.0	46.8
1600	64.9	59.5	59.1	58.8	58.6	58.4	57.9	57.3	53.3	51.9	50.6
1800	69.4	63.6	63.2	62.8	62.6	62.4	61.9	61.3	56.9	55.5	54.0
2000	73.7	67.4	67.0	66.6	66.4	66.2	65.6	64.9	60.2	58.7	57.2
2200	77.6	71.0	70.5	70.1	69.8	69.6	69.0	68.3	63.3	61.7	60.0
2400	81.2	74.2	73.7	73.3	73.0	72.8	72.1	71.4	66.2	64.4	62.7
2600	84.5	77.3	76.8	76.3	76.0	75.8	75.1	74.3	68.8	67.0	65.2
2800	86.2	80.2	79.6	79.1	78.9	78.6	77.9	77.1	71.4	69.5	67.6
3000	86.2	82.8	82.3	81.7	81.5	81.2	80.5	79.6	73.7	71.8	69.8
3200	86.2	85.1	84.5	84.0	83.7	83.5	82.7	81.8	75.8	73.8	71.8
3400	86.2	86.2	86.2	86.1	85.9	85.6	84.8	83.9	77.7	75.7	73.6
3600	86.2	86.2	86.2	86.2	86.2	86.2	86.2	86.0	79.6	77.5	75.4
3800	86.2	86.2	86.2	86.2	86.2	86.2	86.2	86.2	81.4	79.3	77.1
4000	86.2	86.2	86.2	86.2	86.2	86.2	86.2	86.2	83.2	81.0	78.8
4200	86.2	86.2	86.2	86.2	86.2	86.2	86.2	86.2	84.9	82.7	80.5
4400	86.2	86.2	86.2	86.2	86.2	86.2	86.2	86.2	86.2	84.3	82.1
4600	86.2	86.2	86.2	86.2	86.2	86.2	86.2	86.2	86.2	85.9	83.6
CLIMB LIMIT WT (1000 KG)	78.6	78.0	78.0	77.9	77.8	77.8	76.9	75.9	68.7	66.4	64.1

3000 FT Pressure Altitude

CORR'D FIELD LENGTH (M)	FIELD LIMIT WEIGHT (1000 KG)										
	OAT										
	°C -40	14	18	22	24	26	28	30	42	46	50
	°F -40	57	64	72	75	79	82	86	108	115	122
1400	58.1	53.2	52.9	52.6	52.4	52.0	51.6	51.1	47.5	46.3	45.2
1600	62.9	57.6	57.2	56.9	56.7	56.3	55.8	55.3	51.4	50.2	48.9
1800	67.2	61.5	61.1	60.8	60.6	60.1	59.6	59.1	55.0	53.6	52.3
2000	71.3	65.2	64.8	64.4	64.2	63.7	63.2	62.5	58.1	56.6	55.2
2200	75.1	68.6	68.1	67.7	67.5	67.0	66.4	65.8	61.1	59.5	58.0
2400	78.6	71.7	71.3	70.8	70.6	70.0	69.4	68.7	63.8	62.1	60.5
2600	81.8	74.6	74.2	73.7	73.5	72.9	72.2	71.5	66.4	64.6	63.0
2800	84.9	77.4	76.9	76.5	76.2	75.6	74.9	74.2	68.8	67.0	65.3
3000	86.2	80.0	79.5	79.0	78.7	78.1	77.4	76.6	71.1	69.2	67.4
3200	86.2	82.2	81.7	81.1	80.9	80.2	79.5	78.8	73.0	71.1	69.3
3400	86.2	84.3	83.8	83.2	83.0	82.3	81.6	80.8	74.9	72.9	71.1
3600	86.2	86.2	85.8	85.2	85.0	84.3	83.6	82.7	76.7	74.7	72.8
3800	86.2	86.2	86.2	86.2	86.2	86.2	85.5	84.6	78.5	76.4	74.4
4000	86.2	86.2	86.2	86.2	86.2	86.2	86.2	86.2	80.2	78.1	76.1
4200	86.2	86.2	86.2	86.2	86.2	86.2	86.2	86.2	81.9	79.7	77.6
4400	86.2	86.2	86.2	86.2	86.2	86.2	86.2	86.2	83.5	81.3	79.2
4600	86.2	86.2	86.2	86.2	86.2	86.2	86.2	86.2	85.1	82.8	80.7
CLIMB LIMIT WT (1000 KG)	76.2	75.7	75.6	75.5	75.5	74.8	74.1	73.2	66.4	64.2	62.0

With engine bleed for packs off, increase field limit weight by 400 kg and climb limit weight by 1250 kg.
With engine anti-ice on, decrease field limit weight by 200 kg and climb limit weight by 200 kg.
With engine and wing anti-ice on (optional system), decrease field limit weight by 750 kg and climb limit weight by 1350 kg.

Copyright © The Boeing Company. See title page for details.

Takeoff Field Corrections - Wet Runway

Slope Corrections

FIELD LENGTH AVAILABLE (M)	SLOPE CORRECTED FIELD LENGTH (M)								
	RUNWAY SLOPE (%)								
	-2.0	-1.5	-1.0	-0.5	0.0	0.5	1.0	1.5	2.0
1200	1200	1200	1200	1200	1200	1190	1170	1160	1140
1400	1430	1420	1420	1410	1400	1380	1360	1330	1310
1600	1670	1650	1630	1620	1600	1570	1540	1510	1480
1800	1900	1870	1850	1820	1800	1760	1720	1680	1650
2000	2130	2100	2070	2030	2000	1950	1910	1860	1810
2200	2360	2320	2280	2240	2200	2150	2090	2040	1980
2400	2600	2550	2500	2450	2400	2340	2280	2210	2150
2600	2830	2770	2720	2660	2600	2530	2460	2390	2320
2800	3060	3000	2930	2870	2800	2720	2640	2560	2490
3000	3300	3220	3150	3070	3000	2910	2830	2740	2650
3200	3530	3450	3370	3280	3200	3110	3010	2920	2820
3400	3760	3670	3580	3490	3400	3300	3200	3090	2990
3600	4000	3900	3800	3700	3600	3490	3380	3270	3160
3800	4230	4120	4020	3910	3800	3680	3560	3450	3330
4000	4460	4350	4230	4120	4000	3870	3750	3620	3500
4200	4700	4570	4450	4320	4200	4070	3930	3800	3670
4400	4930	4800	4670	4530	4400	4260	4120	3980	3830
4600	5160	5020	4880	4740	4600	4450	4300	4150	4000
4800	5400	5250	5100	4950	4800	4640	4490	4330	4170
5000	5630	5470	5320	5160	5000	4840	4670	4510	4340

Wind Corrections

SLOPE CORR'D FIELD LENGTH (M)	SLOPE & WIND CORRECTED FIELD LENGTH (M)							
	WIND COMPONENT (KTS)							
	-15	-10	-5	0	10	20	30	40
1200	860	970	1090	1200	1280	1360	1440	1520
1400	1030	1150	1280	1400	1480	1570	1660	1750
1600	1200	1330	1470	1600	1690	1790	1880	1980
1800	1370	1510	1660	1800	1900	2000	2100	2210
2000	1540	1690	1850	2000	2110	2210	2330	2440
2200	1710	1870	2040	2200	2310	2430	2550	2670
2400	1880	2050	2230	2400	2520	2640	2770	2900
2600	2050	2230	2420	2600	2730	2860	2990	3130
2800	2220	2410	2610	2800	2930	3070	3210	3360
3000	2390	2590	2800	3000	3140	3280	3430	3590
3200	2560	2770	2990	3200	3350	3500	3650	3820
3400	2730	2950	3180	3400	3550	3710	3880	4050
3600	2900	3130	3370	3600	3760	3930	4100	4270
3800	3070	3310	3560	3800	3970	4140	4320	4500
4000	3240	3490	3750	4000	4170	4360	4540	4730
4200	3410	3670	3940	4200	4380	4570	4760	4960
4400	3580	3850	4130	4400	4590	4780	4980	5190
4600	3740	4030	4310	4600	4800	5000	5210	5420
4800	3910	4210	4500	4800	5000	5210	5430	5650
5000	4080	4390	4690	5000	5210	5430	5650	5880

Copyright © The Boeing Company. See title page for details.

Takeoff Field & Climb Limit Weights - Wet Runway

Flaps 5

Sea Level Pressure Altitude

CORR'D FIELD LENGTH (M)	FIELD LIMIT WEIGHT (1000 KG)										
	OAT										
	°C -40	14	18	22	24	26	28	30	42	46	50
	°F -40	57	64	72	75	79	82	86	108	115	122
1400	63.3	57.6	57.2	56.8	56.6	56.4	56.2	55.9	52.0	50.7	49.4
1600	68.3	62.2	61.7	61.3	61.1	60.8	60.6	60.4	56.1	54.7	53.3
1800	72.9	66.3	65.9	65.4	65.2	64.9	64.7	64.5	59.9	58.4	56.9
2000	77.2	70.2	69.7	69.2	69.0	68.7	68.5	68.2	63.4	61.8	60.2
2200	81.2	73.9	73.3	72.8	72.6	72.3	72.0	71.8	66.7	65.0	63.3
2400	85.0	77.3	76.7	76.2	75.9	75.7	75.4	75.1	69.7	67.9	66.2
2600	86.2	80.6	80.0	79.4	79.1	78.8	78.5	78.2	72.6	70.7	68.9
2800	86.2	83.6	83.0	82.4	82.1	81.8	81.5	81.2	75.3	73.4	71.5
3000	86.2	86.2	85.6	85.0	84.7	84.4	84.0	83.7	77.7	75.7	73.7
3200	86.2	86.2	86.2	86.2	86.2	86.2	86.2	86.2	80.0	77.9	75.9
3400	86.2	86.2	86.2	86.2	86.2	86.2	86.2	86.2	82.2	80.1	78.0
3600	86.2	86.2	86.2	86.2	86.2	86.2	86.2	86.2	84.3	82.2	80.0
3800	86.2	86.2	86.2	86.2	86.2	86.2	86.2	86.2	86.2	84.1	81.9
4000	86.2	86.2	86.2	86.2	86.2	86.2	86.2	86.2	86.2	86.1	83.8
4200	86.2	86.2	86.2	86.2	86.2	86.2	86.2	86.2	86.2	86.2	85.6
4400	86.2	86.2	86.2	86.2	86.2	86.2	86.2	86.2	86.2	86.2	86.2
4600	86.2	86.2	86.2	86.2	86.2	86.2	86.2	86.2	86.2	86.2	86.2
CLIMB LIMIT WT (1000 KG)	82.5	81.9	81.8	81.6	81.6	81.5	81.4	81.4	73.5	71.0	68.5

1000 FT Pressure Altitude

CORR'D FIELD LENGTH (M)	FIELD LIMIT WEIGHT (1000 KG)										
	OAT										
	°C -40	14	18	22	24	26	28	30	42	46	50
	°F -40	57	64	72	75	79	82	86	108	115	122
1400	61.5	55.9	55.5	55.1	54.9	54.7	54.5	53.9	50.2	49.0	47.7
1600	66.4	60.3	59.9	59.5	59.3	59.1	58.8	58.2	54.2	52.9	51.5
1800	70.9	64.4	63.9	63.5	63.2	63.0	62.8	62.1	57.8	56.4	55.0
2000	75.0	68.1	67.6	67.2	66.9	66.7	66.5	65.8	61.2	59.7	58.2
2200	78.9	71.6	71.1	70.6	70.4	70.1	69.9	69.2	64.3	62.7	61.1
2400	82.6	75.0	74.4	73.9	73.6	73.4	73.1	72.4	67.3	65.6	63.9
2600	86.1	78.1	77.5	77.0	76.7	76.4	76.2	75.4	70.0	68.3	66.5
2800	86.2	81.0	80.5	79.9	79.6	79.3	79.0	78.2	72.7	70.8	69.0
3000	86.2	83.6	83.0	82.4	82.1	81.8	81.5	80.6	74.9	73.0	71.1
3200	86.2	86.1	85.5	84.9	84.6	84.3	83.9	83.0	77.1	75.2	73.2
3400	86.2	86.2	86.2	86.2	86.2	86.2	86.2	85.4	79.3	77.2	75.2
3600	86.2	86.2	86.2	86.2	86.2	86.2	86.2	86.2	81.3	79.2	77.2
3800	86.2	86.2	86.2	86.2	86.2	86.2	86.2	86.2	83.3	81.1	79.0
4000	86.2	86.2	86.2	86.2	86.2	86.2	86.2	86.2	85.2	83.0	80.8
4200	86.2	86.2	86.2	86.2	86.2	86.2	86.2	86.2	86.2	84.8	82.6
4400	86.2	86.2	86.2	86.2	86.2	86.2	86.2	86.2	86.2	86.2	84.3
4600	86.2	86.2	86.2	86.2	86.2	86.2	86.2	86.2	86.2	86.2	86.0
CLIMB LIMIT WT (1000 KG)	80.6	80.0	79.9	79.8	79.7	79.7	79.6	78.5	71.1	68.7	66.3

With engine bleed for packs off, increase field limit weight by 350 kg and climb limit weight by 1250 kg.
With engine anti-ice on, decrease field limit weight by 150 kg and climb limit weight by 200 kg.
With engine and wing anti-ice on (optional system), decrease field limit weight by 750 kg and climb limit weight by 1350 kg.

Copyright © The Boeing Company. See title page for details.

Takeoff Field & Climb Limit Weights - Wet Runway

Flaps 5

2000 FT Pressure Altitude

CORR'D FIELD LENGTH (M)	FIELD LIMIT WEIGHT (1000 KG)										
	OAT										
	°C -40	14	18	22	24	26	28	30	42	46	50
	°F -40	57	64	72	75	79	82	86	108	115	122
1400	59.8	54.2	53.8	53.4	53.2	53.0	52.6	52.1	48.5	47.3	46.1
1600	64.5	58.5	58.1	57.7	57.5	57.3	56.8	56.2	52.3	51.0	49.7
1800	68.9	62.4	62.0	61.5	61.3	61.1	60.6	60.0	55.8	54.5	53.1
2000	72.9	66.0	65.6	65.1	64.9	64.7	64.1	63.5	59.1	57.6	56.1
2200	76.7	69.4	69.0	68.5	68.2	68.0	67.4	66.7	62.1	60.5	59.0
2400	80.3	72.6	72.1	71.6	71.4	71.1	70.5	69.8	64.9	63.3	61.7
2600	83.7	75.7	75.1	74.6	74.3	74.1	73.4	72.7	67.5	65.8	64.1
2800	86.2	78.5	78.0	77.4	77.1	76.9	76.2	75.4	70.1	68.3	66.5
3000	86.2	81.0	80.4	79.8	79.6	79.3	78.5	77.8	72.3	70.4	68.6
3200	86.2	83.4	82.8	82.2	81.9	81.6	80.9	80.1	74.4	72.5	70.6
3400	86.2	85.7	85.1	84.5	84.2	83.9	83.1	82.3	76.4	74.5	72.5
3600	86.2	86.2	86.2	86.2	86.2	86.1	85.3	84.5	78.4	76.4	74.4
3800	86.2	86.2	86.2	86.2	86.2	86.2	86.2	86.2	80.3	78.2	76.2
4000	86.2	86.2	86.2	86.2	86.2	86.2	86.2	86.2	82.1	80.0	77.9
4200	86.2	86.2	86.2	86.2	86.2	86.2	86.2	86.2	83.9	81.7	79.6
4400	86.2	86.2	86.2	86.2	86.2	86.2	86.2	86.2	85.7	83.4	81.2
4600	86.2	86.2	86.2	86.2	86.2	86.2	86.2	86.2	86.2	85.1	82.9
CLIMB LIMIT WT (1000 KG)	78.6	78.0	78.0	77.9	77.8	77.8	76.9	75.9	68.7	66.4	64.1

3000 FT Pressure Altitude

CORR'D FIELD LENGTH (M)	FIELD LIMIT WEIGHT (1000 KG)										
	OAT										
	°C -40	14	18	22	24	26	28	30	42	46	50
	°F -40	57	64	72	75	79	82	86	108	115	122
1400	57.8	52.3	52.0	51.6	51.4	51.0	50.6	50.2	46.8	45.6	44.5
1600	62.4	56.5	56.1	55.7	55.5	55.1	54.7	54.1	50.5	49.2	48.1
1800	66.6	60.3	59.9	59.5	59.3	58.8	58.3	57.8	53.9	52.5	51.3
2000	70.5	63.8	63.4	62.9	62.7	62.2	61.7	61.1	57.0	55.6	54.3
2200	74.1	67.1	66.6	66.2	65.9	65.4	64.9	64.3	59.9	58.4	57.0
2400	77.6	70.2	69.7	69.2	69.0	68.4	67.8	67.2	62.6	61.0	59.5
2600	80.8	73.1	72.6	72.1	71.8	71.2	70.6	70.0	65.1	63.5	61.9
2800	83.9	75.8	75.3	74.8	74.5	73.9	73.3	72.6	67.5	65.8	64.2
3000	86.2	78.2	77.6	77.1	76.8	76.2	75.6	74.9	69.6	67.9	66.2
3200	86.2	80.5	79.9	79.4	79.1	78.5	77.8	77.1	71.7	69.8	68.1
3400	86.2	82.8	82.2	81.6	81.3	80.7	80.0	79.2	73.6	71.7	70.0
3600	86.2	84.9	84.3	83.7	83.4	82.8	82.0	81.3	75.5	73.6	71.8
3800	86.2	86.2	86.2	85.7	85.4	84.8	84.0	83.2	77.3	75.4	73.5
4000	86.2	86.2	86.2	86.2	86.2	86.2	85.9	85.1	79.1	77.1	75.2
4200	86.2	86.2	86.2	86.2	86.2	86.2	86.2	86.2	80.8	78.7	76.8
4400	86.2	86.2	86.2	86.2	86.2	86.2	86.2	86.2	82.5	80.4	78.4
4600	86.2	86.2	86.2	86.2	86.2	86.2	86.2	86.2	84.2	82.0	79.9
CLIMB LIMIT WT (1000 KG)	76.2	75.7	75.6	75.5	75.5	74.8	74.1	73.2	66.4	64.2	62.0

With engine bleed for packs off, increase field limit weight by 350 kg and climb limit weight by 1250 kg.
With engine anti-ice on, decrease field limit weight by 150 kg and climb limit weight by 200 kg.
With engine and wing anti-ice on (optional system), decrease field limit weight by 750 kg and climb limit weight by 1350 kg.

Copyright © The Boeing Company. See title page for details.

Takeoff Obstacle Limit Weight
Flaps 5
Sea Level 30°C & Below, Zero Wind
Based on engine bleed for packs on and anti-ice off
Reference Obstacle Limit Weight (1000 KG)

OBSTACLE HEIGHT (M)	DISTANCE FROM BRAKE RELEASE (100 M)										
	25	30	35	40	45	50	55	60	65	70	75
5	73.4	79.2	83.0								
20	67.2	72.8	77.1	80.3	82.5	84.1					
40	62.2	67.4	71.6	75.0	77.7	79.8	81.4	82.7	83.7	84.6	85.3
60	58.4	63.4	67.6	70.9	73.7	76.0	77.9	79.5	80.8	81.8	82.7
80	55.1	60.1	64.2	67.6	70.5	72.8	74.9	76.6	78.0	79.2	80.3
100	52.4	57.3	61.4	64.8	67.6	70.1	72.2	74.0	75.5	76.9	78.1
120	49.9	54.8	58.9	62.3	65.1	67.6	69.8	71.7	73.3	74.7	76.0
140	47.7	52.6	56.6	60.0	62.9	65.4	67.6	69.5	71.2	72.7	74.0
160	45.7	50.6	54.6	58.0	60.9	63.4	65.6	67.6	69.3	70.9	72.2
180	43.9	48.7	52.7	56.1	59.0	61.6	63.8	65.8	67.6	69.2	70.6
200	42.3	47.0	51.0	54.4	57.3	59.9	62.1	64.1	65.9	67.5	69.0
220		45.4	49.4	52.8	55.7	58.3	60.6	62.6	64.4	66.0	67.5
240		44.0	47.9	51.3	54.2	56.8	59.1	61.1	63.0	64.6	66.1
260		42.6	46.5	49.9	52.8	55.4	57.7	59.8	61.6	63.3	64.8
280			45.2	48.6	51.5	54.1	56.4	58.4	60.3	62.0	63.5
300			44.0	47.3	50.2	52.8	55.1	57.2	59.1	60.8	62.3

Obstacle height must be calculated from lowest point of the runway to conservatively account for runway slope.

OAT Adjustments

OAT (°C)	REFERENCE OBSTACLE LIMIT WEIGHT (1000 KG)					
	40	50	60	70	80	90
30 & BELOW	0	0	0	0	0	0
32	-0.6	-0.7	-0.9	-1.1	-1.3	-1.4
34	-1.1	-1.5	-1.8	-2.2	-2.5	-2.9
36	-1.7	-2.2	-2.7	-3.3	-3.8	-4.3
38	-2.2	-2.9	-3.6	-4.3	-5.0	-5.7
40	-2.8	-3.6	-4.5	-5.4	-6.2	-7.1
42	-3.3	-4.3	-5.4	-6.4	-7.4	-8.5
44	-3.8	-5.0	-6.2	-7.4	-8.6	-9.8
46	-4.4	-5.7	-7.1	-8.5	-9.8	-11.2
48	-4.9	-6.4	-8.0	-9.5	-11.0	-12.6
50	-5.4	-7.1	-8.8	-10.5	-12.2	-13.9

Pressure Altitude Adjustments

ALT (FT)	OAT ADJUSTED OBSTACLE LIMIT WEIGHT (1000 KG)					
	40	50	60	70	80	90
S.L & BELOW	0	0	0	0	0	0
1000	-1.5	-1.8	-2.2	-2.5	-2.9	-3.2
2000	-3.0	-3.7	-4.3	-4.9	-5.5	-6.1
3000	-4.1	-5.1	-6.2	-7.3	-8.3	-9.4

Copyright © The Boeing Company. See title page for details.

Takeoff Obstacle Limit Weight
Flaps 5
Sea Level 30°C & Below, Zero Wind
Based on engine bleed for packs on and anti-ice off
Wind Adjustments

WIND (KTS)	OAT & ALT ADJUSTED OBSTACLE LIMIT WEIGHT (1000 KG)					
	40	50	60	70	80	90
15 T W	-6.0	-6.2	-6.4	-6.6	-6.9	-7.1
10 T W	-4.0	-4.1	-4.3	-4.4	-4.6	-4.7
5 T W	-2.0	-2.1	-2.1	-2.2	-2.3	-2.4
0	0	0	0	0	0	0
10 H W	1.3	1.1	1.0	0.8	0.6	0.5
20 H W	2.6	2.2	1.9	1.6	1.2	0.9
30 H W	3.9	3.4	2.9	2.4	1.9	1.4
40 H W	5.2	4.6	3.9	3.2	2.5	1.8

With engine bleed for packs off, increase weight by 550 kg.
With engine anti-ice on, decrease weight by 250 kg.
With engine and wing anti-ice on, decrease weight by 1300 kg (optional system).

Copyright © The Boeing Company. See title page for details.

Long Range Cruise Maximum Operating Altitude

Max Cruise Thrust

ISA + 10°C and Below

WEIGHT (1000 KG)	OPTIMUM ALT (FT)	TAT (°C)	MARGIN TO INITIAL BUFFET 'G' (BANK ANGLE)				
			1.20 (33°)	1.25 (36°)	1.30 (39°)	1.40 (44°)	1.50 (48°)
85	30300	-5	32800*	32800*	32800*	32100	30700
80	31600	-8	34400*	34400*	34400*	33400	32000
75	33000	-11	35900*	35900*	35900*	34800	33400
70	34500	-15	37300*	37300*	37300*	36200	34900
65	36000	-18	38700*	38700*	38700*	37800	36400
60	37700	-18	40200*	40200*	40200*	39400	38100
55	39500	-18	41000	41000	41000	41000	39900
50	41000	-18	41000	41000	41000	41000	41000
45	41000	-18	41000	41000	41000	41000	41000
40	41000	-18	41000	41000	41000	41000	41000

ISA + 15°C

WEIGHT (1000 KG)	OPTIMUM ALT (FT)	TAT (°C)	MARGIN TO INITIAL BUFFET 'G' (BANK ANGLE)				
			1.20 (33°)	1.25 (36°)	1.30 (39°)	1.40 (44°)	1.50 (48°)
85	30300	0	30600*	30600*	30600*	30600*	30600*
80	31600	-3	32900*	32900*	32900*	32900*	32000
75	33000	-6	34800*	34800*	34800*	34800	33400
70	34500	-9	36300*	36300*	36300*	36200	34900
65	36000	-13	37800*	37800*	37800*	37800	36400
60	37700	-13	39200*	39200*	39200*	39200*	38100
55	39500	-13	40800*	40800*	40800*	40800*	39900
50	41000	-13	41000	41000	41000	41000	41000
45	41000	-13	41000	41000	41000	41000	41000
40	41000	-13	41000	41000	41000	41000	41000

ISA + 20°C

WEIGHT (1000 KG)	OPTIMUM ALT (FT)	TAT (°C)	MARGIN TO INITIAL BUFFET 'G' (BANK ANGLE)				
			1.20 (33°)	1.25 (36°)	1.30 (39°)	1.40 (44°)	1.50 (48°)
85	30300	6	27500*	27500*	27500*	27500*	27500*
80	31600	3	30000*	30000*	30000*	30000*	30000*
75	33000	0	32800*	32800*	32800*	32800*	32800*
70	34500	-3	34900*	34900*	34900*	34900*	34900
65	36000	-7	36500*	36500*	36500*	36500*	36400
60	37700	-7	38000*	38000*	38000*	38000*	38000*
55	39500	-7	39500*	39500*	39500*	39500*	39500*
50	41000	-7	41000	41000	41000	41000	41000
45	41000	-7	41000	41000	41000	41000	41000
40	41000	-7	41000	41000	41000	41000	41000

***Denotes altitude thrust limited in level flight, 100 fpm residual rate of climb.**

Copyright © The Boeing Company. See title page for details.

Long Range Cruise Trip Fuel and Time

Ground to Air Miles Conversion

AIR DISTANCE (NM)					GROUND DISTANCE (NM)	AIR DISTANCE (NM)				
HEADWIND COMPONENT (KTS)						TAILWIND COMPONENT (KTS)				
100	80	60	40	20		20	40	60	80	100
279	259	241	226	212	200	190	181	173	166	160
554	515	480	450	424	400	382	365	349	335	322
829	771	720	675	636	600	573	548	525	504	485
1103	1027	958	899	847	800	764	732	701	673	648
1376	1282	1197	1123	1059	1000	956	915	877	843	811
1649	1536	1435	1348	1270	1200	1147	1098	1053	1012	974
1921	1791	1673	1571	1482	1400	1339	1282	1229	1181	1138
2192	2044	1911	1795	1693	1600	1530	1465	1405	1351	1301
2463	2297	2148	2019	1904	1800	1721	1648	1581	1520	1465
2733	2550	2386	2242	2115	2000	1913	1832	1758	1690	1628
3003	2803	2622	2465	2326	2200	2105	2016	1934	1859	1791
3272	3054	2859	2688	2537	2400	2296	2200	2111	2029	1955
3540	3306	3095	2911	2748	2600	2488	2384	2287	2199	2119
3807	3556	3330	3133	2959	2800	2680	2568	2464	2369	2282
4074	3807	3566	3356	3169	3000	2871	2752	2641	2539	2446
4340	4057	3801	3578	3380	3200	3063	2935	2817	2709	2610
4606	4306	4036	3800	3590	3400	3255	3119	2994	2879	2774
4870	4555	4270	4021	3801	3600	3446	3303	3171	3049	2938
5134	4803	4504	4243	4011	3800	3638	3487	3347	3219	3102
5397	5051	4738	4464	4221	4000	3830	3671	3524	3389	3266
5659	5298	4971	4685	4431	4200	4021	3855	3701	3559	3430
5920	5544	5204	4906	4641	4400	4213	4038	3877	3729	3594
6181	5790	5437	5127	4851	4600	4404	4222	4054	3899	3758
6440	6035	5669	5347	5061	4800	4596	4406	4230	4069	3921
6699	6280	5901	5568	5271	5000	4787	4589	4406	4238	4085

Copyright © The Boeing Company. See title page for details.

Long Range Cruise Trip Fuel and Time

Reference Fuel and Time Required

AIR DIST (NM)	PRESSURE ALTITUDE (1000 FT)									
	29		31		33		35		37	
	FUEL (1000 KG)	TIME (HR:MIN)	FUEL (1000 KG)	TIME (HR:MIN)	FUEL (1000 KG)	TIME (HR:MIN)	FUEL (1000 KG)	TIME (HR:MIN)	FUEL (1000 KG)	TIME (HR:MIN)
200	1.5	0:38	1.5	0:37	1.5	0:37	1.5	0:36	1.5	0:36
400	2.5	1:09	2.5	1:08	2.4	1:06	2.4	1:05	2.4	1:04
600	3.5	1:40	3.5	1:38	3.4	1:36	3.4	1:33	3.3	1:31
800	4.6	2:11	4.5	2:09	4.4	2:05	4.3	2:01	4.3	1:58
1000	5.7	2:42	5.5	2:39	5.4	2:34	5.3	2:29	5.2	2:25
1200	6.8	3:12	6.6	3:08	6.5	3:02	6.3	2:56	6.2	2:52
1400	7.9	3:42	7.7	3:37	7.5	3:30	7.3	3:23	7.2	3:19
1600	9.0	4:12	8.7	4:06	8.5	3:58	8.3	3:51	8.2	3:46
1800	10.1	4:42	9.8	4:35	9.6	4:26	9.3	4:18	9.1	4:13
2000	11.2	5:11	10.9	5:04	10.6	4:55	10.3	4:45	10.1	4:40
2200	12.3	5:40	12.0	5:32	11.7	5:22	11.4	5:12	11.2	5:07
2400	13.5	6:09	13.1	5:59	12.8	5:49	12.5	5:39	12.2	5:34
2600	14.7	6:38	14.3	6:27	13.9	6:17	13.5	6:06	13.3	6:00
2800	15.8	7:06	15.4	6:55	15.0	6:44	14.6	6:33	14.3	6:27
3000	17.0	7:35	16.5	7:23	16.1	7:11	15.6	7:00	15.4	6:54
3200	18.2	8:03	17.7	7:49	17.2	7:38	16.8	7:26	16.5	7:20
3400	19.4	8:30	18.9	8:16	18.4	8:05	17.9	7:53	17.6	7:47
3600	20.7	8:58	20.1	8:43	19.5	8:31	19.0	8:20	18.8	8:13
3800	21.9	9:26	21.3	9:10	20.7	8:58	20.2	8:46	19.9	8:39
4000	23.1	9:53	22.5	9:37	21.8	9:25	21.3	9:13	21.0	9:06
4200	24.4	10:20	23.7	10:03	23.0	9:51	22.5	9:39		
4400	25.7	10:47	25.0	10:30	24.3	10:18	23.7	10:05		
4600	27.0	11:14	26.2	10:56	25.5	10:44	24.9	10:32		
4800	28.3	11:41	27.5	11:23	26.7	11:10	26.2	10:58		
5000	29.5	12:08	28.7	11:49	27.9	11:37	27.4	11:24		

Fuel Required Adjustments (1000 KG)

REFERENCE FUEL REQUIRED (1000 KG)	LANDING WEIGHT (1000 KG)						
	40	45	50	55	60	65	70
2	-0.2	-0.1	0.0	0.1	0.2	0.4	0.5
4	-0.4	-0.2	0.0	0.2	0.5	0.8	1.2
6	-0.5	-0.3	0.0	0.3	0.8	1.4	2.0
8	-0.7	-0.4	0.0	0.5	1.1	2.0	3.0
10	-0.9	-0.5	0.0	0.6	1.5	2.6	4.0
12	-1.1	-0.5	0.0	0.7	1.8	3.3	5.2
14	-1.2	-0.6	0.0	0.8	2.2	4.1	6.5
16	-1.4	-0.7	0.0	1.0	2.6	4.9	7.9
18	-1.6	-0.8	0.0	1.1	3.1	5.9	9.5
20	-1.8	-0.9	0.0	1.3	3.5	6.8	11.1
22	-2.0	-1.0	0.0	1.4	4.0	7.9	12.9
24	-2.2	-1.1	0.0	1.6	4.5	9.0	14.8
26	-2.4	-1.2	0.0	1.7	5.1	10.1	16.8
28	-2.6	-1.3	0.0	1.9	5.7	11.3	18.9
30	-2.8	-1.4	0.0	2.0	6.3	12.6	21.2
32	-3.0	-1.5	0.0	2.2	6.9	14.0	23.5

Based on 280/.78 climb, Long Range Cruise and .78/280/250 descent.

Copyright © The Boeing Company. See title page for details.

Long Range Cruise Step Climb

Ground to Air Miles Conversion

AIR DISTANCE (NM)					GROUND DISTANCE (NM)	AIR DISTANCE (NM)				
HEADWIND COMPONENT (KTS)						TAILWIND COMPONENT (KTS)				
100	80	60	40	20		20	40	60	80	100
1316	1237	1168	1106	1050	1000	954	912	874	839	807
1830	1724	1630	1545	1469	1400	1337	1280	1227	1179	1134
2343	2210	2091	1984	1888	1800	1720	1647	1580	1518	1461
2856	2695	2552	2423	2306	2200	2103	2015	1933	1858	1789
3369	3181	3013	2861	2724	2600	2486	2382	2287	2198	2117
3882	3666	3474	3300	3143	3000	2870	2750	2640	2539	2445
4395	4152	3934	3738	3561	3400	3253	3118	2993	2879	2772
4907	4637	4395	4177	3980	3800	3636	3485	3347	3219	3100
5420	5123	4856	4616	4398	4200	4019	3853	3700	3559	3428
5933	5608	5317	5054	4816	4600	4402	4221	4054	3899	3756
6447	6094	5778	5493	5235	5000	4785	4588	4407	4239	4084

Trip Fuel and Time Required

AIR DIST (NM)	TRIP FUEL (1000 KG)							TIME (HRS:MIN)
	LANDING WEIGHT (1000 KG)							
	40	45	50	55	60	65	70	
1000	4.5	4.8	5.2	5.6	5.9	6.4	6.7	2:24
1400	6.2	6.5	7.1	7.7	8.2	8.8	9.2	3:17
1800	7.8	8.3	9.1	9.8	10.5	11.2	11.9	4:10
2200	9.5	10.2	11.1	12.0	12.8	13.7	14.6	5:03
2600	11.3	12.1	13.2	14.2	15.3	16.3	17.4	5:56
3000	13.0	14.1	15.3	16.6	17.8	19.0	20.2	6:49
3400	14.9	16.1	17.5	19.0	20.3	21.8	23.2	7:42
3800	16.8	18.2	19.8	21.4	23.0	24.6	26.2	8:34
4200	18.8	20.4	22.2	24.0	25.7	27.6		9:27
4600	20.8	22.6	24.6	26.6	28.6	30.6		10:20
5000	22.9	24.9	27.0	29.3	31.5	33.7		11:13

Based on 280/.78 climb, Long Range Cruise or .78 and .78/280/250 descent.
Valid for all pressure altitudes with 4000 ft step climb to 2000 ft above optimum altitude.

Copyright © The Boeing Company. See title page for details.

Short Trip Fuel and Time

Ground to Air Miles Conversion

AIR DISTANCE (NM) HEADWIND COMPONENT (KTS)					GROUND DISTANCE (NM)	AIR DISTANCE (NM) TAILWIND COMPONENT (KTS)				
100	80	60	40	20		20	40	60	80	100
93	80	69	61	55	50	46	42	39	36	34
160	143	129	118	108	100	93	87	82	77	73
225	205	188	173	161	150	141	132	125	118	112
290	266	246	228	213	200	188	178	169	160	153
353	326	303	283	265	250	236	224	213	203	194
416	386	360	338	318	300	284	270	257	245	235
478	446	417	392	370	350	332	316	301	288	276
542	506	474	447	422	400	380	362	346	331	317
606	567	532	502	474	450	428	408	390	373	358
672	629	591	557	527	500	476	454	434	415	398

Trip Fuel and Time Required

AIR DIST (NM)		LANDING WEIGHT (1000 KG)							TIME (HRS:MIN)
		40	45	50	55	60	65	70	
50	FUEL (1000 KG)	0.5	0.5	0.6	0.6	0.7	0.7	0.7	0:14
	ALT (FT)	12000	12000	11000	11000	9000	9000	8000	
100	FUEL (1000 KG)	0.8	0.9	0.9	1.0	1.0	1.1	1.1	0:22
	ALT (FT)	19000	18000	18000	18000	17000	17000	17000	
150	FUEL (1000 KG)	1.1	1.1	1.2	1.3	1.3	1.4	1.5	0:30
	ALT (FT)	26000	25000	25000	24000	23000	22000	22000	
200	FUEL (1000 KG)	1.3	1.4	1.5	1.6	1.6	1.7	1.8	0:37
	ALT (FT)	35000	30000	28000	27000	26000	26000	26000	
250	FUEL (1000 KG)	1.5	1.6	1.7	1.8	1.9	2.0	2.1	0:44
	ALT (FT)	40000	37000	36000	35000	34000	31000	30000	
300	FUEL (1000 KG)	1.7	1.8	1.9	2.1	2.2	2.3	2.4	0:50
	ALT (FT)	41000	40000	39000	37000	35000	34000	32000	
350	FUEL (1000 KG)	1.9	2.0	2.2	2.3	2.4	2.6	2.7	0:56
	ALT (FT)	41000	40000	40000	38000	36000	35000	33000	
400	FUEL (1000 KG)	2.1	2.2	2.4	2.5	2.7	2.9	3.0	1:03
	ALT (FT)	41000	40000	40000	38000	36000	35000	33000	
450	FUEL (1000 KG)	2.3	2.5	2.6	2.8	3.0	3.1	3.3	1:10
	ALT (FT)	41000	41000	40000	38000	36000	35000	34000	
500	FUEL (1000 KG)	2.5	2.7	2.8	3.0	3.2	3.4	3.6	1:17
	ALT (FT)	41000	41000	40000	38000	36000	35000	34000	

Based on 280/.78 climb, Long Range Cruise and .78/280/250 descent.

Holding Planning

Flaps Up

WEIGHT (1000 KG)	TOTAL FUEL FLOW (KG/HR) PRESSURE ALTITUDE (FT)								
	1500	5000	10000	15000	20000	25000	30000	35000	41000
85	3080	3030	3020	2990	2970	2980	3080		
80	2910	2870	2840	2830	2780	2790	2860	3130	
75	2750	2700	2670	2650	2600	2600	2660	2800	
70	2590	2540	2500	2480	2430	2420	2470	2550	
65	2420	2370	2340	2310	2270	2230	2280	2330	
60	2260	2210	2180	2140	2110	2050	2090	2130	
55	2100	2050	2010	1980	1940	1890	1910	1940	2110
50	1950	1890	1850	1810	1780	1730	1750	1770	1890
45	1790	1730	1690	1680	1640	1610	1590	1590	1670
40	1670	1620	1560	1520	1480	1450	1440	1420	1480

This table includes 5% additional fuel for holding in a racetrack pattern.

Copyright © The Boeing Company. See title page for details.

Crew Oxygen Requirements

Required Pressure (PSI) for 76 Cu. Ft. Cylinder

BOTTLE TEMPERATURE		NUMBER OF CREW USING OXYGEN		
°C	°F	2	3	4
50	122	735	1055	1360
45	113	725	1040	1340
40	104	715	1020	1320
35	92	700	1005	1300
30	86	690	990	1280
25	77	680	975	1255
20	68	670	960	1240
15	59	655	940	1215
10	50	645	925	1195
5	41	635	910	1175
0	32	620	890	1150
-5	23	610	875	1130
-10	14	600	860	1110

Required Pressure (PSI) for 114/115 Cu. Ft. Cylinder

BOTTLE TEMPERATURE		NUMBER OF CREW USING OXYGEN		
°C	°F	2	3	4
50	122	530	735	945
45	113	520	725	930
40	104	510	715	915
35	92	505	700	900
30	86	495	690	885
25	77	485	680	870
20	68	480	670	860
15	59	470	655	840
10	50	460	645	830
5	41	455	635	815
0	32	445	620	800
-5	23	440	610	785
-10	14	430	600	770

Copyright © The Boeing Company. See title page for details.

ENGINE INOP

MAX CONTINUOUS THRUST

Net Level Off Weight

PRESSURE ALTITUDE (1000 FT)	LEVEL OFF WEIGHT (1000 KG)		
	ISA + 10°C & BELOW	ISA + 15°C	ISA + 20°C
30	42.5	41.3	
28	46.3	44.9	43.5
26	50.3	48.8	47.3
24	54.7	52.9	51.3
22	59.4	57.4	55.5
20	64.4	62.2	60.1
18	69.4	66.9	64.4
16	74.2	71.8	69.4
14	78.1	76.3	74.3
12	83.4	81.1	78.2
10	86.1	85.4	81.8

Anti-Ice Adjustments

ANTI-ICE CONFIGURATION	LEVEL OFF WEIGHT ADJUSTMENT (1000 KG)										
	PRESSURE ALTITUDE (1000 FT)										
	10	12	14	16	18	20	22	24	26	28	30
ENGINE ONLY		-2.9	-2.5	-1.7	-1.6	-1.5	-1.4	-1.3	-1.2	-1.1	
ENGINE AND WING	-5.3	-7.8	-6.4	-6.6	-6.3	-5.8	-5.5	-5.1	-4.7	-4.4	

Copyright © The Boeing Company. See title page for details.

ALL ENGINES

Long Range Cruise Critical Fuel Reserves

Ground to Air Miles Conversion

AIR DISTANCE (NM) HEADWIND COMPONENT (KTS)					GROUND DISTANCE (NM)	AIR DISTANCE (NM) TAILWIND COMPONENT (KTS)				
100	80	60	40	20		20	40	60	80	100
287	264	245	228	213	200	189	178	169	161	153
585	535	494	458	427	400	376	355	336	319	304
882	806	742	688	641	600	564	532	503	478	455
1180	1077	991	918	855	800	752	709	671	636	605
1477	1348	1240	1148	1069	1000	939	886	838	795	756
1774	1619	1489	1379	1283	1200	1127	1062	1005	953	907
2072	1890	1738	1609	1497	1400	1315	1239	1172	1112	1057
2369	2161	1987	1839	1711	1600	1502	1416	1339	1270	1208
2667	2432	2236	2069	1925	1800	1690	1593	1506	1429	1358

Critical Fuel (1000 KG)

AIR DIST (NM)	WEIGHT AT CRITICAL POINT (1000 KG)								
	45	50	55	60	65	70	75	80	85
200	1.8	1.9	2.0	2.1	2.1	2.2	2.3	2.4	2.4
300	2.6	2.7	2.8	2.9	3.0	3.1	3.2	3.3	3.4
400	3.4	3.5	3.6	3.7	3.9	4.0	4.1	4.3	4.4
500	4.1	4.3	4.4	4.6	4.7	4.9	5.0	5.2	5.4
600	4.9	5.1	5.2	5.4	5.6	5.8	6.0	6.2	6.3
700	5.6	5.8	6.0	6.2	6.4	6.6	6.8	7.1	7.3
800	6.4	6.6	6.8	7.0	7.3	7.5	7.7	8.0	8.2
900	7.2	7.4	7.6	7.9	8.1	8.4	8.6	8.9	9.2
1000	7.9	8.1	8.4	8.7	8.9	9.2	9.5	9.8	10.1
1100	8.7	8.9	9.2	9.5	9.8	10.1	10.4	10.7	11.1
1200	9.4	9.6	10.0	10.3	10.6	10.9	11.3	11.6	12.0
1300	10.2	10.4	10.7	11.1	11.4	11.8	12.1	12.5	12.9
1400	10.9	11.1	11.5	11.9	12.2	12.6	13.0	13.4	13.8
1500	11.7	11.9	12.3	12.7	13.1	13.5	13.9	14.3	14.7
1600	12.5	12.7	13.0	13.4	13.9	14.3	14.7	15.2	15.7
1700	13.2	13.4	13.8	14.2	14.7	15.1	15.6	16.1	16.6
1800	14.0	14.2	14.5	15.0	15.5	16.0	16.4	16.9	17.5

Based on: Emergency descent to 10000 ft. Level cruise at 10000 ft. 250 KIAS descent to 1500 ft. 15 minutes hold at 1500 ft. One missed approach; approach and land. 5% allowance for wind errors.
Increase fuel required 0.5% for each 10°C hotter than ISA conditions.
If icing conditions exist, increase fuel by 15% to account for engine and wing anti-ice on and ice accumulation on unheated surfaces.
Allowance for performance deterioration not included.
Compare the fuel required from this chart with critical fuel reserves for one engine inoperative.
Use the higher of the two.

Copyright © The Boeing Company. See title page for details.

ENGINE INOP

Long Range Cruise Critical Fuel Reserves
Ground to Air Miles Conversion

AIR DISTANCE (NM)					GROUND DISTANCE (NM)	AIR DISTANCE (NM)				
HEADWIND COMPONENT (KTS)						TAILWIND COMPONENT (KTS)				
100	80	60	40	20		20	40	60	80	100
292	267	246	229	213	200	188	178	168	160	152
595	542	498	460	428	400	375	354	334	317	301
898	817	749	692	643	600	563	530	500	474	451
1201	1092	1000	923	857	800	750	706	666	631	600
1504	1366	1252	1155	1072	1000	937	882	833	789	749
1808	1641	1503	1386	1286	1200	1124	1058	999	946	898
2111	1916	1754	1618	1501	1400	1312	1234	1165	1103	1047
2414	2191	2006	1849	1716	1600	1499	1410	1331	1260	1197
2717	2466	2257	2081	1930	1800	1686	1586	1497	1417	1346

Critical Fuel (1000 KG)

AIR DIST (NM)	WEIGHT AT CRITICAL POINT (1000 KG)								
	45	50	55	60	65	70	75	80	85
200	1.7	1.7	1.8	1.9	2.0	2.1	2.1	2.2	2.3
300	2.3	2.4	2.5	2.7	2.8	2.9	3.0	3.1	3.2
400	3.0	3.1	3.3	3.4	3.6	3.7	3.8	4.0	4.1
500	3.7	3.8	4.0	4.2	4.4	4.5	4.7	4.9	5.1
600	4.3	4.5	4.7	4.9	5.1	5.4	5.6	5.8	6.0
700	5.0	5.2	5.5	5.7	5.9	6.2	6.4	6.6	6.9
800	5.7	5.9	6.2	6.4	6.7	7.0	7.2	7.5	7.8
900	6.4	6.6	6.9	7.2	7.5	7.8	8.1	8.4	8.7
1000	7.0	7.3	7.6	7.9	8.2	8.6	8.9	9.2	9.6
1100	7.7	7.9	8.3	8.6	9.0	9.4	9.7	10.1	10.4
1200	8.4	8.6	9.0	9.4	9.8	10.2	10.5	10.9	11.3
1300	9.0	9.3	9.7	10.1	10.5	10.9	11.4	11.8	12.2
1400	9.7	10.0	10.4	10.8	11.3	11.7	12.2	12.6	13.0
1500	10.4	10.6	11.1	11.5	12.0	12.5	12.9	13.4	13.9
1600	11.1	11.3	11.7	12.2	12.7	13.2	13.7	14.3	14.8
1700	11.7	12.0	12.4	12.9	13.5	14.0	14.5	15.1	15.6
1800	12.4	12.6	13.1	13.6	14.2	14.8	15.3	15.9	16.5

Based on: Emergency descent to 10000 ft. Level cruise at 10000 ft. 250 KIAS descent to 1500 ft. 15 minutes hold at 1500 ft. One missed approach; approach and land. 5% allowance for wind errors.
Increase fuel required 0.5% for each 10°C hotter than ISA conditions.
If icing conditions exist, increase fuel by 15% to account for engine and wing anti-ice on and ice accumulation on unheated surfaces.
Allowance for performance deterioration not included.
Compare the fuel required from this chart with critical fuel reserves for all engines operative.
Use the higher of the two.

Copyright © The Boeing Company. See title page for details.

Intentionally
Blank

Copyright © The Boeing Company. See title page for details.

Landing Field Limit Weight
Flaps 40
Wind Corrected Field Length (M)

FIELD LENGTH AVAILABLE (M)	WIND COMPONENT (KTS)							
	-15	-10	-5	0	10	20	30	40
1000		810	900	1000	1060	1130	1200	1270
1200	900	1000	1100	1200	1270	1340	1420	1500
1400	1080	1180	1290	1400	1470	1560	1640	1720
1600	1250	1360	1480	1600	1680	1770	1850	1940
1800	1430	1550	1670	1800	1890	1980	2070	2170
2000	1610	1730	1860	2000	2090	2190	2290	2390
2200	1790	1920	2050	2200	2300	2400	2510	2620
2400	1970	2100	2250	2400	2510	2610	2720	
2600	2140	2290	2440	2600	2720			
2800	2320	2470	2630	2800				
3000	2500	2650						
3200	2680							

Field Limit Weight (1000 KG)

WIND CORR'D FIELD LENGTH (M)	AIRPORT PRESSURE ALTITUDE (FT)											
	0		2000		4000		6000		8000		10000	
	DRY	WET	DRY	WET	DRY	WET	DRY	WET	DRY	WET	DRY	WET
1000	36.0											
1200	46.0	38.2	43.4	36.0	40.9		38.5		36.2			
1400	55.7	46.9	52.9	44.2	49.9	41.7	47.1	39.2	44.3	36.9	41.6	
1600	63.7	55.4	60.8	52.5	58.1	49.5	55.4	46.7	52.4	43.9	49.3	41.3
1800	72.3	62.3	68.7	59.5	65.2	56.8	62.2	54.1	59.3	51.0	56.5	48.0
2000	81.3	69.6	77.1	66.1	73.2	63.0	69.4	60.2	65.8	57.4	62.6	54.7
2200	88.5	77.4	85.3	73.4	81.2	69.7	77.0	66.1	72.9	62.9	69.0	60.0
2400		85.0		80.8	87.8	76.7	84.5	72.7	80.1	68.8	75.7	65.2
2600		90.4		87.1		83.7	89.8	79.3	85.6	75.1	81.7	71.0
2800						88.8		85.5	88.4	81.3	84.8	76.8
3000								90.1		85.7	87.1	81.8
3200										88.2	89.4	84.6
3400										90.6		86.6
3600												88.6
3800												90.6

Decrease field limit weight 4300 kg when using manual speedbrakes.

Copyright © The Boeing Company. See title page for details.

Landing Climb Limit Weight

Valid for approach with Flaps 15 and landing with Flaps 30 or 40

Based on engine bleed for packs on and anti-ice off

AIRPORT OAT		LANDING CLIMB LIMIT WEIGHT (1000 KG)					
		AIRPORT PRESSURE ALTITUDE (FT)					
°C	°F	0	2000	4000	6000	8000	10000
50	122	66.4	61.4				
48	118	67.8	62.9				
46	115	69.0	64.4	59.4			
44	111	70.2	65.6	60.8			
42	108	71.5	66.8	62.2	57.1		
40	104	72.7	68.0	63.4	58.4		
38	100	74.0	69.1	64.5	59.7	54.4	
36	97	75.3	70.4	65.7	60.8	55.3	
34	93	76.7	71.7	66.9	61.9	56.3	51.5
32	90	78.1	72.9	68.0	62.9	57.3	52.7
30	86	79.4	74.0	68.8	63.8	58.3	53.7
28	82	79.5	75.0	69.6	64.6	59.2	54.5
26	79	79.5	75.9	70.3	65.2	60.1	55.5
24	75	79.6	75.9	70.9	65.7	60.9	56.0
22	72	79.7	76.0	71.4	66.1	61.3	56.6
20	68	79.7	76.0	71.4	66.7	61.7	57.1
18	64	79.8	76.1	71.5	67.1	62.1	57.3
16	61	79.9	76.1	71.5	67.1	62.5	57.8
14	57	79.9	76.2	71.6	67.2	62.9	58.1
12	54	80.0	76.2	71.6	67.2	62.9	58.4
10	50	80.0	76.3	71.6	67.2	62.9	58.8
-40	-40	80.6	76.8	72.1	67.7	63.3	59.3

With engine bleeds for packs off, increase weight by 1200 kg.
With engine anti-ice on, decrease weight by 300 kg.
With engine and wing anti-ice on, decrease weight by 1400 kg.
When operating in icing conditions during any part of the flight when forecast landing temperature is below 10°C, decrease weight by 5500 kg.

Copyright © The Boeing Company. See title page for details.

Quick Turnaround Limit Weight
Flaps 40

AIRPORT OAT		LIMIT WEIGHT (1000 KG)			
		AIRPORT PRESSURE ALTITUDE (FT)			
°C	°F	0	1000	2000	3000
50	122	80.2	78.7	77.2	
40	104	81.6	80.1	78.5	77.0
30	86	83.1	81.5	79.9	78.3
20	68	84.6	83.0	81.4	79.8
10	50	86.2	84.5	82.9	81.3
0	32	86.2	86.1	84.5	82.8
-10	14	86.2	86.2	86.2	84.5
-20	-4	86.2	86.2	86.2	86.1
-30	-22	86.2	86.2	86.2	86.2
-40	-40	86.2	86.2	86.2	86.2

Increase weight by 750 kg per 1% uphill slope. Decrease weight by 1200 kg per 1% downhill slope.
Increase weight by 1750 kg per 10 knots headwind. Decrease weight by 7750 kg per 10 knots tailwind.

After landing at weights exceeding those shown above, adjusted for slope and wind, wait at least 67 minutes and check that wheel thermal plugs have not melted before executing a takeoff.

As an alternate procedure, ensure that each brake pressure plate temperature, without artificial cooling, is less than 218°C as follows: No sooner than 10 and no later than 15 minutes after parking, measure each brake pressure plate surface temperature at a minimum of two points per brake by an accurate method (using a Doric Microtemp 450 hand held thermometer or equivalent, hold temperature probe in place for 20 seconds or until reading stabilizes). If each measured temperature is less than 218°C, immediate dispatch is allowed; otherwise the required minimum ground wait period of 67 minutes applies.

Copyright © The Boeing Company. See title page for details.

Intentionally
Blank

Copyright © The Boeing Company. See title page for details.

Introduction

This chapter contains self dispatch performance data intended primarily for use by flight crews in the event that information cannot be obtained from the airline dispatch office. The takeoff data provided is for a single takeoff flap at max takeoff thrust. The range of conditions covered is limited to those normally encountered in airline operation. In the event of conflict between the data presented in this chapter and that contained in the approved Airplane Flight Manual, the Flight Manual shall always take precedence.

Takeoff

The maximum allowable takeoff weight will be the least of the Field, Climb and Obstacle Limit Weights as determined from the tables shown. Tire and Brake Energy Limits are not shown as they are not limiting for the range of conditions shown in this chapter.

Field Limit Weight - Slope and Wind Corrections

These tables for dry and wet runways provide corrections to the field length available for the effects of runway slope and wind component along the runway. Enter the appropriate table with the available field length and runway slope to determine the slope corrected field length. Next enter the appropriate table with slope corrected field length and wind component to determine the slope and wind corrected field length.

Field and Climb Limit Weight

Tables are presented for selected airport pressure altitudes and runway conditions and show both Field and Climb Limit Weights. Enter the appropriate table for pressure altitude and runway condition with “Slope and Wind Corrected Field Length” determined above and airport OAT to obtain Field Limit Weight. Also read Climb Limit Weight for the same OAT. Intermediate altitudes may be interpolated or use next higher altitude. When finding a maximum weight for a wet runway, the dry runway limit weight must also be determined and the lower of the two weights used.

Copyright © The Boeing Company. See title page for details.

Obstacle Limit Weight

The Reference Obstacle Limit Weight table provides obstacle limit weights for reference airport conditions based on obstacle height above the runway surface and distance from brake release. Enter the adjustment tables to adjust the reference Obstacle Limit Weight for the effects of OAT, pressure altitude and wind as indicated. In the case of multiple obstacles, enter the tables successively with each obstacle and determine the most limiting weight.

Enroute

Long Range Cruise Maximum Operating Altitude

These tables provide the maximum operating altitude in the same manner as the FMC. Maximum altitudes are shown for a given cruise weight and maneuver capability. Note that this table considers both thrust and buffet limits, providing the more limiting of the two. Any data that is thrust limited is denoted by an asterisk and represents only a thrust limited condition in level flight with 100 ft/min residual rate of climb. Flying above these altitudes with sustained banks in excess of approximately 15° may cause the airplane to lose speed and/or altitude. The altitudes shown in the table are limited to the maximum certified altitude of 41000 ft.

Long Range Cruise Trip Fuel and Time

Long Range Cruise Trip Fuel and Time tables are provided to determine trip time and fuel required to destination.

To determine trip fuel and time for a constant altitude cruise, first enter the Ground to Air Miles Conversion table to convert ground distance and enroute wind to an equivalent still air distance for use with the Reference Fuel and Time tables. Next, enter the Reference Fuel and Time table with air distance from the Ground to Air Miles Conversion table and the desired altitude and read Reference Fuel and Time Required. Lastly, enter the Fuel Required Adjustment table with the Reference Fuel and the planned landing weight to obtain the adjustment to the fuel required at the planned landing weight.

Long Range Cruise Step Climb Trip Fuel and Time

The Long Range Cruise Step Climb Trip Fuel and Time tables are provided to determine trip time and fuel required to destination when flying a step climb profile. Step climb profiles are based on 4000 ft step climbs to keep the flight within 2000 ft of the optimum altitude for the current cruise weight. To determine trip fuel and time, enter the Ground to Air Miles

Copyright © The Boeing Company. See title page for details.

Conversion table and determine air distance as discussed above. Then enter the Trip Fuel and Time Required table with air distance and planned landing weight to read trip fuel. Continue across the table to read trip time.

Short Trip Fuel and Time

These tables are provided to determine trip fuel and time for short distances or alternates. Obtain air distance from the table using the ground distance and wind component to the alternate. Enter the Trip Fuel and Time Required table with air distance and read trip fuel required for the expected landing weight, together with time to alternate at right. For distances greater than shown or other altitudes, use the Long Range Cruise Trip Fuel and Time tables.

Holding Planning

This table provides total fuel flow information necessary for planning flaps up holding and reserve fuel requirements. Data is based on the FMC holding speed schedule which is the higher of the maximum endurance and flaps up maneuver speeds. As noted, the fuel flow is based on flight in a racetrack holding pattern. For holding in straight and level flight, reduce table values by 5%.

Crew Oxygen Requirements

Tables are provided to determine the minimum dispatch oxygen pressure for protective breathing equipment used by the flight crew. Enter the number of crew plus observers using oxygen and read the minimum cylinder pressure required for the appropriate bottle temperature and size. These pressures provide sufficient oxygen for 15 minutes of protective breathing for each flight crew member plus 10% contingency at 8000 ft cabin pressure altitude. Route specific analysis is necessary to determine if additional oxygen pressure is needed to meet supplemental oxygen requirements.

Net Level Off Weight

The Net Level Off Weight table is provided to determine terrain clearance capability in straight and level flight following an engine failure. Regulations require terrain clearance planning based on net performance which is the gross (or actual) gradient performance degraded by 1.1%. In addition, the net level off pressure altitude must clear the terrain by 1000 ft.

To determine the maximum weight for terrain clearance, enter the table with required net level off pressure altitude and expected ISA deviation to obtain weight. Adjust weight for anti-ice operation as noted below the table.

Copyright © The Boeing Company. See title page for details.

Extended Range Operations

Regulations require that flights conducted over a route that contains a point further than one hour's time at "normal one engine inoperative speed" from an adequate diversion airport comply with rules set up specifically for "Extended Range Operation with Two Engine airplanes." This section provides reserve fuel planning information for the "Critical Fuel Scenario" based on two engine operation at Long Range Cruise as well as single engine operation at Long Range Cruise.

Long Range Cruise Critical Fuel Reserves

Enter the Ground to Air Miles Conversion table with forecast wind and ground distance to diversion airport from critical point to obtain air distance. Now enter the Critical Fuel table with air distance and expected weight at the critical point and read required fuel. Apply the noted fuel adjustments as necessary. Regulations require a 5% allowance for performance deterioration unless a value has been established by the operator for inservice deterioration.

As noted below each table, the fuel required is the greater of the two engine fuel and the single engine fuel. This fuel is compared to the amount of fuel normally onboard the airplane at that point in the route. If the fuel required by the critical fuel reserves exceeds the amount of fuel normally expected, the fuel load must be adjusted accordingly.

Landing

Tables are provided for determining the maximum landing weight as limited by field length or climb requirements for a single landing flap.

Maximum landing weight is the lowest of the field length limit weight, climb limit weight, or maximum certified landing weight.

Landing Field Limit Weight

Obtain wind corrected field length by entering the Wind Corrected Field Length table with field length available and wind component along the runway. Now enter the Field Limit Weight table with wind corrected field length and pressure altitude to read field limit weight for the expected runway condition.

Landing Climb Limit Weight

Enter the table with airport OAT and pressure altitude to read landing climb limit weight. Apply the noted adjustments as required.

Copyright © The Boeing Company. See title page for details.

Quick Turnaround Limit Weight

Enter the table with airport pressure altitude and OAT to read maximum quick turnaround weight. Apply the noted adjustments as required.

If the landing weight exceeds the maximum quick turnaround weight, wait the specified time and then check that the wheel thermal plugs have not melted before executing a subsequent takeoff, or ensure the brake temperature is within limits using the alternate procedure described on the page.

Copyright © The Boeing Company. See title page for details.

Intentionally
Blank

Copyright © The Boeing Company. See title page for details.

Takeoff Field Corrections - Dry Runway

Slope Corrections

FIELD LENGTH AVAILABLE (FT)	SLOPE CORRECTED FIELD LENGTH (FT)								
	RUNWAY SLOPE (%)								
	-2.0	-1.5	-1.0	-0.5	0.0	0.5	1.0	1.5	2.0
4200	4280	4260	4240	4220	4200	4150	4100	4050	4000
4600	4710	4680	4650	4630	4600	4520	4450	4370	4300
5000	5130	5100	5070	5030	5000	4900	4800	4700	4600
5400	5560	5520	5480	5440	5400	5270	5150	5020	4900
5800	5990	5940	5890	5850	5800	5650	5500	5350	5200
6200	6420	6370	6310	6260	6200	6030	5850	5680	5500
6600	6870	6800	6730	6670	6600	6400	6200	6000	5800
7000	7310	7230	7160	7080	7000	6780	6550	6330	6100
7400	7760	7670	7580	7490	7400	7150	6900	6650	6400
7800	8200	8100	8000	7900	7800	7530	7250	6980	6700
8200	8650	8540	8420	8310	8200	7900	7600	7300	7000
8600	9090	8970	8850	8720	8600	8280	7950	7630	7300
9000	9540	9400	9270	9130	9000	8650	8300	7950	7600
9400	9980	9840	9690	9550	9400	9030	8650	8280	7900
9800	10430	10270	10110	9960	9800	9400	9000	8600	8200
10200	10890	10710	10540	10370	10200	9780	9350	8930	8500
10600	11360	11170	10980	10790	10600	10150	9700	9250	8810
11000	11830	11620	11420	11210	11000	10530	10050	9580	9110
11400	12300	12080	11850	11630	11400	10900	10400	9900	9410
11800	12770	12530	12290	12040	11800	11280	10750	10230	9710

Wind Corrections

SLOPE CORR'D FIELD LENGTH (FT)	SLOPE & WIND CORRECTED FIELD LENGTH (FT)							
	WIND COMPONENT (KTS)							
	-15	-10	-5	0	10	20	30	40
4200	3130	3490	3840	4200	4430	4670	4900	5140
4600	3460	3840	4220	4600	4840	5090	5340	5590
5000	3800	4200	4600	5000	5250	5510	5770	6040
5400	4130	4550	4980	5400	5670	5930	6210	6480
5800	4470	4910	5360	5800	6080	6360	6640	6930
6200	4800	5270	5730	6200	6490	6780	7080	7380
6600	5130	5620	6110	6600	6900	7200	7510	7820
7000	5470	5980	6490	7000	7310	7630	7950	8270
7400	5800	6340	6870	7400	7720	8050	8380	8720
7800	6140	6690	7250	7800	8130	8470	8820	9160
8200	6470	7050	7620	8200	8540	8890	9250	9610
8600	6810	7400	8000	8600	8960	9320	9680	10060
9000	7140	7760	8380	9000	9370	9740	10120	10500
9400	7470	8120	8760	9400	9780	10160	10550	10950
9800	7810	8470	9140	9800	10190	10590	10990	11400
10200	8140	8830	9510	10200	10600	11010	11420	11850
10600	8480	9180	9890	10600	11010	11430	11860	12290
11000	8810	9540	10270	11000	11420	11850	12290	12740
11400	9140	9900	10650	11400	11830	12280	12730	13190
11800	9480	10250	11030	11800	12250	12700	13160	13630

Copyright © The Boeing Company. See title page for details.

Takeoff Field & Climb Limit Weights - Dry Runway

Flaps 5

Sea Level Pressure Altitude

CORR'D FIELD LENGTH (FT)	FIELD LIMIT WEIGHT (1000 LB)										
	OAT (°C)										
	-40	0	11	14	18	22	26	30	35	40	50
4000	123.5	115.5	113.4	112.8	112.0	111.2	110.5	109.7	106.5	103.4	97.1
4200	127.2	119.0	116.8	116.2	115.4	114.6	113.8	113.0	109.8	106.5	100.0
4600	134.4	125.8	123.4	122.8	122.0	121.1	120.3	119.5	116.1	112.7	105.9
5000	141.2	132.2	129.7	129.1	128.2	127.4	126.5	125.7	122.1	118.5	111.4
5400	147.6	138.2	135.6	135.0	134.1	133.2	132.3	131.4	127.6	123.9	116.5
5800	153.8	144.0	141.3	140.6	139.7	138.7	137.8	136.9	133.0	129.1	121.4
6200	159.7	149.5	146.8	146.0	145.0	144.1	143.1	142.1	138.1	134.1	126.0
6600	165.4	154.9	152.0	151.2	150.2	149.2	148.2	147.2	143.0	138.8	130.5
7000	170.9	160.0	157.0	156.2	155.2	154.1	153.1	152.1	147.7	143.4	134.8
7400	176.2	165.0	161.9	161.1	160.0	158.9	157.9	156.8	152.3	147.9	139.0
7800	181.3	169.7	166.5	165.7	164.6	163.5	162.4	161.3	156.7	152.1	142.9
8200	186.2	174.3	171.1	170.2	169.1	167.9	166.8	165.7	160.9	156.3	146.9
8600	189.9	178.7	175.4	174.5	173.3	172.2	171.1	169.9	165.0	160.3	150.6
9000	189.9	182.8	179.4	178.4	177.2	176.1	174.9	173.7	168.8	163.9	154.0
9400	189.9	186.3	182.9	181.9	180.7	179.5	178.3	177.1	172.1	167.1	157.0
9800	189.9	189.7	186.2	185.3	184.0	182.8	181.6	180.3	175.2	170.1	159.8
10200	189.9	189.9	189.3	188.3	187.1	185.8	184.6	183.3	178.1	172.9	162.4
10600	189.9	189.9	189.9	189.9	189.9	188.7	187.4	186.2	180.8	175.6	165.0
CLIMB LIMIT WT (1000 LB)	188.1	187.4	186.8	186.6	186.4	186.1	185.8	185.4	177.7	170.3	155.9

2000 FT Pressure Altitude

CORR'D FIELD LENGTH (FT)	FIELD LIMIT WEIGHT (1000 LB)										
	OAT (°C)										
	-40	0	11	14	18	22	26	30	35	40	50
4000	116.9	108.9	106.9	106.3	105.6	104.9	104.3	102.4	99.5	96.4	90.4
4200	120.4	112.2	110.1	109.6	108.8	108.1	107.4	105.5	102.5	99.4	93.2
4600	127.2	118.6	116.5	115.9	115.1	114.4	113.6	111.6	108.5	105.2	98.7
5000	133.7	124.7	122.5	121.9	121.1	120.3	119.5	117.4	114.1	110.6	103.9
5400	139.8	130.4	128.0	127.4	126.6	125.8	124.9	122.8	119.3	115.7	108.6
5800	145.6	135.9	133.4	132.8	131.9	131.0	130.2	127.9	124.4	120.6	113.2
6200	151.2	141.1	138.5	137.8	136.9	136.1	135.2	132.8	129.1	125.2	117.5
6600	156.6	146.1	143.4	142.7	141.8	140.9	140.0	137.5	133.7	129.6	121.7
7000	161.8	150.9	148.2	147.4	146.5	145.5	144.6	142.1	138.1	133.9	125.7
7400	166.8	155.6	152.8	152.0	151.0	150.1	149.1	146.5	142.4	138.0	129.5
7800	171.6	160.1	157.2	156.4	155.4	154.3	153.3	150.7	146.4	142.0	133.3
8200	176.3	164.5	161.5	160.7	159.6	158.6	157.5	154.8	150.5	145.9	136.9
8600	180.8	168.7	165.6	164.8	163.7	162.6	161.6	158.7	154.3	149.6	140.4
9000	184.8	172.4	169.3	168.4	167.3	166.3	165.2	162.3	157.8	153.0	143.6
9400	188.5	175.8	172.6	171.7	170.6	169.5	168.4	165.5	160.8	155.9	146.4
9800	189.9	179.0	175.7	174.9	173.7	172.6	171.5	168.5	163.7	158.7	149.0
10200	189.9	182.0	178.6	177.8	176.6	175.4	174.3	171.2	166.5	161.4	151.4
10600	189.9	184.8	181.4	180.5	179.3	178.1	177.0	173.9	169.0	163.9	153.8
CLIMB LIMIT WT (1000 LB)	179.3	178.6	178.1	178.0	177.8	177.6	177.3	173.1	166.2	159.2	145.8

With engine bleed for packs off, increase field limit weight by 800 lb and climb limit weight by 3100 lb.
With engine anti-ice on, decrease field limit weight by 500 lb and climb limit weight by 600 lb.
With engine and wing anti-ice on (optional system), decrease field limit weight by 1900 lb and climb limit weight by 3200 lb.

Copyright © The Boeing Company. See title page for details.

Takeoff Field & Climb Limit Weights - Dry Runway

Flaps 5

4000 FT Pressure Altitude

CORR'D FIELD LENGTH (FT)	FIELD LIMIT WEIGHT (1000 LB)										
	OAT (°C)										
	-40	0	11	14	18	22	26	30	35	40	50
4000	109.4	101.9	100.0	99.5	98.8	98.1	96.7	95.1	92.5	89.5	84.3
4200	112.7	105.0	103.1	102.6	101.8	101.1	99.7	98.0	95.3	92.3	86.9
4600	119.2	111.1	109.1	108.5	107.8	107.0	105.5	103.8	101.0	97.8	92.1
5000	125.3	116.9	114.7	114.1	113.4	112.6	111.0	109.2	106.2	102.9	97.0
5400	131.0	122.2	120.0	119.4	118.6	117.7	116.1	114.2	111.1	107.7	101.5
5800	136.5	127.3	125.0	124.4	123.5	122.7	121.0	119.0	115.8	112.2	105.7
6200	141.7	132.2	129.8	129.1	128.3	127.4	125.6	123.5	120.2	116.5	109.8
6600	146.8	136.9	134.4	133.7	132.8	131.9	130.0	127.9	124.4	120.6	113.6
7000	151.6	141.4	138.8	138.1	137.2	136.2	134.3	132.1	128.5	124.5	117.3
7400	156.3	145.8	143.1	142.4	141.4	140.5	138.5	136.2	132.5	128.4	121.0
7800	160.8	150.0	147.2	146.5	145.5	144.5	142.5	140.1	136.3	132.1	124.4
8200	165.2	154.1	151.3	150.5	149.5	148.4	146.4	143.9	140.1	135.7	127.9
8600	169.4	158.0	155.1	154.3	153.3	152.2	150.1	147.6	143.7	139.2	131.2
9000	173.2	161.6	158.6	157.8	156.7	155.7	153.5	150.9	146.9	142.3	134.1
9400	176.6	164.7	161.7	160.9	159.8	158.7	156.5	153.9	149.7	145.1	136.7
9800	179.8	167.7	164.6	163.8	162.7	161.5	159.3	156.6	152.4	147.7	139.1
10200	182.8	170.5	167.3	166.5	165.3	164.2	161.9	159.2	154.9	150.1	141.4
10600	185.6	173.1	169.9	169.1	167.9	166.8	164.4	161.7	157.3	152.4	143.6
CLIMB LIMIT WT (1000 LB)	168.6	167.9	167.5	167.4	167.2	167.0	164.5	161.0	155.2	148.5	136.5

6000 FT Pressure Altitude

CORR'D FIELD LENGTH (FT)	FIELD LIMIT WEIGHT (1000 LB)										
	OAT (°C)										
	-40	0	11	14	18	22	26	30	35	40	50
4000	102.2	95.0	93.1	92.7	92.0	90.8	89.5	88.0	85.6	83.0	78.1
4200	105.3	97.9	96.0	95.5	94.9	93.6	92.3	90.8	88.3	85.6	80.6
4600	111.4	103.7	101.7	101.2	100.5	99.1	97.8	96.1	93.6	90.7	85.5
5000	117.1	109.1	107.0	106.4	105.7	104.3	102.9	101.2	98.5	95.5	90.1
5400	122.5	114.1	111.9	111.3	110.6	109.1	107.6	105.9	103.1	100.0	94.2
5800	127.6	118.9	116.6	116.0	115.2	113.7	112.2	110.3	107.4	104.2	98.2
6200	132.5	123.4	121.1	120.4	119.6	118.1	116.4	114.5	111.5	108.1	101.9
6600	137.2	127.7	125.3	124.7	123.8	122.2	120.5	118.5	115.4	111.9	105.5
7000	141.7	132.0	129.4	128.8	127.9	126.2	124.5	122.4	119.2	115.6	108.9
7400	146.1	136.1	133.5	132.8	131.9	130.1	128.4	126.2	122.9	119.1	112.3
7800	150.3	139.9	137.3	136.6	135.6	133.9	132.0	129.8	126.4	122.6	115.5
8200	154.4	143.8	141.1	140.3	139.4	137.6	135.7	133.4	129.9	125.9	118.7
8600	158.4	147.5	144.7	143.9	143.0	141.1	139.1	136.8	133.2	129.2	121.8
9000	161.9	150.8	147.9	147.2	146.2	144.3	142.3	139.9	136.2	132.1	124.5
9400	165.1	153.7	150.8	150.0	149.0	147.0	145.0	142.6	138.8	134.6	126.9
9800	168.1	156.5	153.5	152.7	151.7	149.7	147.6	145.2	141.3	137.0	129.2
10200	170.9	159.1	156.0	155.2	154.2	152.1	150.0	147.5	143.6	139.3	131.3
10600	173.5	161.5	158.4	157.6	156.5	154.5	152.4	149.8	145.9	141.4	133.3
CLIMB LIMIT WT (1000 LB)	158.1	157.5	157.2	157.1	156.9	154.8	152.5	149.3	143.6	137.3	126.7

With engine bleed for packs off, increase field limit weight by 800 lb and climb limit weight by 3100 lb.
With engine anti-ice on, decrease field limit weight by 500 lb and climb limit weight by 600 lb.
With engine and wing anti-ice on (optional system), decrease field limit weight by 1900 lb and climb limit weight by 3200 lb.

Copyright © The Boeing Company. See title page for details.

Takeoff Field & Climb Limit Weights - Dry Runway

Flaps 5

8000 FT Pressure Altitude

CORR'D FIELD LENGTH (FT)	FIELD LIMIT WEIGHT (1000 LB)										
	OAT (°C)										
	-40	0	11	14	18	22	26	30	35	40	50
4000	95.2	88.4	86.7	86.3	85.2	84.1	82.8	81.1	78.5	76.1	71.6
4200	98.1	91.1	89.4	89.0	87.9	86.7	85.4	83.6	81.1	78.6	73.9
4600	103.8	96.5	94.7	94.3	93.1	91.9	90.5	88.7	86.0	83.3	78.5
5000	109.2	101.6	99.7	99.2	98.0	96.8	95.3	93.4	90.6	87.8	82.7
5400	114.3	106.3	104.3	103.8	102.6	101.3	99.7	97.7	94.8	91.9	86.6
5800	119.1	110.8	108.7	108.2	106.9	105.5	103.9	101.8	98.8	95.8	90.3
6200	123.6	115.0	112.9	112.3	110.9	109.5	107.9	105.7	102.5	99.4	93.7
6600	128.0	119.0	116.8	116.2	114.8	113.4	111.6	109.4	106.1	102.8	96.9
7000	132.2	122.9	120.7	120.1	118.6	117.1	115.3	113.0	109.5	106.2	100.1
7400	136.3	126.7	124.4	123.8	122.3	120.7	118.9	116.4	112.9	109.5	103.1
7800	140.2	130.4	128.0	127.3	125.8	124.2	122.2	119.8	116.2	112.6	106.1
8200	144.0	134.0	131.5	130.8	129.2	127.6	125.6	123.1	119.4	115.7	109.1
8600	147.7	137.4	134.9	134.2	132.6	130.9	128.9	126.3	122.5	118.7	111.9
9000	151.0	140.5	137.9	137.2	135.5	133.8	131.8	129.1	125.2	121.4	114.4
9400	154.0	143.2	140.6	139.9	138.2	136.4	134.3	131.6	127.6	123.7	116.6
9800	156.7	145.8	143.1	142.4	140.6	138.8	136.7	133.9	129.9	125.9	118.6
10200	159.3	148.2	145.4	144.7	142.9	141.1	138.9	136.1	132.0	128.0	120.6
10600	161.8	150.4	147.7	146.9	145.1	143.3	141.1	138.2	134.0	129.9	122.4
CLIMB LIMIT WT (1000 LB)	148.0	147.4	147.2	147.0	145.3	143.4	140.6	136.5	130.7	125.3	115.7

10000 FT Pressure Altitude

CORR'D FIELD LENGTH (FT)	FIELD LIMIT WEIGHT (1000 LB)										
	OAT (°C)										
	-40	0	11	14	18	22	26	30	35	40	50
4000	88.6	82.3	80.7	79.9	78.8	77.8	76.5	74.8	72.4	69.9	65.2
4200	91.3	84.9	83.2	82.4	81.3	80.3	79.0	77.3	74.7	72.2	67.3
4600	96.7	90.0	88.2	87.4	86.3	85.1	83.8	82.0	79.3	76.7	71.6
5000	101.8	94.8	92.9	92.0	90.9	89.7	88.3	86.4	83.6	80.8	75.5
5400	106.5	99.2	97.2	96.3	95.1	93.8	92.4	90.4	87.5	84.6	79.0
5800	111.0	103.4	101.3	100.3	99.1	97.8	96.3	94.2	91.2	88.2	82.4
6200	115.2	107.3	105.2	104.2	102.8	101.5	100.0	97.8	94.6	91.5	85.5
6600	119.3	111.0	108.9	107.8	106.4	105.0	103.4	101.2	97.9	94.7	88.4
7000	123.2	114.7	112.4	111.3	109.9	108.5	106.8	104.5	101.1	97.8	91.3
7400	127.0	118.2	115.9	114.8	113.3	111.8	110.1	107.7	104.2	100.8	94.1
7800	130.6	121.6	119.2	118.0	116.5	115.0	113.3	110.8	107.2	103.7	96.8
8200	134.2	125.0	122.5	121.3	119.8	118.2	116.4	113.9	110.2	106.6	99.5
8600	137.7	128.2	125.7	124.5	122.9	121.3	119.4	116.8	113.1	109.3	102.1
9000	140.8	131.1	128.5	127.2	125.6	124.0	122.1	119.4	115.6	111.8	104.4
9400	143.5	133.6	131.0	129.7	128.0	126.4	124.4	121.7	117.8	113.9	106.3
9800	146.1	136.0	133.3	132.0	130.3	128.6	126.6	123.8	119.8	115.9	108.2
10200	148.5	138.2	135.5	134.1	132.4	130.7	128.7	125.9	121.8	117.8	109.9
10600	150.8	140.3	137.6	136.2	134.5	132.7	130.7	127.8	123.7	119.6	111.6
CLIMB LIMIT WT (1000 LB)	138.8	137.9	137.2	136.0	134.3	132.4	129.7	125.8	120.3	115.1	104.9

With engine bleed for packs off, increase field limit weight by 800 lb and climb limit weight by 3100 lb.
With engine anti-ice on, decrease field limit weight by 500 lb and climb limit weight by 600 lb.
With engine and wing anti-ice on (optional system), decrease field limit weight by 1900 lb and climb limit weight by 3200 lb.

Copyright © The Boeing Company. See title page for details.

Takeoff Field Corrections - Wet Runway

Slope Corrections

FIELD LENGTH AVAILABLE (FT)	SLOPE CORRECTED FIELD LENGTH (FT)								
	RUNWAY SLOPE (%)								
	-2.0	-1.5	-1.0	-0.5	0.0	0.5	1.0	1.5	2.0
4200	4330	4300	4260	4230	4200	4160	4110	4070	4020
4600	4770	4730	4690	4640	4600	4540	4480	4420	4360
5000	5210	5160	5110	5050	5000	4930	4850	4780	4700
5400	5660	5590	5530	5460	5400	5310	5220	5130	5040
5800	6100	6030	5950	5880	5800	5700	5590	5490	5380
6200	6540	6460	6370	6290	6200	6080	5960	5840	5720
6600	6990	6890	6790	6700	6600	6470	6330	6200	6060
7000	7430	7320	7210	7110	7000	6850	6700	6550	6400
7400	7870	7750	7640	7520	7400	7240	7070	6910	6740
7800	8310	8190	8060	7930	7800	7620	7440	7260	7080
8200	8760	8620	8480	8340	8200	8010	7810	7620	7420
8600	9200	9050	8900	8750	8600	8390	8180	7970	7760
9000	9640	9480	9320	9160	9000	8780	8550	8330	8100
9400	10090	9910	9740	9570	9400	9160	8920	8680	8440
9800	10530	10350	10160	9980	9800	9550	9290	9040	8780
10200	11000	10800	10600	10400	10200	9930	9660	9390	9120
10600	11500	11270	11050	10820	10600	10320	10030	9750	9460
11000	11990	11740	11500	11250	11000	10700	10400	10100	9800
11400	12490	12220	11940	11670	11400	11090	10770	10460	10140
11800	12990	12690	12390	12100	11800	11470	11140	10810	10480

Wind Corrections

SLOPE CORR'D FIELD LENGTH (FT)	SLOPE & WIND CORRECTED FIELD LENGTH (FT)							
	WIND COMPONENT (KTS)							
	-15	-10	-5	0	10	20	30	40
4200	3050	3430	3820	4200	4460	4730	5000	5280
4600	3390	3790	4200	4600	4870	5160	5440	5740
5000	3730	4150	4580	5000	5290	5580	5890	6190
5400	4070	4520	4960	5400	5700	6010	6330	6650
5800	4410	4880	5340	5800	6120	6440	6770	7110
6200	4750	5240	5720	6200	6530	6870	7220	7570
6600	5100	5600	6100	6600	6940	7300	7660	8030
7000	5440	5960	6480	7000	7360	7730	8100	8490
7400	5780	6320	6860	7400	7770	8150	8550	8950
7800	6120	6680	7240	7800	8190	8580	8990	9410
8200	6460	7040	7620	8200	8600	9010	9430	9870
8600	6800	7400	8000	8600	9010	9440	9880	10320
9000	7140	7760	8380	9000	9430	9870	10320	10780
9400	7480	8120	8760	9400	9840	10300	10760	11240
9800	7820	8480	9140	9800	10260	10720	11210	11700
10200	8160	8840	9520	10200	10670	11150	11650	12160
10600	8500	9200	9900	10600	11080	11580	12090	12620
11000	8840	9560	10280	11000	11500	12010	12540	13080
11400	9180	9920	10660	11400	11910	12440	12980	13540
11800	9520	10280	11040	11800	12330	12870	13420	14000

Copyright © The Boeing Company. See title page for details.

Takeoff Field & Climb Limit Weights - Wet Runway

Flaps 5

Sea Level Pressure Altitude

CORR'D FIELD LENGTH (FT)	FIELD LIMIT WEIGHT (1000 LB)										
	OAT (°C)										
	-40	0	11	14	18	22	26	30	35	40	50
4000	124.0	115.5	113.2	112.6	111.8	111.0	110.2	109.4	106.1	103.0	96.8
4200	127.6	118.8	116.4	115.8	114.9	114.1	113.3	112.5	109.2	105.9	99.5
4600	134.6	125.3	122.8	122.1	121.2	120.3	119.5	118.6	115.1	111.6	104.8
5000	141.2	131.4	128.8	128.1	127.1	126.2	125.3	124.4	120.7	117.0	109.9
5400	147.5	137.2	134.5	133.7	132.7	131.8	130.8	129.9	126.0	122.2	114.7
5800	153.5	142.8	139.9	139.1	138.1	137.1	136.1	135.1	131.1	127.1	119.3
6200	159.1	148.0	145.0	144.2	143.2	142.1	141.1	140.1	135.9	131.7	123.6
6600	164.6	153.1	150.0	149.1	148.0	147.0	145.9	144.8	140.5	136.2	127.8
7000	169.9	157.9	154.7	153.9	152.8	151.6	150.6	149.4	144.9	140.5	131.8
7400	175.0	162.7	159.4	158.5	157.3	156.2	155.1	153.9	149.3	144.7	135.8
7800	179.9	167.3	163.9	163.0	161.8	160.6	159.4	158.2	153.4	148.7	139.5
8200	184.8	171.7	168.2	167.3	166.1	164.9	163.7	162.4	157.5	152.7	143.2
8600	189.4	176.0	172.4	171.5	170.2	169.0	167.7	166.5	161.4	156.5	146.7
9000	189.9	180.0	176.3	175.3	174.0	172.8	171.5	170.2	165.0	160.0	150.0
9400	189.9	183.7	180.0	179.0	177.6	176.3	175.0	173.7	168.4	163.2	153.0
9800	189.9	187.4	183.5	182.5	181.1	179.8	178.5	177.2	171.7	166.4	156.0
10200	189.9	189.9	187.0	185.9	184.5	183.2	181.8	180.5	174.9	169.5	158.8
10600	189.9	189.9	189.9	189.2	187.8	186.4	185.1	183.7	178.0	172.4	161.6
CLIMB LIMIT WT (1000 LB)	188.1	187.4	186.8	186.6	186.4	186.1	185.8	185.4	177.7	170.3	155.9

2000 FT Pressure Altitude

CORR'D FIELD LENGTH (FT)	FIELD LIMIT WEIGHT (1000 LB)										
	OAT (°C)										
	-40	0	11	14	18	22	26	30	35	40	50
4000	117.0	108.6	106.5	105.9	105.2	104.4	103.7	101.8	98.9	96.0	90.3
4200	120.4	111.7	109.5	108.9	108.1	107.4	106.6	104.7	101.7	98.7	92.8
4600	127.0	117.8	115.4	114.8	114.0	113.2	112.4	110.4	107.2	104.0	97.7
5000	133.2	123.5	121.1	120.4	119.6	118.7	117.9	115.7	112.4	109.0	102.5
5400	139.1	128.9	126.4	125.7	124.8	123.9	123.1	120.8	117.3	113.8	106.9
5800	144.7	134.1	131.5	130.8	129.8	128.9	128.0	125.7	122.0	118.3	111.2
6200	150.0	139.1	136.3	135.6	134.6	133.6	132.7	130.2	126.5	122.6	115.2
6600	155.1	143.8	140.9	140.1	139.1	138.2	137.2	134.6	130.7	126.7	119.1
7000	160.1	148.4	145.4	144.6	143.6	142.5	141.5	138.9	134.9	130.7	122.8
7400	164.9	152.8	149.7	148.9	147.9	146.8	145.8	143.1	138.9	134.6	126.5
7800	169.6	157.1	153.9	153.1	152.0	150.9	149.8	147.1	142.8	138.4	130.0
8200	174.1	161.3	158.0	157.2	156.0	154.9	153.8	151.0	146.5	142.0	133.4
8600	178.4	165.3	161.9	161.1	159.9	158.8	157.6	154.7	150.2	145.5	136.6
9000	182.5	169.0	165.6	164.7	163.5	162.3	161.2	158.1	153.5	148.8	139.7
9400	186.3	172.5	169.0	168.0	166.8	165.6	164.5	161.4	156.6	151.8	142.4
9800	189.9	175.9	172.3	171.3	170.1	168.9	167.7	164.5	159.6	154.7	145.1
10200	189.9	179.1	175.5	174.5	173.2	172.0	170.8	167.5	162.6	157.5	147.8
10600	189.9	182.3	178.6	177.6	176.3	175.0	173.8	170.5	165.4	160.2	150.3
CLIMB LIMIT WT (1000 LB)	179.3	178.6	178.1	178.0	177.8	177.6	177.3	173.1	166.2	159.2	145.8

With engine bleed for packs off, increase field limit weight by 800 lb and climb limit weight by 3100 lb.
With engine anti-ice on, decrease field limit weight by 400 lb and climb limit weight by 600 lb.
With engine and wing anti-ice on (optional system), decrease field limit weight by 1700 lb and climb limit weight by 3200 lb.

Copyright © The Boeing Company. See title page for details.

Takeoff Field & Climb Limit Weights - Wet Runway
Flaps 5
4000 FT Pressure Altitude

CORR'D FIELD LENGTH (FT)	FIELD LIMIT WEIGHT (1000 LB)										
	OAT (°C)										
	-40	0	11	14	18	22	26	30	35	40	50
4000	109.3	101.4	99.4	98.9	98.2	97.6	96.2	94.6	92.1	89.4	84.4
4200	112.4	104.3	102.2	101.7	101.0	100.3	98.9	97.3	94.7	91.9	86.8
4600	118.5	109.9	107.7	107.2	106.4	105.7	104.2	102.5	99.8	96.8	91.4
5000	124.3	115.2	113.0	112.4	111.6	110.8	109.3	107.5	104.6	101.5	95.7
5400	129.8	120.3	117.9	117.3	116.5	115.7	114.1	112.2	109.2	105.9	99.9
5800	135.0	125.1	122.7	122.0	121.1	120.3	118.6	116.6	113.5	110.1	103.9
6200	140.0	129.7	127.1	126.5	125.6	124.7	122.9	120.9	117.6	114.1	107.6
6600	144.7	134.1	131.4	130.7	129.8	128.9	127.1	124.9	121.6	117.9	111.2
7000	149.3	138.3	135.6	134.8	133.9	133.0	131.1	128.9	125.4	121.6	114.7
7400	153.8	142.5	139.6	138.9	137.9	136.9	135.0	132.7	129.1	125.2	118.0
7800	158.1	146.4	143.5	142.7	141.7	140.7	138.7	136.4	132.7	128.7	121.3
8200	162.4	150.3	147.3	146.5	145.5	144.5	142.4	140.0	136.2	132.1	124.5
8600	166.4	154.0	150.9	150.1	149.1	148.0	145.9	143.5	139.6	135.3	127.5
9000	170.1	157.5	154.3	153.5	152.4	151.3	149.2	146.6	142.6	138.3	130.3
9400	173.6	160.7	157.4	156.6	155.5	154.4	152.2	149.6	145.5	141.0	132.9
9800	177.0	163.8	160.5	159.6	158.5	157.3	155.1	152.4	148.3	143.7	135.4
10200	180.3	166.8	163.4	162.5	161.4	160.2	157.9	155.2	150.9	146.3	137.8
10600	183.5	169.7	166.3	165.4	164.2	163.0	160.7	157.9	153.5	148.8	140.1
CLIMB LIMIT WT (1000 LB)	168.6	167.9	167.5	167.4	167.2	167.0	164.5	161.0	155.2	148.5	136.5

6000 FT Pressure Altitude

CORR'D FIELD LENGTH (FT)	FIELD LIMIT WEIGHT (1000 LB)										
	OAT (°C)										
	-40	0	11	14	18	22	26	30	35	40	50
4000	101.9	94.6	92.8	92.3	91.7	90.5	89.3	87.9	85.6	83.1	78.6
4200	104.8	97.2	95.4	94.9	94.2	93.0	91.8	90.3	88.0	85.4	80.8
4600	110.4	102.4	100.4	99.9	99.2	98.0	96.7	95.1	92.6	89.9	85.0
5000	115.8	107.4	105.3	104.8	104.0	102.7	101.3	99.7	97.1	94.2	89.1
5400	120.9	112.1	109.9	109.3	108.6	107.2	105.8	104.0	101.3	98.3	92.9
5800	125.7	116.6	114.3	113.7	112.9	111.5	110.0	108.2	105.3	102.2	96.6
6200	130.3	120.8	118.4	117.8	117.0	115.5	114.0	112.1	109.1	105.9	100.0
6600	134.7	124.9	122.4	121.8	120.9	119.4	117.8	115.8	112.8	109.4	103.3
7000	139.0	128.8	126.3	125.6	124.7	123.1	121.5	119.5	116.3	112.8	106.5
7400	143.2	132.6	130.0	129.3	128.4	126.8	125.1	123.0	119.7	116.1	109.7
7800	147.2	136.3	133.6	132.9	132.0	130.3	128.5	126.4	123.0	119.3	112.7
8200	151.1	139.9	137.2	136.4	135.5	133.7	131.9	129.7	126.3	122.5	115.6
8600	154.8	143.4	140.5	139.8	138.8	137.0	135.1	132.9	129.4	125.4	118.4
9000	158.3	146.5	143.6	142.9	141.8	140.0	138.1	135.8	132.2	128.2	121.0
9400	161.5	149.5	146.5	145.7	144.7	142.8	140.9	138.5	134.8	130.7	123.3
9800	164.6	152.4	149.3	148.5	147.4	145.5	143.5	141.1	137.3	133.1	125.6
10200	167.6	155.1	152.0	151.2	150.1	148.1	146.1	143.6	139.8	135.5	127.8
10600	170.6	157.8	154.6	153.8	152.7	150.7	148.6	146.1	142.2	137.8	129.9
CLIMB LIMIT WT (1000 LB)	158.1	157.5	157.2	157.1	156.9	154.8	152.5	149.3	143.6	137.3	126.7

With engine bleed for packs off, increase field limit weight by 800 lb and climb limit weight by 3100 lb.
With engine anti-ice on, decrease field limit weight by 400 lb and climb limit weight by 600 lb.
With engine and wing anti-ice on (optional system), decrease field limit weight by 1700 lb and climb limit weight by 3200 lb.

Copyright © The Boeing Company. See title page for details.

Takeoff Field & Climb Limit Weights - Wet Runway

Flaps 5

8000 FT Pressure Altitude

CORR'D FIELD LENGTH (FT)	FIELD LIMIT WEIGHT (1000 LB)										
	OAT (°C)										
	-40	0	11	14	18	22	26	30	35	40	50
4000	95.0	88.3	86.6	86.2	85.2	84.1	82.8	81.2	78.8	76.6	72.5
4200	97.7	90.7	89.0	88.6	87.5	86.4	85.1	83.4	81.0	78.7	74.5
4600	102.9	95.5	93.7	93.3	92.1	91.0	89.6	87.8	85.2	82.8	78.3
5000	107.9	100.1	98.2	97.7	96.6	95.3	93.9	92.0	89.3	86.7	82.0
5400	112.6	104.5	102.5	102.0	100.8	99.5	97.9	96.0	93.1	90.5	85.6
5800	117.1	108.7	106.6	106.1	104.8	103.4	101.8	99.8	96.8	94.0	88.9
6200	121.3	112.6	110.5	109.9	108.5	107.2	105.5	103.4	100.3	97.4	92.1
6600	125.4	116.3	114.1	113.5	112.2	110.7	109.0	106.8	103.6	100.6	95.1
7000	129.4	120.0	117.7	117.1	115.7	114.2	112.4	110.1	106.8	103.7	98.0
7400	133.2	123.6	121.2	120.6	119.1	117.6	115.7	113.4	110.0	106.8	100.9
7800	136.9	127.0	124.5	123.9	122.4	120.8	118.9	116.5	113.0	109.7	103.7
8200	140.6	130.3	127.8	127.1	125.6	124.0	122.0	119.5	115.9	112.6	106.4
8600	144.0	133.5	130.9	130.3	128.6	127.0	125.0	122.5	118.8	115.3	108.9
9000	147.2	136.4	133.8	133.1	131.4	129.7	127.7	125.1	121.3	117.8	111.2
9400	150.2	139.1	136.4	135.7	134.0	132.3	130.2	127.5	123.7	120.0	113.3
9800	153.0	141.8	139.0	138.3	136.6	134.8	132.6	129.9	125.9	122.2	115.4
10200	155.8	144.3	141.5	140.8	139.0	137.2	135.0	132.2	128.1	124.3	117.4
10600	158.5	146.8	143.9	143.1	141.3	139.5	137.3	134.4	130.3	126.4	119.3
CLIMB LIMIT WT (1000 LB)	148.0	147.4	147.2	147.0	145.3	143.4	140.6	136.5	130.7	125.3	115.7

10000 FT Pressure Altitude

CORR'D FIELD LENGTH (FT)	FIELD LIMIT WEIGHT (1000 LB)										
	OAT (°C)										
	-40	0	11	14	18	22	26	30	35	40	50
4000	88.7	82.4	80.8	80.0	79.0	78.0	76.8	75.2	73.0	70.8	66.5
4200	91.2	84.7	83.0	82.2	81.2	80.1	78.9	77.3	75.0	72.7	68.3
4600	96.0	89.1	87.4	86.5	85.4	84.3	83.0	81.3	78.9	76.5	71.8
5000	100.7	93.4	91.5	90.6	89.5	88.3	87.0	85.1	82.6	80.1	75.1
5400	105.0	97.5	95.5	94.6	93.4	92.1	90.7	88.8	86.1	83.5	78.3
5800	109.2	101.3	99.3	98.3	97.1	95.8	94.3	92.3	89.5	86.8	81.4
6200	113.2	105.0	102.8	101.8	100.5	99.2	97.7	95.6	92.7	89.9	84.3
6600	117.0	108.4	106.2	105.2	103.9	102.5	100.9	98.8	95.8	92.8	87.0
7000	120.6	111.8	109.6	108.5	107.1	105.7	104.0	101.8	98.7	95.6	89.7
7400	124.2	115.1	112.8	111.7	110.2	108.8	107.1	104.8	101.6	98.4	92.3
7800	127.6	118.3	115.9	114.7	113.3	111.8	110.0	107.7	104.4	101.1	94.8
8200	131.0	121.4	118.9	117.7	116.2	114.7	112.9	110.5	107.1	103.7	97.2
8600	134.2	124.3	121.8	120.6	119.0	117.5	115.6	113.1	109.6	106.2	99.5
9000	137.2	127.0	124.4	123.2	121.6	120.0	118.1	115.5	112.0	108.5	101.6
9400	139.9	129.5	126.9	125.6	124.0	122.3	120.4	117.8	114.1	110.5	103.5
9800	142.5	131.9	129.2	127.9	126.3	124.6	122.6	119.9	116.2	112.5	105.3
10200	145.1	134.3	131.5	130.2	128.5	126.7	124.7	122.0	118.2	114.4	107.1
10600	147.6	136.5	133.7	132.3	130.6	128.8	126.8	124.0	120.1	116.3	108.8
CLIMB LIMIT WT (1000 LB)	138.8	137.9	137.2	136.0	134.3	132.4	129.7	125.8	120.3	115.1	104.9

With engine bleed for packs off, increase field limit weight by 800 lb and climb limit weight by 3100 lb.
With engine anti-ice on, decrease field limit weight by 400 lb and climb limit weight by 600 lb.
With engine and wing anti-ice on (optional system), decrease field limit weight by 1700 lb and climb limit weight by 3200 lb.

Copyright © The Boeing Company. See title page for details.

Takeoff Obstacle Limit Weight
Flaps 5
Sea Level 30°C & Below, Zero Wind
Based on engine bleed for packs on and anti-ice off
Reference Obstacle Limit Weight (1000 LB)

OBSTACLE HEIGHT (FT)	DISTANCE FROM BRAKE RELEASE (1000 FT)								
	8	10	12	14	16	18	20	22	24
10	157.5	175.5	188.6						
50	147.5	163.9	176.8	186.3					
100	138.4	153.9	166.1	175.5	182.9	187.9			
150	131.4	146.1	158.0	167.3	174.7	180.7	185.3	188.6	
200	125.4	139.7	151.3	160.6	168.1	174.2	179.2	183.2	186.5
250	120.2	134.2	145.5	154.8	162.4	168.6	173.8	178.1	181.7
300	115.6	129.3	140.4	149.6	157.3	163.6	168.9	173.4	177.2
350	111.4	124.9	135.8	145.0	152.7	159.1	164.6	169.2	173.1
400	107.5	120.8	131.7	140.8	148.5	155.0	160.5	165.3	169.3
450	103.9	117.2	127.9	136.9	144.6	151.2	156.8	161.6	165.8
500	100.6	113.7	124.4	133.4	141.0	147.6	153.3	158.2	162.5
550	97.5	110.6	121.2	130.1	137.7	144.3	150.0	155.0	159.3
600	94.6	107.6	118.1	127.0	134.6	141.1	146.9	151.9	156.3
650	91.9	104.7	115.2	124.1	131.6	138.2	144.0	149.0	153.5
700		102.1	112.5	121.3	128.9	135.4	141.2	146.3	150.8
750		99.5	109.9	118.7	126.2	132.8	138.6	143.7	148.3
800		97.2	107.5	116.2	123.7	130.3	136.1	141.2	145.8
850		94.9	105.2	113.9	121.3	127.9	133.7	138.8	143.4
900		92.7	102.9	111.6	119.1	125.6	131.4	136.6	141.2
950		90.7	100.8	109.4	116.9	123.4	129.2	134.4	139.0
1000			98.8	107.4	114.8	121.3	127.1	132.3	136.9

Obstacle height must be calculated from lowest point of the runway to conservatively account for runway slope.

OAT Adjustments

OAT (°C)	REFERENCE OBSTACLE LIMIT WEIGHT (1000 LB)					
	90	110	130	150	170	190
30 & BELOW	0	0	0	0	0	0
32	-1.3	-1.7	-2.0	-2.3	-2.7	-3.0
34	-2.6	-3.3	-4.0	-4.7	-5.4	-6.0
36	-4.0	-5.0	-6.0	-7.0	-8.0	-9.1
38	-5.3	-6.6	-8.0	-9.4	-10.7	-12.1
40	-6.5	-8.2	-9.9	-11.6	-13.3	-14.9
42	-7.7	-9.8	-11.8	-13.8	-15.8	-17.8
44	-9.0	-11.3	-13.6	-16.0	-18.3	-20.7
46	-10.2	-12.9	-15.5	-18.2	-20.8	-23.5
48	-11.4	-14.4	-17.4	-20.4	-23.4	-26.3
50	-12.7	-16.0	-19.3	-22.6	-25.9	-29.2

Copyright © The Boeing Company. See title page for details.

Takeoff Obstacle Limit Weight

Flaps 5

Sea Level 30°C & Below, Zero Wind

Based on engine bleed for packs on and anti-ice off

Pressure Altitude Adjustments

ALT (FT)	OAT ADJUSTED OBSTACLE LIMIT WEIGHT (1000 LB)					
	90	110	130	150	170	190
S.L.& BELOW	0	0	0	0	0	0
1000	-3.3	-4.0	-4.6	-5.3	-6.0	-6.7
2000	-6.5	-7.9	-9.3	-10.6	-12.0	-13.4
3000	-9.6	-11.6	-13.7	-15.7	-17.8	-19.8
4000	-12.6	-15.3	-18.1	-20.8	-23.5	-26.2
5000	-15.5	-18.8	-22.2	-25.6	-29.0	-32.3
6000	-18.3	-22.4	-26.4	-30.4	-34.4	-38.4
7000	-20.9	-25.6	-30.3	-35.1	-39.8	-44.5
8000	-23.4	-28.9	-34.3	-39.8	-45.2	-50.6
9000	-26.0	-32.0	-38.0	-44.0	-50.1	-56.1
10000	-28.5	-35.1	-41.7	-48.3	-54.9	-61.5

Wind Adjustments

WIND (KTS)	OAT & ALT ADJUSTED OBSTACLE LIMIT WEIGHT (1000 LB)					
	90	110	130	150	170	190
15 TW	-19.2	-18.8	-18.3	-17.9	-17.4	-16.9
10 TW	-12.8	-12.5	-12.2	-11.9	-11.6	-11.3
5 TW	-6.4	-6.3	-6.1	-6.0	-5.8	-5.6
0	0	0	0	0	0	0
10 HW	2.3	2.1	1.9	1.7	1.5	1.3
20 HW	4.5	4.1	3.8	3.4	3.0	2.6
30 HW	7.0	6.5	5.9	5.3	4.7	4.1
40 HW	9.5	8.8	8.0	7.2	6.4	5.6

With engine bleed for packs off, increase weight by 1400 lb.
With engine anti-ice on, decrease weight by 700 lb.
With engine and wing anti-ice on, decrease weight by 3300 lb (optional system).

Copyright © The Boeing Company. See title page for details.

Tire Speed Limit Weight

Flaps 5 Limit Weight (1000 LB)

OAT (°C)	AIRPORT PRESSURE ALTITUDE (FT)					
	0	2000	4000	6000	8000	10000
54	190.0	187.8	173.3	159.8	147.2	
52	190.0	189.0	174.5	160.9	148.2	
50	190.0	190.0	175.7	162.0	149.2	137.6
48	190.0	190.0	176.9	163.1	150.3	138.5
46	190.0	190.0	178.2	164.3	151.3	139.4
44	190.0	190.0	179.4	165.4	152.4	140.3
42	190.0	190.0	180.7	166.6	153.4	141.3
40	190.0	190.0	182.0	167.7	154.5	142.2
38	190.0	190.0	183.3	169.0	155.6	143.2
36	190.0	190.0	184.6	170.2	156.7	144.3
34	190.0	190.0	186.0	171.4	157.8	145.3
32	190.0	190.0	187.3	172.7	159.0	146.3
30	190.0	190.0	188.7	173.9	160.1	147.4
28	190.0	190.0	190.0	175.2	161.3	148.5
26	190.0	190.0	190.0	176.5	162.5	149.6
24	190.0	190.0	190.0	177.8	163.7	150.7
22	190.0	190.0	190.0	179.1	164.9	151.8
20	190.0	190.0	190.0	180.4	166.1	152.9
18	190.0	190.0	190.0	181.8	167.4	154.0
16	190.0	190.0	190.0	183.1	168.6	155.2
14	190.0	190.0	190.0	184.5	169.9	156.3
12	190.0	190.0	190.0	185.9	171.2	157.5
10	190.0	190.0	190.0	187.3	172.5	158.7
-40	190.0	190.0	190.0	190.0	190.0	190.0

Increase tire speed limit weight by 1200 lb per knot headwind.
Decrease tire speed limit weight by 2500 lb per knot tailwind.

Copyright © The Boeing Company. See title page for details.

Brake Energy Limits VMBE

Maximum Brake Energy Speed

OAT (°C)	REFERENCE VMBE (KIAS)						
	PRESSURE ALTITUDE (FT)						
		TO BE SUPPLIED					

Weight Adjusted VMBE

WEIGHT (1000 LB)	REFERENCE VMBE (KIAS)										
				TO BE SUPPLIED							

Copyright © The Boeing Company. See title page for details.

Long Range Cruise Maximum Operating Altitude

Max Cruise Thrust

ISA + 10°C and Below

WEIGHT (1000 LB)	OPTIMUM ALT (FT)	TAT (°C)	MARGIN TO INITIAL BUFFET 'G' (BANK ANGLE)				
			1.20 (33°)	1.25 (36°)	1.30 (39°)	1.40 (44°)	1.50 (48°)
190	30000	-5	31900*	31900*	31900*	31500	30100
180	31200	-7	33500*	33500*	33500*	32600	31300
170	32400	-10	35000*	35000*	35000*	33900	32500
160	33700	-13	36300*	36300*	36300*	35100	33800
150	35100	-16	37600*	37600*	37600*	36500	35100
140	36500	-18	38900*	38900*	38900*	37900	36600
130	38100	-18	40300*	40300*	40300*	39500	38100
120	39700	-18	41000	41000	41000	41000	39800
110	41000	-18	41000	41000	41000	41000	41000
100	41000	-18	41000	41000	41000	41000	41000
90	41000	-18	41000	41000	41000	41000	41000

ISA + 15°C

WEIGHT (1000 LB)	OPTIMUM ALT (FT)	TAT (°C)	MARGIN TO INITIAL BUFFET 'G' (BANK ANGLE)				
			1.20 (33°)	1.25 (36°)	1.30 (39°)	1.40 (44°)	1.50 (48°)
190	30000	1	29300*	29300*	29300*	29300*	29300*
180	31200	-2	31500*	31500*	31500*	31500*	31300
170	32400	-4	33600*	33600*	33600*	33600*	32500
160	33700	-7	35300*	35300*	35300*	35100	33800
150	35100	-10	36700*	36700*	36700*	36500	35100
140	36500	-13	38000*	38000*	38000*	37900	36600
130	38100	-13	39300*	39300*	39300*	39300*	38100
120	39700	-13	40700*	40700*	40700*	40700*	39800
110	41000	-13	41000	41000	41000	41000	41000
100	41000	-13	41000	41000	41000	41000	41000
90	41000	-13	41000	41000	41000	41000	41000

ISA + 20°C

WEIGHT (1000 LB)	OPTIMUM ALT (FT)	TAT (°C)	MARGIN TO INITIAL BUFFET 'G' (BANK ANGLE)				
			1.20 (33°)	1.25 (36°)	1.30 (39°)	1.40 (44°)	1.50 (48°)
190	30000	7	26000*	26000*	26000*	26000*	26000*
180	31200	4	28200*	28200*	28200*	28200*	28200*
170	32400	1	30600*	30600*	30600*	30600*	30600*
160	33700	-2	33200*	33200*	33200*	33200*	33200*
150	35100	-5	35200*	35200*	35200*	35200*	35100
140	36500	-7	36600*	36600*	36600*	36600*	36600
130	38100	-7	38000*	38000*	38000*	38000*	38000*
120	39700	-7	39400*	39400*	39400*	39400*	39400*
110	41000	-7	40900*	40900*	40900*	40900*	40900*
100	41000	-7	41000	41000	41000	41000	41000
90	41000	-7	41000	41000	41000	41000	41000

***Denotes altitude thrust limited in level flight, 100 fpm residual rate of climb.**

Copyright © The Boeing Company. See title page for details.

Long Range Cruise Trip Fuel and Time

Ground to Air Miles Conversion

AIR DISTANCE (NM)					GROUND DISTANCE (NM)	AIR DISTANCE (NM)				
HEADWIND COMPONENT (KTS)						TAILWIND COMPONENT (KTS)				
100	80	60	40	20		20	40	60	80	100
276	257	240	225	212	200	190	181	173	165	158
544	508	475	447	423	400	381	364	348	333	320
810	758	711	670	633	600	572	547	523	502	482
1077	1008	946	892	844	800	763	730	699	670	645
1342	1258	1181	1114	1054	1000	955	913	874	839	807
1606	1506	1416	1336	1265	1200	1146	1096	1050	1008	969
1870	1754	1650	1557	1475	1400	1337	1279	1225	1176	1132
2133	2002	1883	1779	1685	1600	1528	1462	1401	1345	1295
2395	2249	2117	2000	1895	1800	1720	1645	1577	1514	1458
2657	2496	2350	2221	2105	2000	1911	1829	1753	1684	1621
2917	2741	2582	2441	2315	2200	2103	2012	1929	1853	1784
3177	2987	2814	2661	2525	2400	2294	2196	2106	2023	1948
3437	3232	3046	2882	2735	2600	2486	2380	2282	2193	2111
3696	3477	3278	3102	2944	2800	2677	2563	2458	2362	2275
3955	3721	3509	3322	3154	3000	2869	2747	2635	2532	2439
4213	3966	3741	3542	3363	3200	3061	2931	2812	2703	2603
4471	4210	3972	3762	3573	3400	3252	3115	2989	2873	2767
4729	4454	4203	3981	3782	3600	3444	3299	3166	3043	2931
4986	4697	4434	4201	3992	3800	3636	3483	3343	3213	3096
5243	4940	4665	4420	4201	4000	3828	3668	3520	3384	3260
5500	5183	4895	4640	4410	4200	4019	3852	3696	3554	3424
5756	5426	5126	4859	4620	4400	4211	4036	3873	3724	3589
6011	5669	5356	5079	4829	4600	4403	4220	4050	3895	3753
6267	5911	5586	5298	5038	4800	4595	4404	4227	4065	3918
6522	6153	5816	5517	5247	5000	4786	4588	4404	4236	4082

Copyright © The Boeing Company. See title page for details.

Long Range Cruise Trip Fuel and Time

Reference Fuel and Time Required

AIR DIST (NM)	PRESSURE ALTITUDE (1000 FT)									
	29		31		33		35		37	
	FUEL (1000 LB)	TIME (HR:MIN)	FUEL (1000 LB)	TIME (HR:MIN)	FUEL (1000 LB)	TIME (HR:MIN)	FUEL (1000 LB)	TIME (HR:MIN)	FUEL (1000 LB)	TIME (HR:MIN)
200	3.7	0:38	3.7	0:38	3.7	0:37	3.7	0:38	3.7	0:38
400	6.3	1:06	6.2	1:05	6.2	1:05	6.1	1:04	6.1	1:04
600	8.8	1:35	8.7	1:33	8.6	1:32	8.5	1:31	8.4	1:31
800	11.4	2:03	11.2	2:01	11.0	1:59	10.9	1:58	10.8	1:57
1000	14.1	2:31	13.8	2:28	13.5	2:26	13.3	2:25	13.2	2:24
1200	16.8	2:59	16.4	2:55	16.1	2:53	15.8	2:51	15.7	2:50
1400	19.5	3:26	19.1	3:22	18.6	3:20	18.3	3:18	18.3	3:17
1600	22.2	3:54	21.7	3:50	21.2	3:47	20.8	3:44	20.8	3:43
1800	24.9	4:21	24.3	4:17	23.8	4:13	23.3	4:11	23.3	4:09
2000	27.6	4:49	27.0	4:44	26.3	4:40	25.8	4:38	25.8	4:36
2200	30.5	5:15	29.7	5:10	29.0	5:06	28.5	5:04		
2400	33.3	5:42	32.5	5:37	31.8	5:33	31.3	5:30		
2600	36.2	6:09	35.3	6:03	34.5	5:59	34.0	5:57		
2800	39.0	6:36	38.1	6:30	37.2	6:25	36.7	6:23		
3000	41.9	7:03	40.9	6:56	39.9	6:52	39.4	6:49		
3200	44.9	7:29	43.8	7:23	42.9	7:18				
3400	47.9	7:56	46.8	7:49	45.8	7:44				
3600	51.0	8:22	49.7	8:15	48.7	8:10				
3800	54.0	8:48	52.7	8:41	51.7	8:36				
4000	57.0	9:15	55.6	9:07	54.6	9:02				
4200	60.2	9:40	58.8	9:33						
4400	63.4	10:06	62.0	9:59						
4600	66.6	10:32	65.2	10:25						
4800	69.8	10:58	68.3	10:51						
5000	73.1	11:24	71.5	11:17						

Fuel Required Adjustments (1000 LB)

REFERENCE FUEL REQUIRED (1000 LB)	LANDING WEIGHT (1000 LB)				
	90	110	130	150	170
5	-0.8	-0.4	0.0	0.5	1.0
10	-1.6	-0.8	0.0	0.9	2.1
15	-2.4	-1.3	0.0	1.4	3.3
20	-3.2	-1.7	0.0	2.0	4.6
25	-4.0	-2.1	0.0	2.6	5.9
30	-4.8	-2.5	0.0	3.2	7.4
35	-5.6	-2.9	0.0	3.8	9.0
40	-6.4	-3.3	0.0	4.6	10.7
45	-7.2	-3.7	0.0	5.3	12.4
50	-8.0	-4.1	0.0	6.1	14.3
55	-8.8	-4.5	0.0	7.0	16.3
60	-9.6	-4.9	0.0	7.9	18.3
65	-10.4	-5.3	0.0	8.8	20.5
70	-11.2	-5.7	0.0	9.8	22.8
75	-12.0	-6.1	0.0	10.8	25.1
80	-12.8	-6.5	0.0	11.9	27.6

Based on 280/.78 climb, Long Range Cruise and .78/280/250 descent.

Copyright © The Boeing Company. See title page for details.

Long Range Cruise Step Climb

Ground to Air Miles Conversion

AIR DISTANCE (NM)					GROUND DISTANCE (NM)	AIR DISTANCE (NM)				
HEADWIND COMPONENT (KTS)						TAILWIND COMPONENT (KTS)				
100	80	60	40	20		20	40	60	80	100
1317	1239	1169	1107	1051	1000	954	912	874	838	806
1832	1725	1631	1546	1469	1400	1337	1279	1227	1178	1133
2346	2212	2092	1985	1888	1800	1720	1647	1580	1518	1460
2859	2698	2553	2424	2306	2200	2103	2014	1933	1857	1788
3372	3183	3014	2862	2725	2600	2486	2382	2286	2197	2115
3885	3669	3475	3301	3143	3000	2869	2749	2639	2538	2443
4397	4154	3936	3739	3562	3400	3252	3117	2993	2878	2771
4909	4638	4396	4178	3980	3800	3636	3485	3346	3218	3100
5421	5123	4856	4616	4398	4200	4019	3853	3700	3559	3428
5932	5607	5316	5054	4816	4600	4402	4221	4054	3900	3757
6443	6091	5776	5492	5234	5000	4786	4589	4408	4240	4085

Trip Fuel and Time Required

AIR DIST (NM)	TRIP FUEL (1000 LB)							TIME (HRS:MIN)
	LANDING WEIGHT (1000 LB)							
	90	100	110	120	130	140	150	
1000	10.4	11.0	11.7	12.4	13.3	14.0	14.8	2:25
1400	14.2	15.0	15.9	17.1	18.2	19.2	20.4	3:18
1800	18.0	19.1	20.3	21.8	23.3	24.6	26.1	4:11
2200	22.0	23.3	24.9	26.7	28.5	30.2	32.1	5:04
2600	26.0	27.6	29.6	31.7	33.9	35.9	38.2	5:57
3000	30.1	32.1	34.4	36.9	39.4	41.9	44.5	6:50
3400	34.4	36.7	39.4	42.2	45.2	48.0	50.9	7:43
3800	38.7	41.5	44.5	47.7	51.1	54.3	57.6	8:35
4200	43.2	46.4	49.7	53.4	57.1	60.7	64.5	9:28
4600	47.9	51.4	55.2	59.3	63.4	67.4	71.6	10:20
5000	52.7	56.5	60.8	65.3	69.8	74.3	78.9	11:12

Based on 280/.78 climb, Long Range Cruise, and .78/280/250 descent.
Valid for all pressure altitudes with 4000 ft step climb to 2000 ft above optimum altitude.

Copyright © The Boeing Company. See title page for details.

Short Trip Fuel and Time

Ground to Air Miles Conversion

AIR DISTANCE (NM) HEADWIND COMPONENT (KTS)					GROUND DISTANCE (NM)	AIR DISTANCE (NM) TAILWIND COMPONENT (KTS)				
100	80	60	40	20		20	40	60	80	100
94	80	69	61	55	50	46	42	39	36	34
160	143	129	118	108	100	93	87	82	77	73
226	205	188	173	161	150	141	132	125	118	112
291	267	246	229	213	200	188	178	168	160	152
354	327	304	283	266	250	236	224	213	202	193
417	387	361	338	318	300	284	270	257	245	234
480	447	418	392	370	350	332	316	301	288	276
543	507	475	447	422	400	380	362	345	330	317
607	567	533	502	475	450	428	408	390	373	358
673	629	591	557	527	500	476	453	433	415	398

Trip Fuel and Time Required

AIR DIST (NM)		LANDING WEIGHT (1000 LB)					TIME (HRS:MIN)
		90	110	130	150	170	
50	FUEL (1000 LB)	1.2	1.3	1.5	1.6	1.7	0:14
	ALT (FT)	12000	11000	9000	8000	7000	
100	FUEL (1000 LB)	1.9	2.1	2.3	2.5	2.7	0:23
	ALT (FT)	19000	17000	17000	16000	15000	
150	FUEL (1000 LB)	2.5	2.7	3.0	3.3	3.5	0:30
	ALT (FT)	25000	24000	23000	22000	20000	
200	FUEL (1000 LB)	3.0	3.3	3.7	4.0	4.3	0:37
	ALT (FT)	31000	27000	26000	26000	24000	
250	FUEL (1000 LB)	3.5	3.9	4.3	4.7	5.1	0:44
	ALT (FT)	39000	35000	31000	31000	27000	
300	FUEL (1000 LB)	3.9	4.4	4.9	5.4	5.8	0:50
	ALT (FT)	41000	39000	35000	33000	29000	
350	FUEL (1000 LB)	4.4	4.9	5.5	6.0	6.6	0:57
	ALT (FT)	41000	39000	37000	33000	31000	
400	FUEL (1000 LB)	4.8	5.4	6.0	6.7	7.3	1:03
	ALT (FT)	41000	39000	37000	33000	31000	
450	FUEL (1000 LB)	5.3	5.9	6.6	7.3	8.1	1:10
	ALT (FT)	41000	41000	37000	35000	31000	
500	FUEL (1000 LB)	5.7	6.4	7.2	8.0	8.8	1:17
	ALT (FT)	41000	41000	37000	35000	31000	

Based on 280/.78 climb, Long Range Cruise, and .78/280/250 descent.

Copyright © The Boeing Company. See title page for details.

Holding Planning

Flaps Up

WEIGHT (1000 LB)	TOTAL FUEL FLOW (LB/HR)								
	PRESSURE ALTITUDE (FT)								
	1500	5000	10000	15000	20000	25000	30000	35000	41000
190	6890	6790	6760	6720	6690	6750	7040		
180	6560	6460	6400	6370	6300	6360	6570		
170	6240	6130	6060	6030	5930	5970	6140	6640	
160	5910	5800	5720	5680	5580	5590	5740	6040	
150	5590	5480	5400	5330	5240	5200	5340	5540	
140	5260	5150	5070	4990	4910	4830	4950	5080	
130	4940	4830	4740	4660	4580	4470	4570	4670	5360
120	4620	4510	4420	4330	4250	4140	4190	4270	4690
110	4310	4190	4090	4000	3920	3830	3880	3940	4220
100	4010	3880	3770	3750	3660	3590	3540	3570	3770
90	3800	3670	3540	3440	3350	3280	3240	3210	3360

This table includes 5% additional fuel for holding in a racetrack pattern.

Crew Oxygen Requirements

Required Pressure (PSI) for 76 Cubic FT Cylinder

BOTTLE TEMPERATURE		NUMBER OF CREW USING OXYGEN		
°C	°F	2	3	4
50	122	735	1055	1360
45	113	725	1040	1340
40	104	715	1020	1320
35	92	700	1005	1300
30	86	690	990	1280
25	77	680	975	1255
20	68	670	960	1240
15	59	655	940	1215
10	50	645	925	1195
5	41	635	910	1175
0	32	620	890	1150
-5	23	610	875	1130
-10	14	600	860	1110

Required Pressure (PSI) for 114/115 Cubic FT Cylinder

BOTTLE TEMPERATURE		NUMBER OF CREW USING OXYGEN		
°C	°F	2	3	4
50	122	530	735	945
45	113	520	725	930
40	104	510	715	915
35	92	505	700	900
30	86	495	690	885
25	77	485	680	870
20	68	480	670	860
15	59	470	655	840
10	50	460	645	830
5	41	455	635	815
0	32	445	620	800
-5	23	440	610	785
-10	14	430	600	770

Copyright © The Boeing Company. See title page for details.

ENGINE INOP

MAX CONTINUOUS THRUST

Net Level Off Weight

PRESSURE ALTITUDE (1000 FT)	LEVEL OFF WEIGHT (1000 LB)		
	ISA + 10°C & BELOW	ISA + 15°C	ISA + 20°C
30	92.5		
28	100.7	97.7	94.6
26	109.5	106.1	102.9
24	119.0	115.2	111.6
22	129.2	124.9	120.8
20	140.0	135.3	130.7
18	151.0	145.6	140.1
16	161.6	156.2	151.0
14	170.0	166.2	161.9
12	181.5	176.5	170.2

Anti-Ice Adjustments

ANTI-ICE CONFIGURATION	LEVEL OFF WEIGHT ADJUSTMENT (1000 LB)									
	PRESSURE ALTITUDE (1000 FT)									
	12	14	16	18	20	22	24	26	28	30
ENGINE ONLY	-3.9	-3.7	-3.7	-3.7	-3.3	-3.2	-3.0	-2.7	-2.5	-1.7
ENGINE & WING	-15.4	-14.7	-14.2	-14.4	-13.3	-12.1	-11.0	-10.2	-9.3	

Copyright © The Boeing Company. See title page for details.

ALL ENGINES

Long Range Cruise Critical Fuel Reserves

Ground to Air Miles Conversion

AIR DISTANCE (NM) HEADWIND COMPONENT (KTS)					GROUND DISTANCE (NM)	AIR DISTANCE (NM) TAILWIND COMPONENT (KTS)				
100	80	60	40	20		20	40	60	80	100
287	264	244	228	213	200	189	178	169	161	154
582	533	492	457	427	400	376	356	337	320	305
877	803	740	687	640	600	564	533	504	479	456
1172	1072	988	916	854	800	752	710	672	638	607
1467	1341	1236	1146	1068	1000	940	887	840	797	759
1762	1611	1484	1375	1282	1200	1128	1064	1007	956	910
2057	1880	1732	1605	1496	1400	1316	1241	1175	1115	1061
2352	2150	1980	1835	1709	1600	1504	1419	1343	1274	1212
2647	2419	2228	2064	1923	1800	1692	1596	1510	1433	1364

Critical Fuel (1000 LB)

AIR DIST (NM)	WEIGHT AT CRITICAL POINT (1000 LB)									
	100	110	120	130	140	150	160	170	180	190
200	4.2	4.4	4.5	4.7	4.8	5.0	5.1	5.3	5.4	5.6
300	5.9	6.1	6.3	6.5	6.7	6.9	7.1	7.3	7.5	7.7
400	7.7	7.9	8.1	8.4	8.6	8.9	9.2	9.4	9.7	9.9
500	9.4	9.6	9.9	10.2	10.5	10.9	11.2	11.5	11.8	12.1
600	11.1	11.4	11.8	12.1	12.5	12.8	13.2	13.6	13.9	14.3
700	12.8	13.1	13.5	13.9	14.3	14.7	15.2	15.6	16.0	16.5
800	14.5	14.8	15.3	15.7	16.2	16.7	17.1	17.6	18.1	18.6
900	16.2	16.5	17.0	17.5	18.0	18.6	19.1	19.7	20.2	20.7
1000	17.9	18.2	18.8	19.3	19.9	20.5	21.1	21.7	22.3	22.9
1100	19.6	20.0	20.6	21.2	21.8	22.4	23.0	23.7	24.3	25.0
1200	21.3	21.7	22.3	22.9	23.6	24.3	25.0	25.7	26.4	27.1
1300	23.0	23.4	24.0	24.7	25.4	26.1	26.9	27.6	28.4	29.1
1400	24.7	25.1	25.7	26.5	27.2	28.0	28.8	29.6	30.4	31.2
1500	26.4	26.8	27.4	28.2	29.0	29.8	30.7	31.6	32.5	33.3
1600	28.1	28.5	29.1	30.0	30.8	31.7	32.6	33.5	34.4	35.3
1700	29.8	30.2	30.8	31.7	32.6	33.5	34.5	35.4	36.4	37.4
1800	31.5	31.9	32.5	33.4	34.4	35.3	36.3	37.3	38.4	39.4

Based on: Emergency descent to 10000 ft. Level cruise at 10000 ft. 250 KIAS descent to 1500 ft. 15 minute hold at 1500 ft. One missed approach; approach and land. 5% allowance for wind errors.
Increase fuel required by 0.5% per 10°C above ISA.
If icing conditions exist, increase fuel by 14% to account for engine and wing anti-ice on (7%) and ice accumulation on unheated surfaces (7%).
Allowance for performance deterioration not included.
Compare the fuel required for all engine and engine inoperative critical fuel reserves and use the higher of the two.

Copyright © The Boeing Company. See title page for details.

ENGINE INOP

Long Range Cruise Critical Fuel Reserves
Ground to Air Miles Conversion

AIR DISTANCE (NM) HEADWIND COMPONENT (KTS)					GROUND DISTANCE (NM)	AIR DISTANCE (NM) TAILWIND COMPONENT (KTS)				
100	80	60	40	20		20	40	60	80	100
291	267	246	229	213	200	188	178	168	160	152
591	539	496	459	428	400	376	354	335	318	302
890	812	746	690	642	600	563	531	502	476	452
1190	1085	996	921	856	800	751	707	668	634	602
1490	1357	1246	1152	1070	1000	938	884	835	792	752
1790	1630	1496	1382	1285	1200	1126	1060	1002	950	902
2090	1903	1746	1613	1499	1400	1313	1237	1169	1107	1052
2390	2175	1996	1844	1713	1600	1501	1413	1335	1265	1203
2690	2448	2246	2075	1928	1800	1688	1590	1502	1423	1353

Critical Fuel (1000 LB)

AIR DIST (NM)	WEIGHT AT CRITICAL POINT (1000 LB)									
	100	110	120	130	140	150	160	170	180	190
200	3.7	3.9	4.1	4.2	4.4	4.5	4.7	4.8	5.0	5.2
300	5.3	5.5	5.7	5.9	6.1	6.4	6.6	6.8	7.0	7.2
400	6.8	7.1	7.3	7.6	7.9	8.2	8.5	8.8	9.0	9.3
500	8.3	8.6	9.0	9.3	9.7	10.0	10.4	10.7	11.1	11.4
600	9.8	10.2	10.6	11.0	11.5	11.9	12.3	12.7	13.1	13.5
700	11.3	11.8	12.3	12.7	13.2	13.6	14.1	14.6	15.0	15.5
800	12.9	13.3	13.9	14.4	14.9	15.4	15.9	16.5	17.0	17.5
900	14.4	14.9	15.4	16.0	16.6	17.2	17.8	18.4	18.9	19.5
1000	15.9	16.4	17.0	17.7	18.3	19.0	19.6	20.3	20.9	21.6
1100	17.4	17.9	18.6	19.3	20.0	20.7	21.4	22.1	22.8	23.5
1200	19.0	19.4	20.2	21.0	21.7	22.5	23.2	24.0	24.7	25.5
1300	20.5	20.9	21.8	22.6	23.4	24.2	25.0	25.8	26.6	27.5
1400	22.0	22.5	23.3	24.2	25.0	25.9	26.8	27.7	28.5	29.4
1500	23.5	24.0	24.8	25.7	26.7	27.6	28.6	29.5	30.4	31.4
1600	25.0	25.5	26.3	27.3	28.3	29.3	30.3	31.3	32.3	33.3
1700	26.6	27.0	27.9	28.9	30.0	31.0	32.1	33.1	34.2	35.2
1800	28.1	28.5	29.4	30.5	31.6	32.7	33.8	34.9	36.0	37.1

Based on: Emergency descent to 10000 ft. Level cruise at 10000 ft. 250 KIAS descent to 1500 ft. 15 minute hold at 1500 ft. One missed approach; approach and land. 5% allowance for wind errors.
Increase fuel required by 0.5% per 10°C above ISA.
If icing conditions exist, increase fuel by 15% to account for engine and wing anti-ice on (6%) and ice accumulation on unheated surfaces (9%).
Allowance for performance deterioration not included.
Compare the fuel required from this table with critical fuel reserves for all engines operative and use the higher of the two.

Copyright © The Boeing Company. See title page for details.

Intentionally
Blank

Copyright © The Boeing Company. See title page for details.

Landing Field Limit Weight
Flaps 40
Wind Corrected Field Length (FT)

FIELD LENGTH AVAILABLE (FT)	WIND COMPONENT (KTS)							
	-15	-10	-5	0	10	20	30	40
3000			2640	3000	3200	3420	3630	3860
3400		2650	3020	3400	3620	3840	4070	4310
3800	2660	3020	3400	3800	4030	4260	4500	4750
4200	3010	3380	3770	4200	4440	4680	4940	5200
4600	3370	3740	4150	4600	4850	5110	5380	5650
5000	3730	4100	4530	5000	5260	5530	5810	6100
5400	4090	4470	4910	5400	5670	5950	6250	6550
5800	4440	4830	5280	5800	6080	6380	6680	7000
6200	4800	5190	5660	6200	6500	6800	7120	7440
6600	5160	5560	6040	6600	6910	7220	7550	7890
7000	5510	5920	6410	7000	7320	7650	7990	8340
7400	5870	6280	6790	7400	7730	8070	8420	8790
7800	6230	6640	7170	7800	8140	8490	8860	9240
8200	6590	7010	7550	8200	8550	8920	9300	9690
8600	6940	7370	7920	8600	8960	9340	9730	10140
9000	7300	7730	8300	9000	9370	9760	10170	10580
9400	7660	8100	8680	9400	9790	10190	10600	11030
9800	8010	8460	9050	9800	10200	10610	11040	
10200	8370	8820	9430	10200	10610	11030		
10600	8730	9180	9810	10600	11020			

Field Limit Weight (1000 LB)

WIND CORR'D FIELD LENGTH (FT)	AIRPORT PRESSURE ALTITUDE (FT)											
	0		2000		4000		6000		8000		10000	
	DRY	WET	DRY	WET	DRY	WET	DRY	WET	DRY	WET	DRY	WET
3800	93.3		87.8									
4200	107.1	88.3	100.8		94.7		88.9					
4600	121.0	100.2	114.0	94.3	107.1	88.6	100.6		94.3		88.3	
5000	132.2	112.3	125.9	105.6	119.8	99.3	112.5	93.2	105.5	87.4	98.8	
5400	143.5	123.7	136.5	117.2	130.0	110.1	123.7	103.5	116.8	97.0	109.4	90.8
5800	159.6	133.4	151.9	127.1	140.0	120.9	133.2	113.8	126.6	106.7	120.2	100.0
6200	171.1	143.2	162.9	136.3	154.9	129.7	142.7	123.5	135.6	116.6	128.8	109.2
6600	182.7	157.8	173.8	148.5	165.2	138.5	157.1	131.7	146.7	125.2	137.3	118.6
7000	191.9	167.9	184.8	159.8	175.6	151.8	166.9	140.0	158.5	133.0	150.4	126.4
7400		177.9	193.0	169.3	186.0	161.0	176.7	153.0	167.8	140.9	159.2	133.8
7800		187.5		178.8	193.3	170.0	186.5	161.6	177.1	153.5	168.0	141.1
8200		194.6		187.8		179.0	193.3	170.1	186.3	161.5	176.7	153.3
8600				194.5		187.5		178.6	190.7	169.6	183.1	160.9
9000						193.8		186.9	194.3	177.7	187.2	168.5
9400								192.9		185.7	191.3	176.1
9800										189.9		182.3
10200										193.1		185.9
10600												189.4
11000												192.9

Decrease field limit weight 13300 lb when using manual speedbrakes.

Copyright © The Boeing Company. See title page for details.

Landing Climb Limit Weight

Valid for approach with flaps 15 and landing with flaps 30 or 40
Based on engine bleed for packs on and anti-ice off

AIRPORT OAT (°C)	LANDING CLIMB LIMIT WEIGHT (1000 LB)						
	AIRPORT PRESSURE ALTITUDE (FT)						
	-2000	0	2000	4000	6000	8000	10000
54	150.1	140.6					
52	152.8	144.3					
50	155.5	148.6	136.4				
48	158.4	151.4	140.0				
46	161.4	154.2	143.5	132.1			
44	164.3	156.8	146.5	135.3			
42	167.0	159.5	149.2	138.6	127.1		
40	169.8	162.3	151.8	141.0	130.0		
38	172.6	165.1	154.5	143.5	132.9	121.0	
36	175.4	168.0	157.1	146.6	135.3	123.1	
34	178.0	170.9	160.1	149.5	137.7	125.2	115.0
32	178.2	174.0	162.8	151.9	139.8	127.6	117.4
30	178.4	176.9	165.2	153.7	141.9	129.8	119.6
28	178.6	177.1	167.2	155.5	143.9	131.8	121.5
26	178.8	177.3	169.3	157.0	145.3	133.8	123.4
24	178.9	177.4	169.4	158.3	146.6	135.5	124.8
22	179.1	177.6	169.5	159.4	147.8	136.5	125.9
20	179.2	177.7	169.6	159.5	148.9	137.4	127.0
18	179.4	177.8	169.7	159.6	149.9	138.2	127.8
16	179.5	178.0	169.8	159.7	150.0	139.0	128.6
14	179.7	178.1	169.9	159.7	150.1	139.8	129.3
12	179.8	178.2	170.0	159.8	150.1	139.8	130.1
10	180.0	178.4	170.1	159.9	150.2	139.9	130.8
-40	181.4	179.6	171.2	161.0	151.2	140.8	132.1

With engine bleed for packs off, increase weight by 2700 lb.
With engine anti-ice on, decrease weight by 500 lb.
With engine and wing anti-ice on, decrease weight by 3000 lb.
When operating in icing conditions during any part of the flight with forecast landing temperature below 10°C, decrease weight by 12100 lb.
Includes brake energy limits.

Copyright © The Boeing Company. See title page for details.

Quick Turnaround Limit Weight
Flaps 40

AIRPORT OAT (°C)	PRESSURE ALTITUDE (FT)					
	0	2000	4000	6000	8000	10000
54	176.6					
50	177.7	171.2				
45	179.2	172.6	166.1			
40	180.7	174.1	167.5	161.1		
35	182.3	175.6	168.9	162.5	156.2	
30	183.8	177.1	170.4	163.9	157.5	151.3
25	185.4	178.6	171.8	165.3	158.9	152.6
20	187.1	180.2	173.3	166.8	160.3	154.0
15	188.9	181.8	174.9	168.3	161.7	155.4
10	190.0	183.4	176.5	169.8	163.2	156.8
5	190.0	185.1	178.2	171.4	164.7	158.2
0	190.0	186.9	179.8	173.0	166.3	159.8
-5	190.0	188.8	181.6	174.7	167.9	161.3
-10	190.0	190.0	183.3	176.4	169.6	162.9
-15	190.0	190.0	185.2	178.2	171.3	164.5
-20	190.0	190.0	187.1	180.0	173.0	166.2
-30	190.0	190.0	190.0	183.8	176.7	169.7
-40	190.0	190.0	190.0	187.9	180.6	173.5
-50	190.0	190.0	190.0	190.0	184.7	177.4
-54	190.0	190.0	190.0	190.0	186.4	179.1

Increase weight by 1500 lb per 1% uphill slope. Decrease weight by 3100 lb per 1% downhill slope.
Increase weight by 4000 lb per 10 knots headwind. Decrease weight by 16600 lb per 10 knots tailwind.

After landing at weights exceeding those shown above, adjusted for slope and wind, wait at least 67 minutes and check that wheel thermal plugs have not melted before executing a takeoff.

As an alternate procedure, ensure that each brake pressure plate temperature, without artificial cooling, is less than 218°C as follows: No sooner than 10 and no later than 15 minutes after parking, measure each brake pressure plate surface temperature at a minimum of two points per brake by an accurate method (using a Doric Microtemp 450 hand held thermometer or equivalent, hold temperature probe in place for 20 seconds or until reading stabilizes). If each measured temperature is less than 218°C, immediate dispatch is allowed; otherwise the required minimum ground wait period of 67 minutes applies.

Copyright © The Boeing Company. See title page for details.

Intentionally
Blank

Copyright © The Boeing Company. See title page for details.

Introduction

This chapter contains self dispatch performance data intended primarily for use by flight crews in the event that information cannot be obtained from the airline dispatch office. The takeoff data provided is for a single takeoff flap at max takeoff thrust. The range of conditions covered is limited to those normally encountered in airline operation. In the event of conflict between the data presented in this chapter and that contained in the approved Airplane Flight Manual, the Flight Manual shall always take precedence.

Takeoff

The maximum allowable takeoff weight will be the least of the Field, Climb, Obstacle, Brake Energy and Tire Speed Limit Weights as determined from the tables shown.

Field Limit Weight - Slope and Wind Corrections

These tables for dry and wet runways provide corrections to the field length available for the effects of runway slope and wind component along the runway. Enter the appropriate table with the available field length and runway slope to determine the slope corrected field length. Next enter the appropriate table with slope corrected field length and wind component to determine the slope and wind corrected field length.

Field and Climb Limit Weight

Tables are presented for selected airport pressure altitudes and runway conditions and show both Field and Climb Limit Weights. Enter the appropriate table for pressure altitude and runway condition with “Slope and Wind Corrected Field Length” determined above and airport OAT to obtain Field Limit Weight. Also read Climb Limit Weight for the same OAT. Intermediate altitudes may be interpolated or use next higher altitude. When finding a maximum weight for a wet runway, the dry runway limit weight must also be determined and the lower of the two weights used.

Obstacle Limit Weight

The Reference Obstacle Limit Weight table provides obstacle limit weights for reference airport conditions based on obstacle height above the runway surface and distance from brake release. Enter the adjustment

Copyright © The Boeing Company. See title page for details.

tables to adjust the reference Obstacle Limit Weight for the effects of OAT, pressure altitude and wind as indicated. In the case of multiple obstacles, enter the tables successively with each obstacle and determine the most limiting weight.

Tire Speed Limit

Maximum tire speed limited weights are presented for 225 MPH tires. To determine the tire speed limit weight, enter the table with OAT and airport pressure altitude. Adjust the tire speed limit weight according to the notes below the table to account for wind.

Enroute

Long Range Cruise Maximum Operating Altitude

These tables provide the maximum operating altitude in the same manner as the FMC. Maximum altitudes are shown for a given cruise weight and maneuver capability. Note that this table considers both thrust and buffet limits, providing the more limiting of the two. Any data that is thrust limited is denoted by an asterisk and represents only a thrust limited condition in level flight with 100 ft/min residual rate of climb. Flying above these altitudes with sustained banks in excess of approximately 15° may cause the airplane to lose speed and/or altitude. The altitudes shown in the table are limited to the maximum certified altitude of 41000 ft.

Long Range Cruise Trip Fuel and Time

Long Range Cruise Trip Fuel and Time tables are provided to determine trip time and fuel required to destination.

To determine trip fuel and time for a constant altitude cruise, first enter the Ground to Air Miles Conversion table to convert ground distance and enroute wind to an equivalent still air distance for use with the Reference Fuel and Time tables. Next, enter the Reference Fuel and Time table with air distance from the Ground to Air Miles Conversion table and the desired altitude and read Reference Fuel and Time Required. Lastly, enter the Fuel Required Adjustment table with the Reference Fuel and the planned landing weight to obtain the adjustment to the fuel required at the planned landing weight.

Long Range Cruise Step Climb Trip Fuel and Time

The Long Range Cruise Step Climb Trip Fuel and Time tables are provided to determine trip time and fuel required to destination when flying a step climb profile. Step climb profiles are based on 4000 ft step climbs to keep the flight within 2000 ft of the optimum altitude for the current cruise

Copyright © The Boeing Company. See title page for details.

weight. To determine trip fuel and time, enter the Ground to Air Miles Conversion table and determine air distance as discussed above. Then enter the Trip Fuel and Time Required table with air distance and planned landing weight to read trip fuel. Continue across the table to read trip time.

Short Trip Fuel and Time

These tables are provided to determine trip fuel and time for short distances or alternates. Obtain air distance from the table using the ground distance and wind component to the alternate. Enter the Trip Fuel and Time Required table with air distance and read trip fuel required for the expected landing weight, together with time to alternate at right. For distances greater than shown or other altitudes, use the Long Range Cruise Trip Fuel and Time tables.

Holding Planning

This table provides total fuel flow information necessary for planning flaps up holding and reserve fuel requirements. Data is based on the FMC holding speed schedule which is the higher of the maximum endurance and flaps up maneuver speeds. As noted, the fuel flow is based on flight in a racetrack holding pattern. For holding in straight and level flight, reduce table values by 5%.

Crew Oxygen Requirements

Tables are provided to determine the minimum dispatch oxygen pressure for protective breathing equipment used by the flight crew. Enter the number of crew plus observers using oxygen and read the minimum cylinder pressure required for the appropriate bottle temperature and size. These pressures provide sufficient oxygen for 15 minutes of protective breathing for each flight crew member plus 10% contingency at 8000 ft cabin pressure altitude. Route specific analysis is necessary to determine if additional oxygen pressure is needed to meet supplemental oxygen requirements.

Net Level Off Weight

The Net Level Off Weight table is provided to determine terrain clearance capability in straight and level flight following an engine failure. Regulations require terrain clearance planning based on net performance which is the gross (or actual) gradient performance degraded by 1.1%. In addition, the net level off pressure altitude must clear the terrain by 1000 ft.

Copyright © The Boeing Company. See title page for details.

To determine the maximum weight for terrain clearance, enter the table with required net level off pressure altitude and expected ISA deviation to obtain weight. Adjust weight for anti-ice operation as noted below the table.

Extended Range Operations

Regulations require that flights conducted over a route that contains a point further than one hour's time at "normal one engine inoperative speed" from an adequate diversion airport comply with rules set up specifically for "Extended Range Operation with Two Engine airplanes." This section provides reserve fuel planning information for the "Critical Fuel Scenario" based on two engine operation at Long Range Cruise as well as single engine operation at Long Range Cruise.

Long Range Cruise Critical Fuel Reserves

Enter the Ground to Air Miles Conversion table with forecast wind and ground distance to diversion airport from critical point to obtain air distance. Now enter the Critical Fuel table with air distance and expected weight at the critical point and read required fuel. Apply the noted fuel adjustments as necessary. Regulations require a 5% allowance for performance deterioration unless a value has been established by the operator for inservice deterioration.

As noted below each table, the fuel required is the greater of the two engine fuel and the single engine fuel. This fuel is compared to the amount of fuel normally onboard the airplane at that point in the route. If the fuel required by the critical fuel reserves exceeds the amount of fuel normally expected, the fuel load must be adjusted accordingly.

Landing

Tables are provided for determining the maximum landing weight as limited by field length or climb requirements for a single landing flap.

Maximum landing weight is the lowest of the field length limit weight, climb limit weight, or maximum certified landing weight.

Landing Field Limit Weight

Obtain wind corrected field length by entering the Wind Corrected Field Length table with field length available and wind component along the runway. Now enter the Field Limit Weight table with wind corrected field length and pressure altitude to read field limit weight for the expected runway condition.

Copyright © The Boeing Company. See title page for details.

Landing Climb Limit Weight

Enter the table with airport OAT and pressure altitude to read landing climb limit weight. Apply the noted adjustments as required.

Quick Turnaround Limit Weight

Enter the table with airport pressure altitude and OAT to read maximum quick turnaround weight. Apply the noted adjustments as required.

If the landing weight exceeds the maximum quick turnaround weight, wait the specified time and then check that the wheel thermal plugs have not melted before executing a subsequent takeoff, or ensure the brake temperature is within limits using the alternate procedure described on the page.

Copyright © The Boeing Company. See title page for details.

Intentionally
Blank

Copyright © The Boeing Company. See title page for details.

DO NOT USE FOR FLIGHT

Dimensions 1.10.1

Principal Dimensions 1.10.1

Instrument Panels 1.20.1

Panel Arrangement 1.20.1
Aft Flight Deck Overview 1.20.2
Left Forward Panel 1.20.3
Right Forward Panel 1.20.4
Glareshield Panel 1.20.5
Center Forward Panel 1.20.7
Forward Aisle Stand 1.20.10
737-600/700 Forward Overhead Panel 1.20.11
737-800/900 Forward Overhead Panel 1.20.12
Aft Overhead Panel. 1.20.13
Control Stand 1.20.14
Aft Electronic Panel 1.20.15
Auxiliary Panels 1.20.17
Attendant Panels 1.20.18
Attendant Handset. 1.20.19

Controls and Indicators 1.30.1

Flight Deck Lighting. 1.30.1
Map and Chart Light Controls. 1.30.1
Main Panel Lighting 1.30.1
Background and AFDS Flood Light Control 1.30.2
Flood and Aft Electronics Lights Controls 1.30.2
Overhead/Circuit Breaker Panel Light Controls 1.30.3
Dome Light Control. 1.30.3
Master Lights Test and Dim Switch 1.30.4

Copyright © The Boeing Company. See title page for details.

DO NOT USE FOR FLIGHT

Exterior Lighting 1.30.5
Landing, Runway Turnoff and Taxi Lights 1.30.5
Miscellaneous Exterior Lights 1.30.6
Emergency Lighting and Passenger Signs 1.30.7
Doors 1.30.8
Cabin Door 1.30.8
Flight Deck Security Door 1.30.9
Exterior Door Annunciator Lights 1.30.12
Passenger Entry/Galley Service Doors 1.30.16
Oxygen 1.30.16
Oxygen Panel 1.30.16
Oxygen Mask Panel 1.30.17
Oxygen Mask and Regulator 1.30.18
Forward Airstairs. 1.30.19
Interior and Exterior Controls 1.30.19
Water System Controls 1.30.21
Lavatory Controls 1.30.22

Systems Description 1.40.1
Introduction 1.40.1
Lighting Systems. 1.40.1
Exterior Lighting 1.40.1
Exterior Lighting Locations 1.40.3
Flight Deck Lighting 1.40.4
Passenger Cabin Lighting 1.40.4
Passenger Cabin Signs 1.40.5
Emergency Lighting. 1.40.5
Emergency Exit Lighting 1.40.9
Oxygen Systems 1.40.10
Oxygen System Schematic. 1.40.11
Flight Crew Oxygen System 1.40.12
Portable Protective Breathing Equipment 1.40.13
Passenger Oxygen System 1.40.13

Copyright © The Boeing Company. See title page for details.

PSU Oxygen Mask Compartment 1.40.14
Passenger Portable Oxygen 1.40.15
Passenger Portable Oxygen Schematic 1.40.15
Fire Extinguishers 1.40.16
Water Fire Extinguishers 1.40.16
Halon (BCF) Fire Extinguishers 1.40.16
Fire Extinguisher Usage 1.40.18
Emergency Equipment Symbols 1.40.19
Emergency Equipment Locations 1.40.20
Doors and Windows 1.40.22
Cabin Door 1.40.22
Flight Deck Security Door 1.40.23
Flight Deck Number Two Windows 1.40.24
Lower Cargo Compartments 1.40.25
Emergency Escape 1.40.25
Emergency Evacuation Routes 1.40.26
Flight Deck Window Emergency Egress 1.40.27
Escape Slide Detachment Handle 1.40.29
Escape Straps 1.40.30
Emergency Exit Doors 1.40.33
Pilot Seat Adjustment 1.40.36
Pilot Seat Adjustment 1.40.36
Galleys 1.40.36
Electrical Power 1.40.37
Water Service 1.40.37
Water System 1.40.37
Quantity Indication and System Operation 1.40.38
Hot Water 1.40.38
Servicing 1.40.38
Forward Airstair 1.40.38
Interior Control 1.40.39
Exterior Control 1.40.39
Airstairs 1.40.40

Copyright © The Boeing Company. See title page for details.

Intentionally
Blank

Copyright © The Boeing Company. See title page for details.

Principal Dimensions

[Option: 737-600]

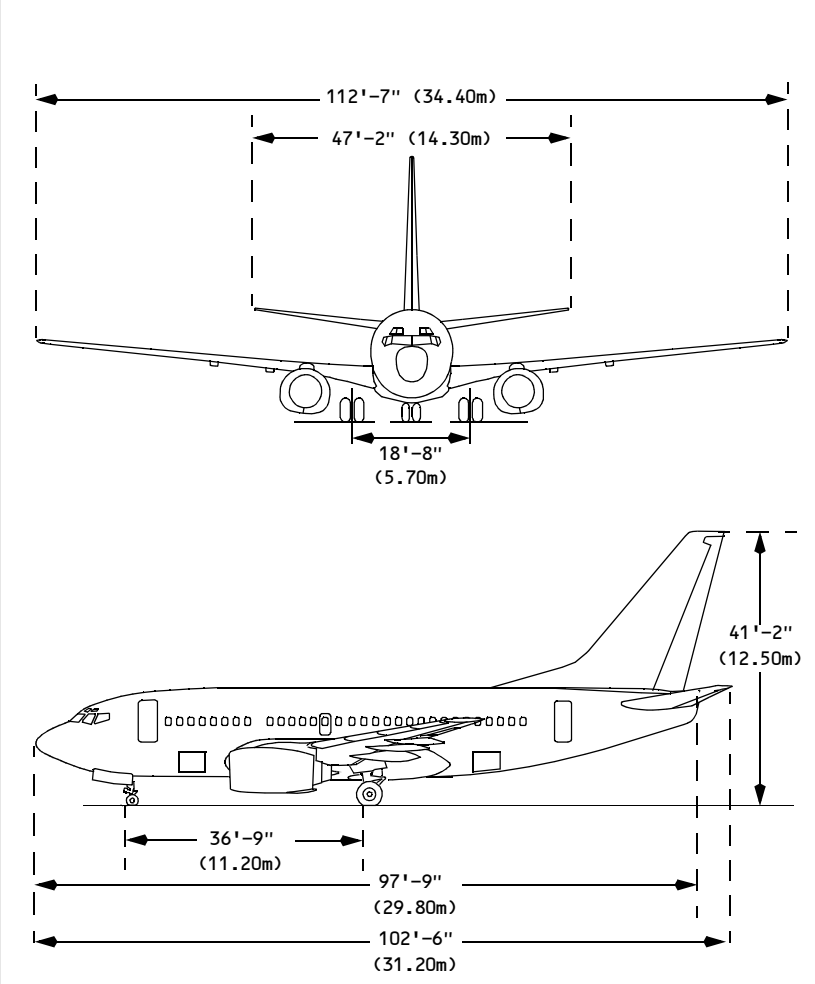

Copyright © The Boeing Company. See title page for details.

[Option: 737-700]

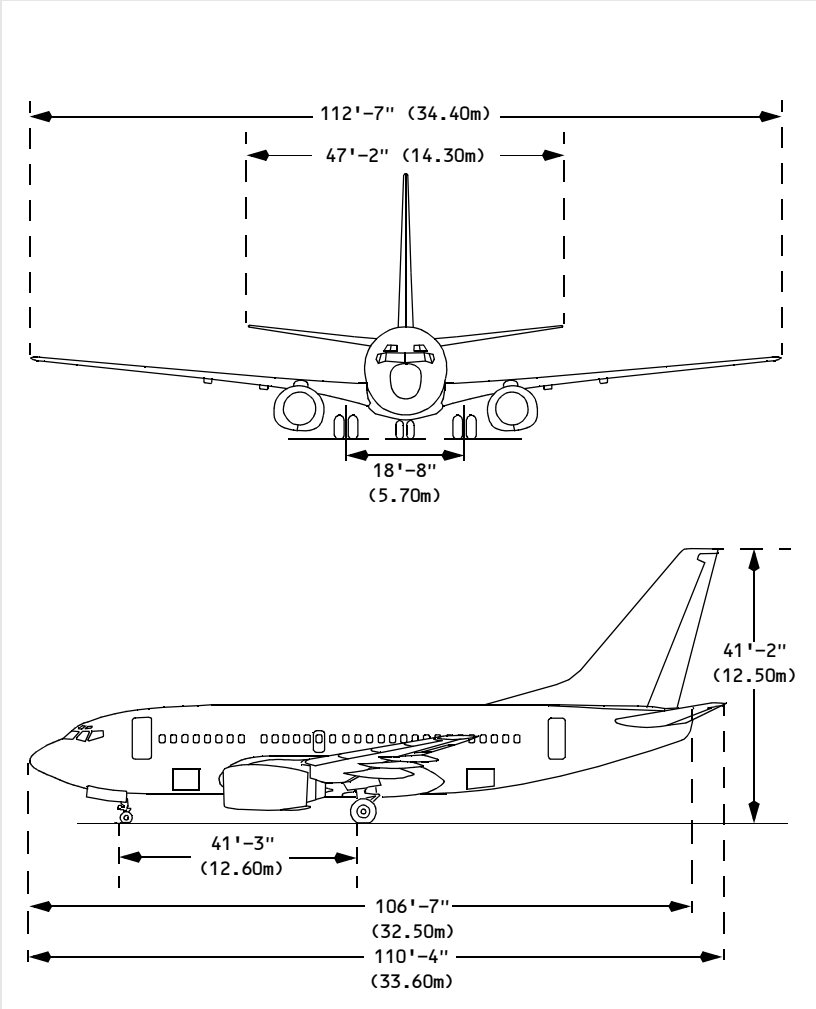

Copyright © The Boeing Company. See title page for details.

[Option: 737-800 with Blended Winglets]

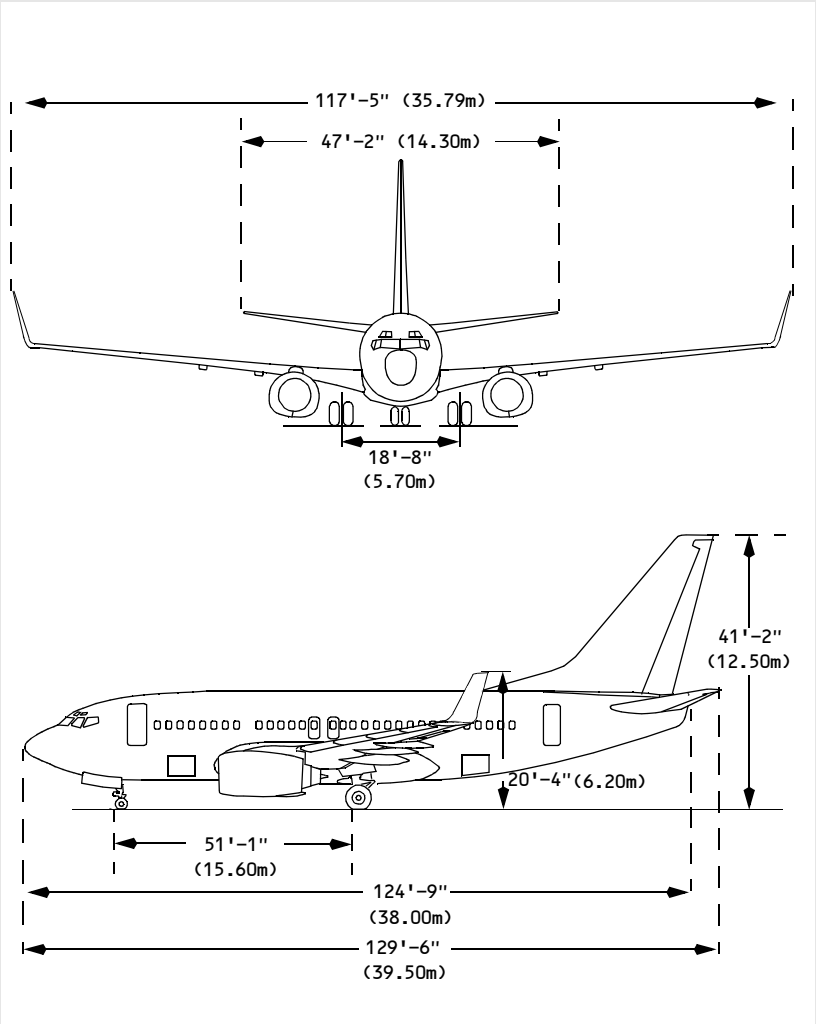

Copyright © The Boeing Company. See title page for details.

[Option: 737-900]

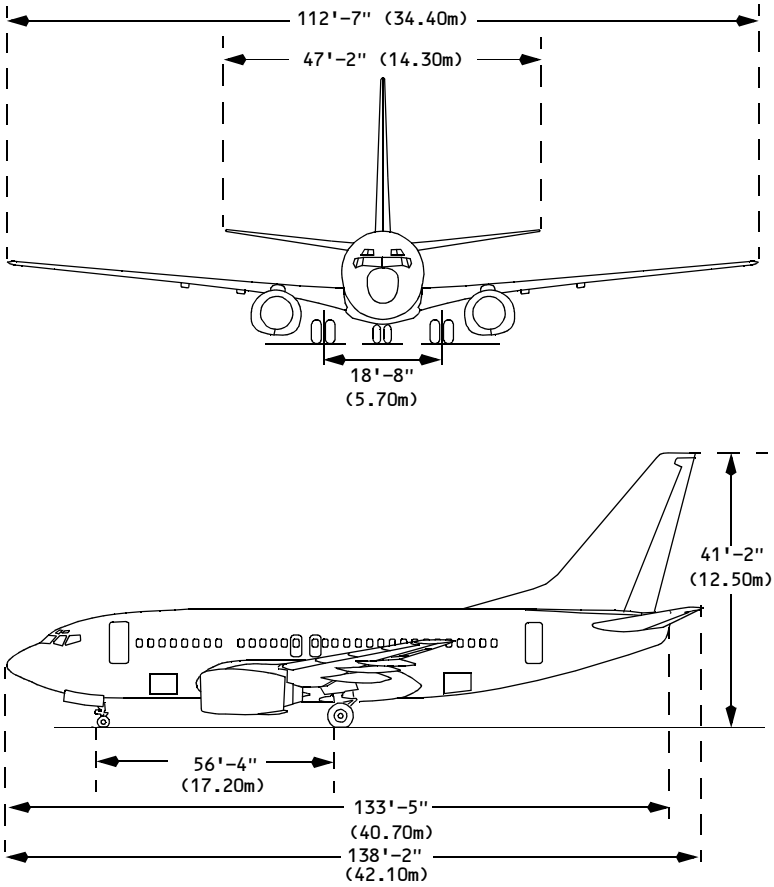

Copyright © The Boeing Company. See title page for details.

DO NOT USE FOR FLIGHT

Panel Arrangement

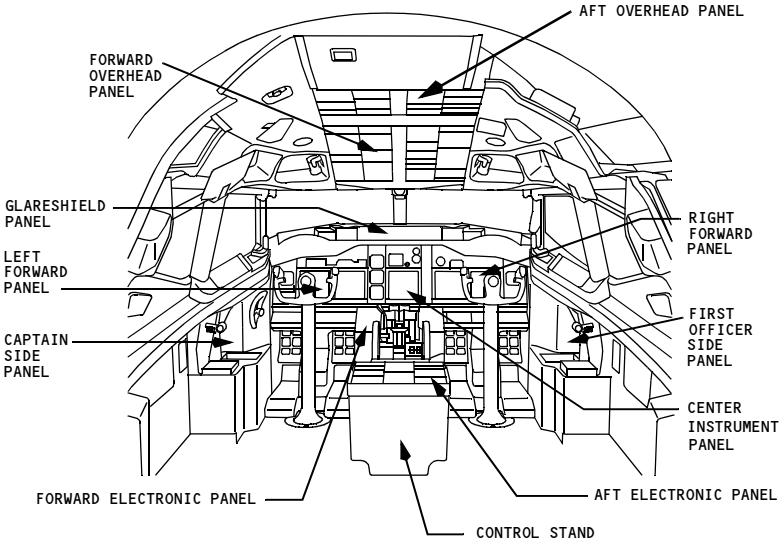

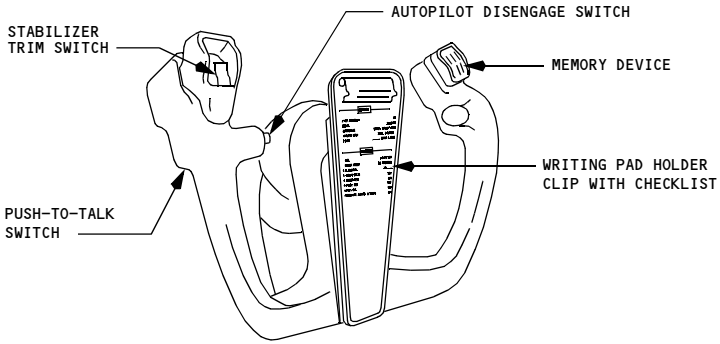

CAPTAIN CONTROL WHEEL DETAIL

Copyright © The Boeing Company. See title page for details.

Aft Flight Deck Overview

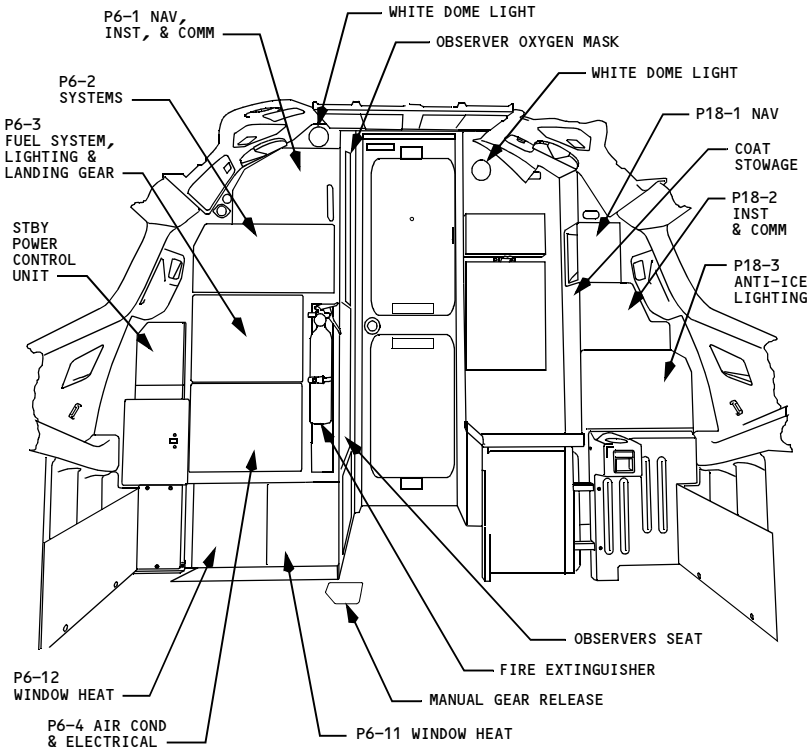

AFT FLIGHT DECK OVERVIEW

Copyright © The Boeing Company. See title page for details.

Left Forward Panel

[Option - Typical]

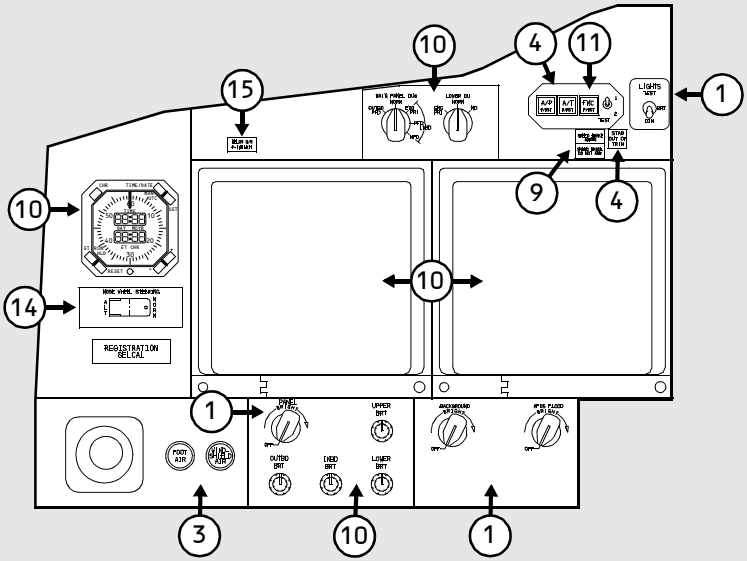

Right Forward Panel

[Option - Typical]

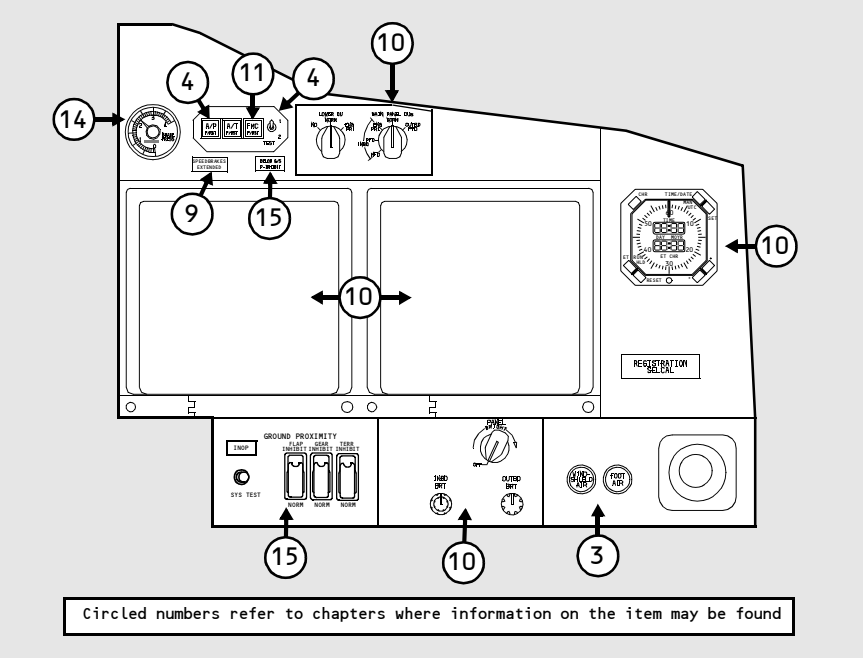

Circled numbers refer to chapters where information on the item may be found

Copyright © The Boeing Company. See title page for details.

Glareshield Panel

[Option - Typical mode control panel]

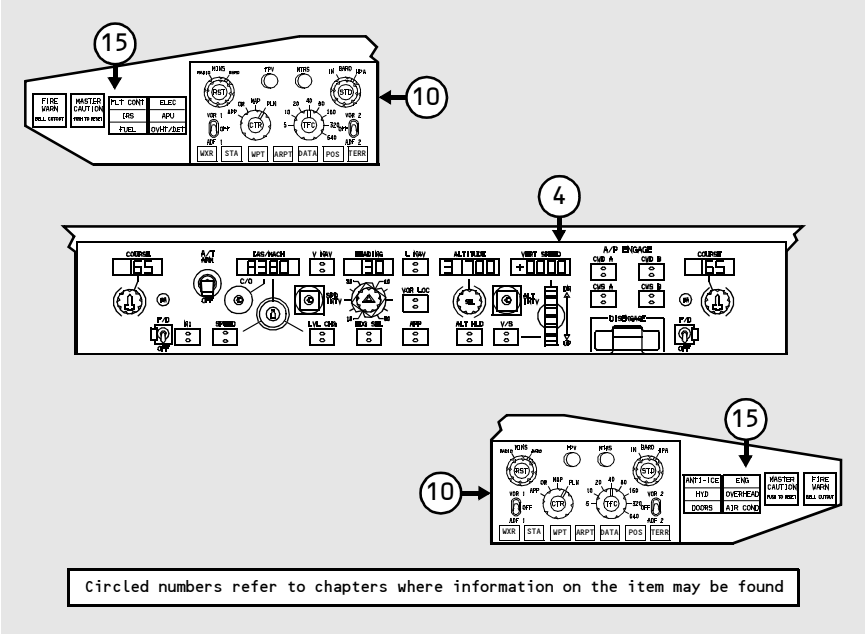

Copyright © The Boeing Company. See title page for details.

DO NOT USE FOR FLIGHT

Intentionally
Blank

Copyright © The Boeing Company. See title page for details.

Center Forward Panel

[Option - Typical 737-600 with EFIS/MAP displays]

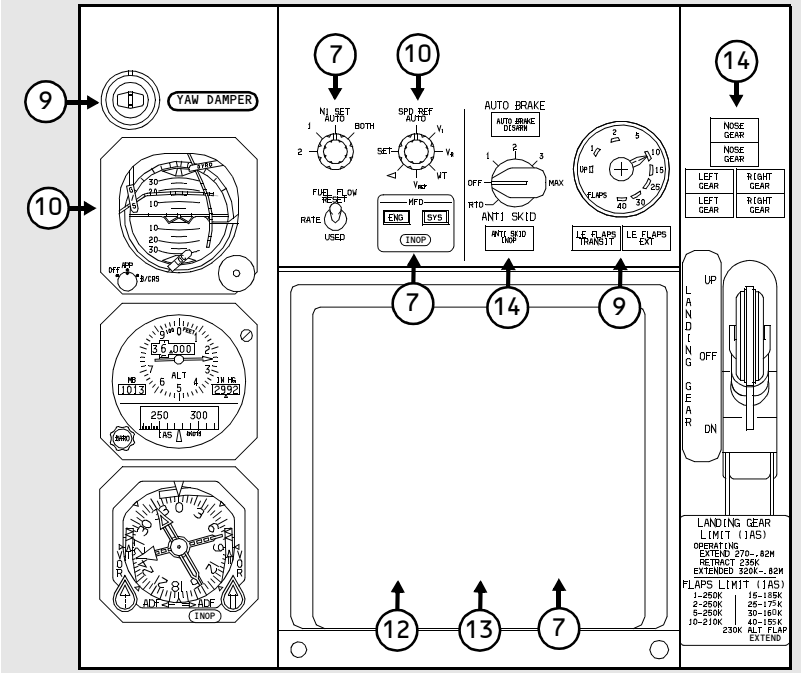

Copyright © The Boeing Company. See title page for details.

[Option - Typical 737-700 with EFIS/MAP displays]

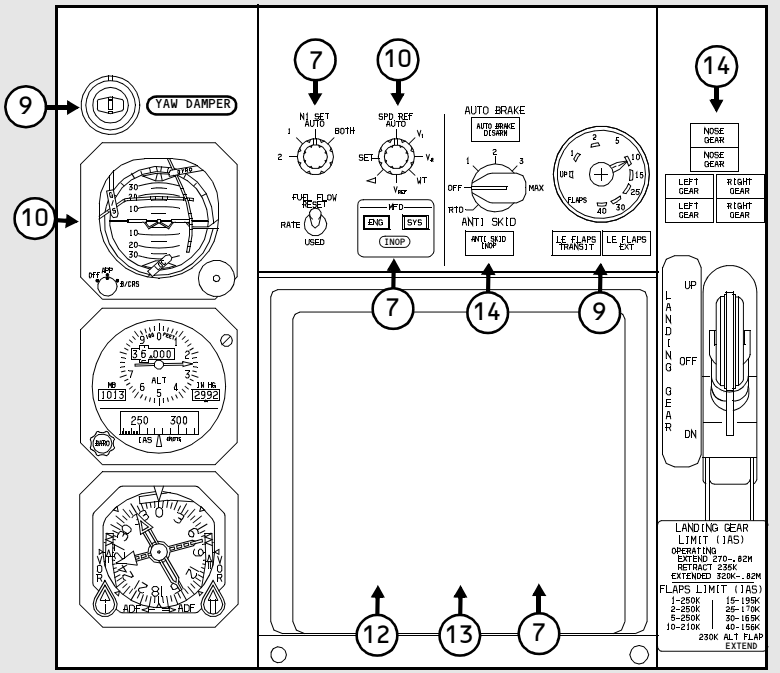

Copyright © The Boeing Company. See title page for details.

[Option - Typical 737-800/900 with PFD/ND displays]

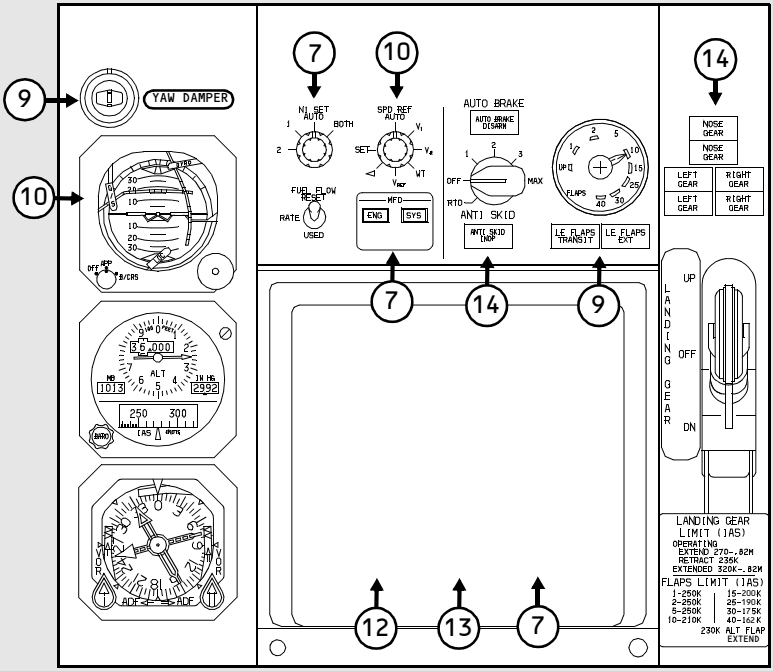

Copyright © The Boeing Company. See title page for details.

Forward Aisle Stand

[Option - Typical Liquid Crystal Display MCDU]

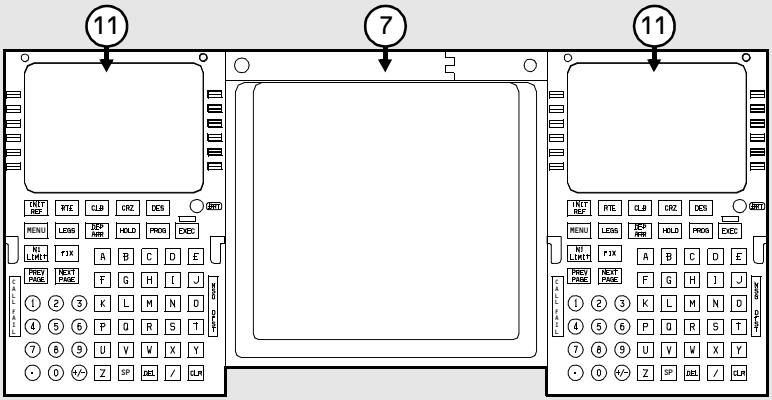

Copyright © The Boeing Company. See title page for details.

737-600/700 Forward Overhead Panel

[Option - Typical 737-600/700 Forward Overhead Panel]

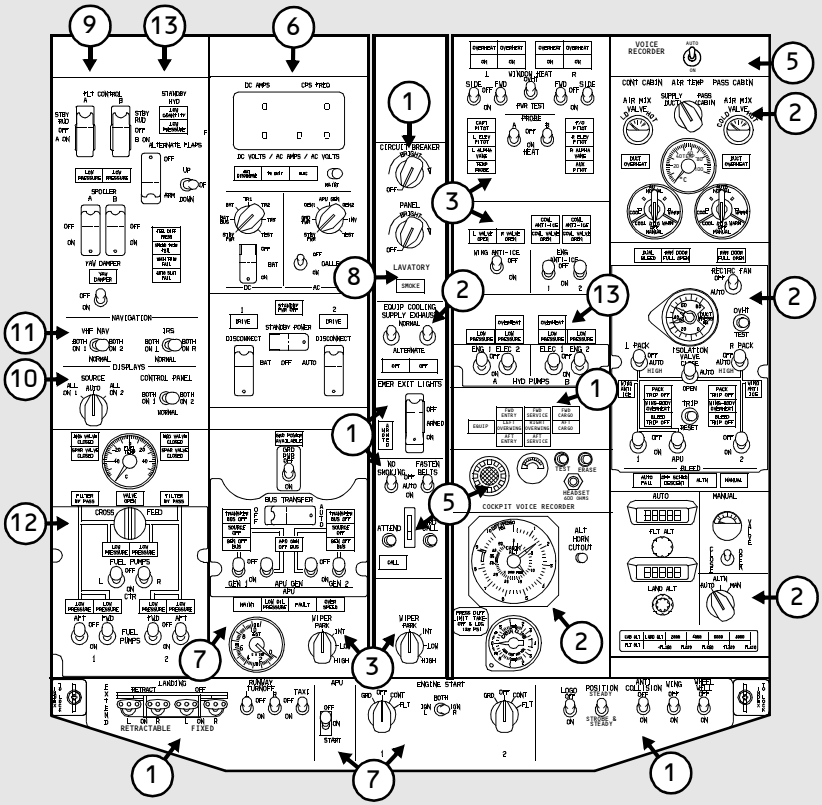

Copyright © The Boeing Company. See title page for details.

DO NOT USE FOR FLIGHT

737-800/900 Forward Overhead Panel

[Option - Typical 737-800/900 Forward Overhead Panel]

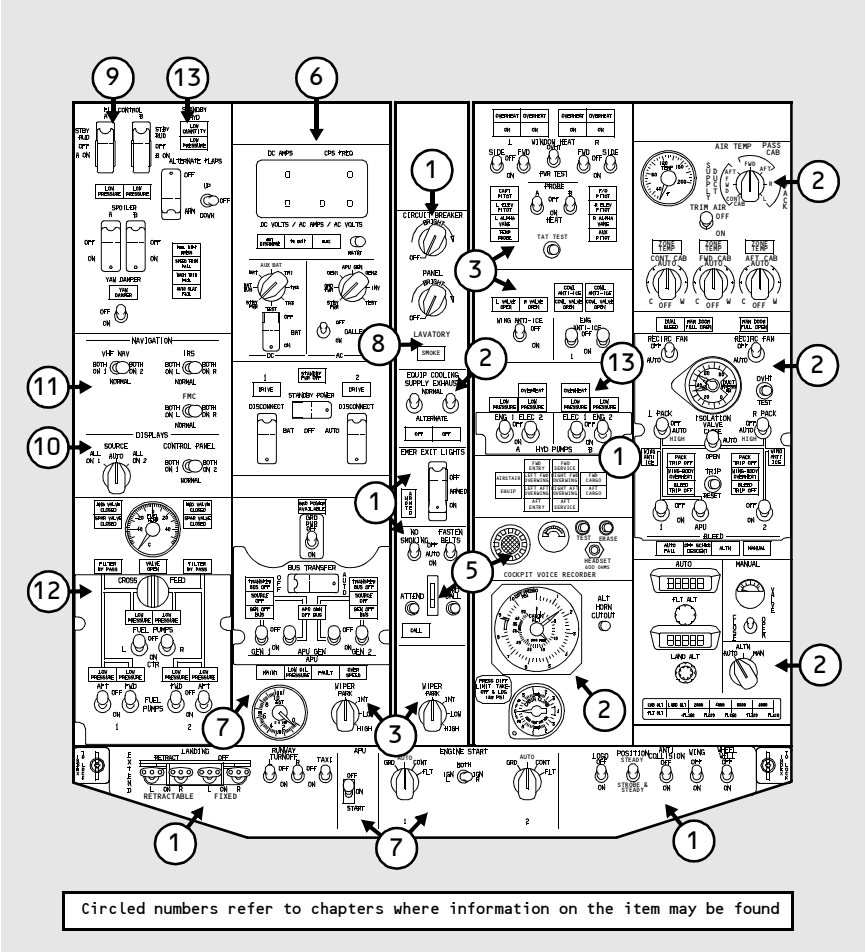

Copyright © The Boeing Company. See title page for details.

Aft Overhead Panel

[Option - Typical Aft Overhead Panel]

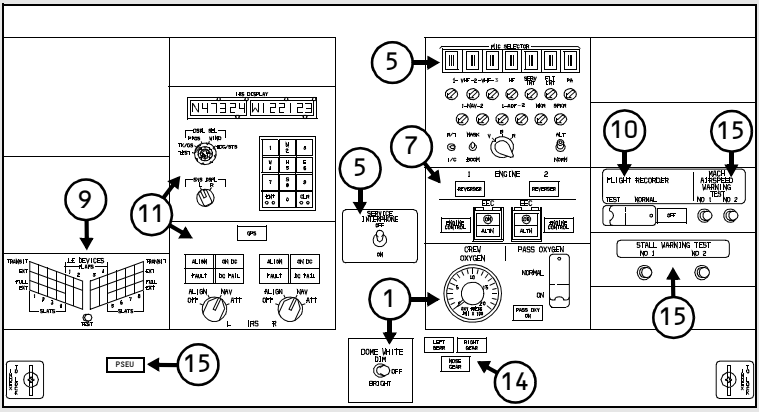

Circled numbers refer to chapters where information on the item may be found

Copyright © The Boeing Company. See title page for details.

DO NOT USE FOR FLIGHT

Control Stand

[Option - Typical Control Stand]

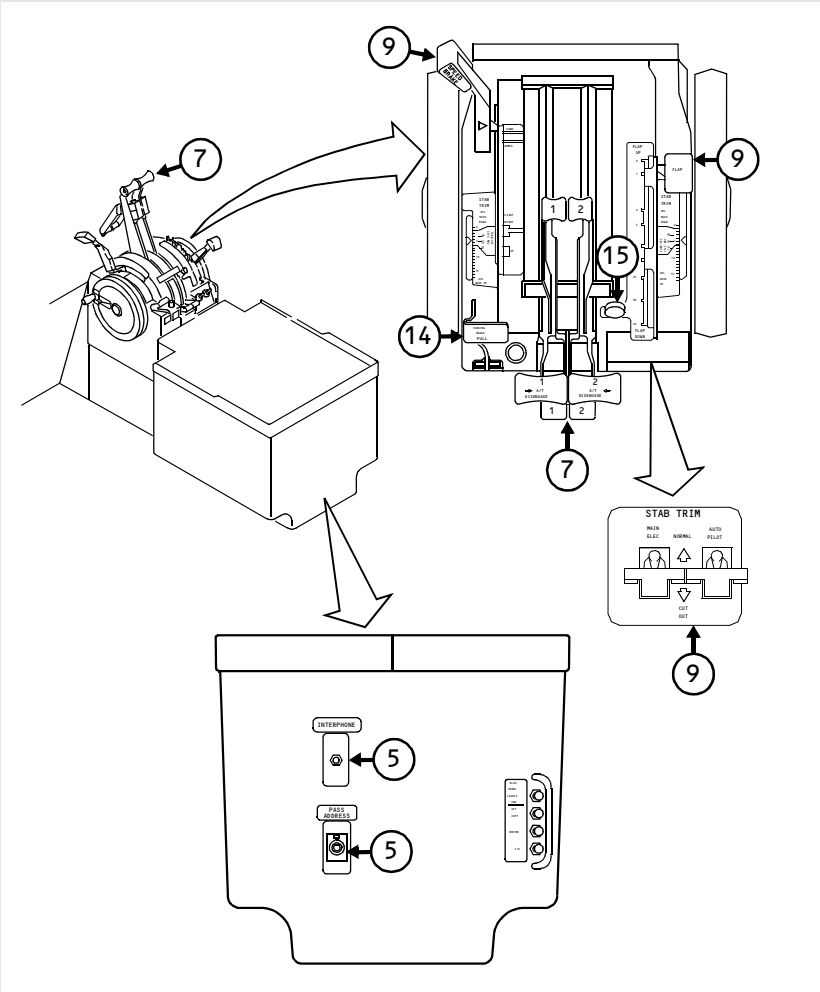

Circled numbers refer to chapters where information on the item may be found

Copyright © The Boeing Company. See title page for details.

Aft Electronic Panel

[Option - Typical Aft Electronic Panel]

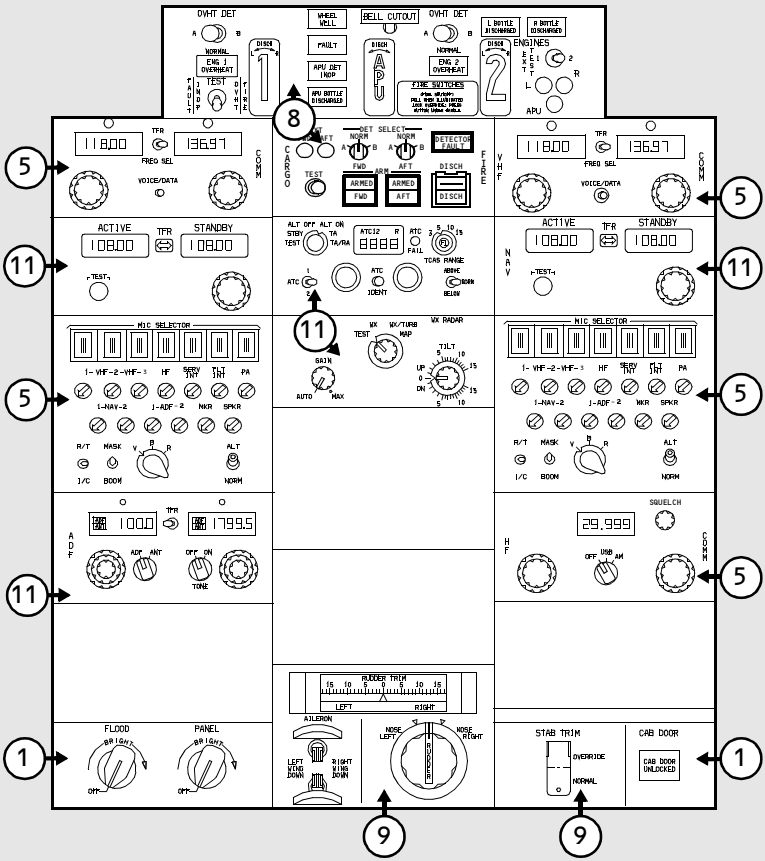

Circled numbers refer to chapters where information on the item may be found

Copyright © The Boeing Company. See title page for details.

DO NOT USE FOR FLIGHT

Intentionally
Blank

Copyright © The Boeing Company. See title page for details.

Auxiliary Panels

[Option - Typical]

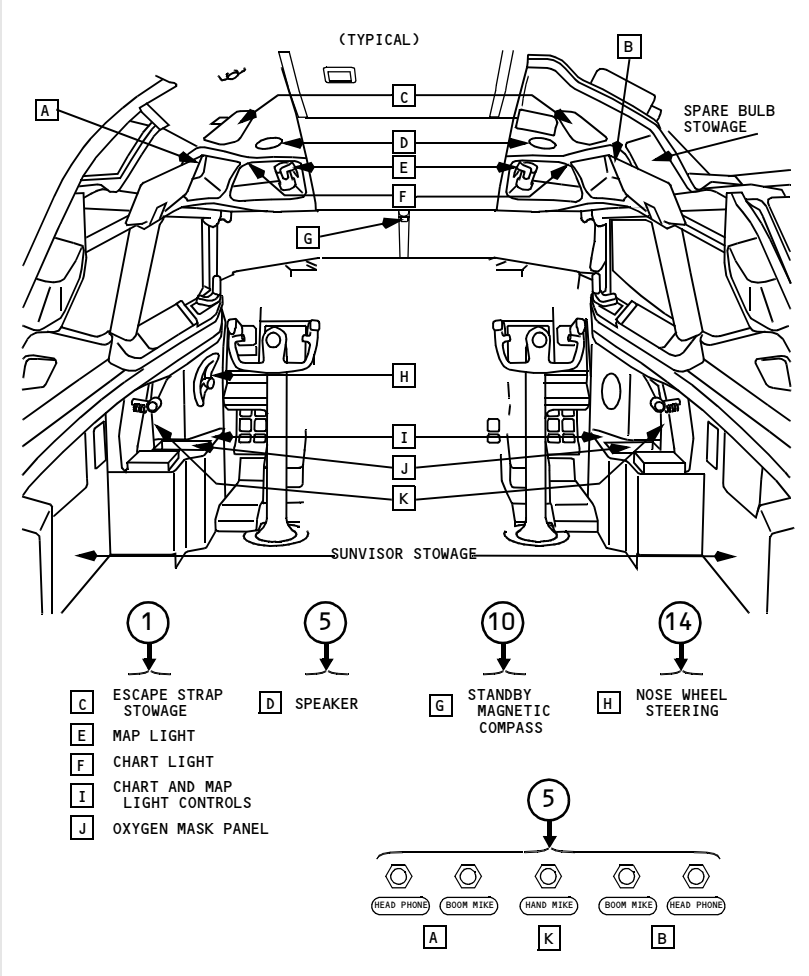

Circled numbers refer to chapters where information on the item may be found

Copyright © The Boeing Company. See title page for details.

Attendant Panels

Forward Attendant Panel

[Option - Typical]

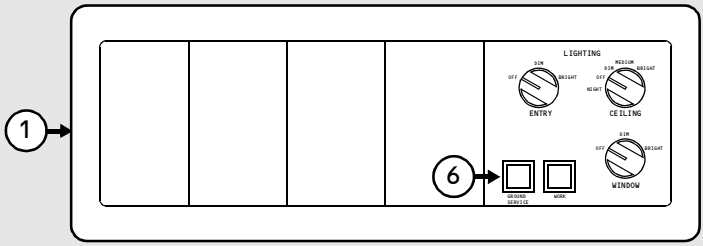

Circled numbers refer to chapters where information on the item may be found

Aft Attendant Panel

[Option - Typical]

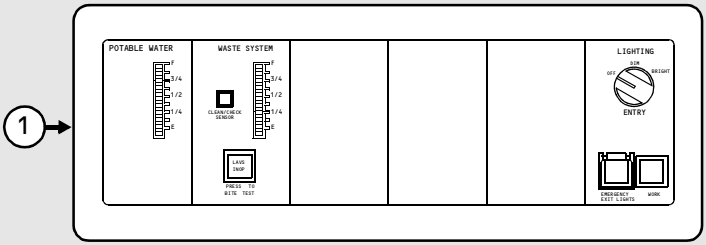

Circled numbers refer to chapters where information on the item may be found

Copyright © The Boeing Company. See title page for details.

Attendant Handset

[Option - Typical]

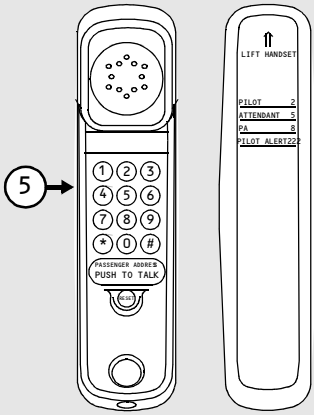

Circled numbers refer to chapters where information on the item may be found

Copyright © The Boeing Company. See title page for details.

DO NOT USE FOR FLIGHT

Intentionally
Blank

Copyright © The Boeing Company. See title page for details.

Flight Deck Lighting

Map and Chart Light Controls

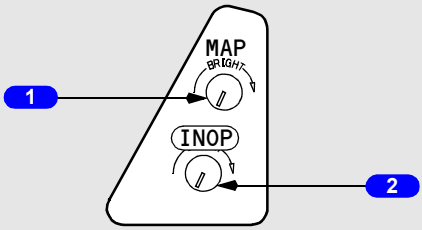

SIDEWALL PANELS

1 MAP Light Control

Rotate – adjusts brightness of Captain/First Officer map lights

2 CHART Light Control

Rotate – adjusts brightness of Captain/First Officer chart lights

Main Panel Lighting

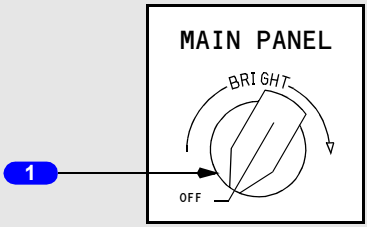

LEFT/RIGHT FORWARD PANELS

1 MAIN PANEL Light Control

Rotate –

- Captain – controls brightness of Captain's panel and instrument lighting, center instrument panel, and AFDS panel displays and edge lighting
- First Officer – controls brightness of First Officer's panel and instrument lighting.

Copyright © The Boeing Company. See title page for details.

Background and AFDS Flood Light Control

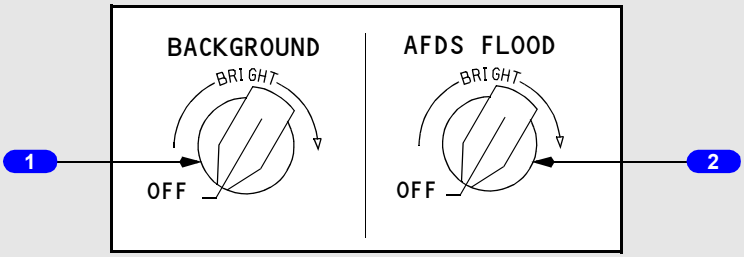

LEFT FORWARD PANEL

1 BACKGROUND Light Control

Rotate – controls incandescent lighting brightness for Captain's panel, First Officer's panel, and center panel.

2 AFDS FLOOD Light Control

Rotate – controls brightness of lighting directed at AFDS panel.

Flood and Aft Electronics Lights Controls

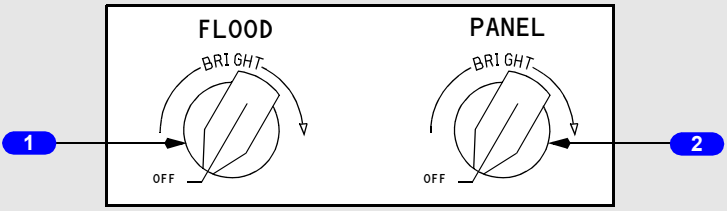

AISLE STAND

1 FLOOD Light Control

Rotate – controls overhead spotlight brightness directed at thrust lever quadrant.

2 PANEL Light Control

Rotate – controls forward and aft electronic control panel lights brightness.

Copyright © The Boeing Company. See title page for details.

Overhead/Circuit Breaker Panel Light Controls

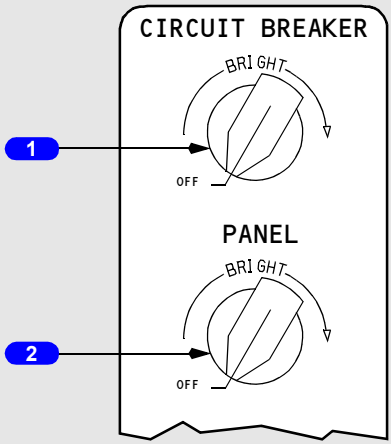

FORWARD OVERHEAD PANEL

1 CIRCUIT BREAKER Light Control

Rotate – controls P–6 and P–18 circuit breaker panels light brightness.

2 PANEL Light Control

Rotate – controls forward and aft overhead panel lights brightness.

Dome Light Control

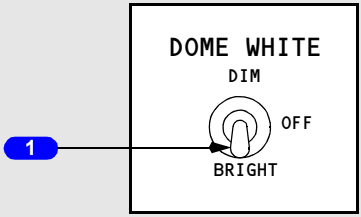

AFT OVERHEAD PANEL

1 DOME Light Control

DIM – sets overhead dome lights to low brightness.

OFF – overhead dome lights are extinguished.

BRIGHT – sets overhead dome lights to full brightness.

Copyright © The Boeing Company. See title page for details.

Master Lights Test and Dim Switch

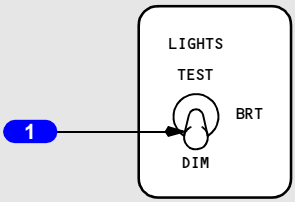

LEFT FORWARD PANEL

1 Master LIGHTS TEST and DIM SWITCH

TEST – illuminates all system lights on forward and aft overhead panels, and some lights on Captain and First Officer instrument panels to full brightness.

BRT (bright) – sets all system lights on forward and aft overhead panels, and some lights on Captain and First Officer panels to full brightness.

DIM – sets all system lights on forward and aft overhead panels, and some lights on Captain and First Officer panels to low brightness.

Copyright © The Boeing Company. See title page for details.

Exterior Lighting

Landing, Runway Turnoff and Taxi Lights

[Option - Typical]

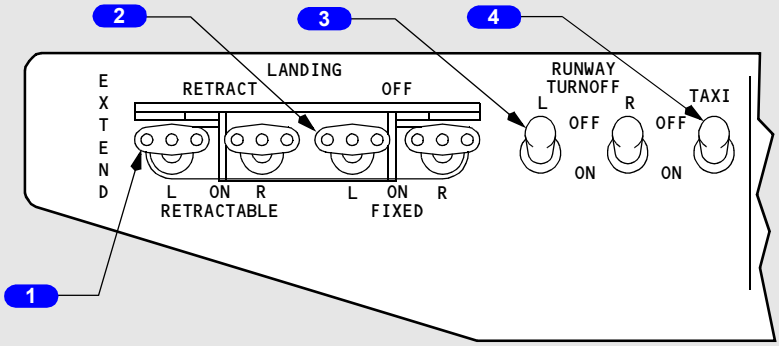

FORWARD OVERHEAD PANEL

1 RETRACTABLE LANDING Light Switch

RETRACT – retractable landing lights are retracted and extinguished

EXTEND – retractable landing lights are extended and extinguished

ON – retractable landing lights are extended and illuminated.

2 FIXED LANDING Light Switch

OFF – fixed landing lights are extinguished.

ON – fixed landing lights are illuminated.

3 RUNWAY TURNOFF Light Switch

OFF – runway turnoff lights located in leading edge of wing root are extinguished.

ON – runway turnoff lights are illuminated.

4 TAXI Light Switch

OFF – nose wheel well taxi light extinguished.

ON – nose wheel well taxi light illuminated.

Copyright © The Boeing Company. See title page for details.

Miscellaneous Exterior Lights

[Option - Typical]

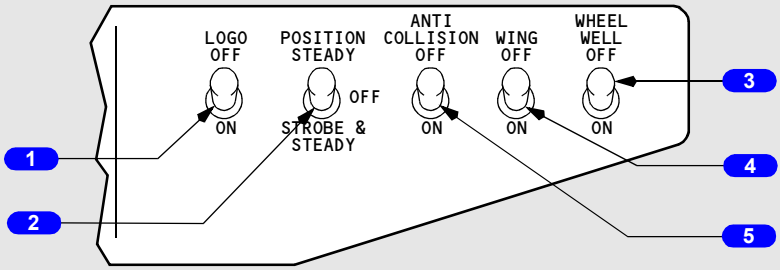

FORWARD OVERHEAD PANEL

1 LOGO Light Switch

OFF – logo lights on each side of vertical fin extinguished.

ON – logo lights illuminated.

2 POSITION Light Switch

STROBE & STEADY – red and green wing–tip position lights, white trailing edge wing–tip lights and wing–tip and tail strobe lights illuminated.

OFF – red and green wing–tip position lights, white trailing edge wing–tip lights and wing–tip and tail strobe lights extinguished.

STEADY – red and green wing–tip position lights and white trailing edge wing–tip lights illuminated.

3 WHEEL WELL Light Switch

OFF – three wheel well lights extinguished.

ON – wheel well lights illuminated.

4 WING Illumination Switch

OFF – wing leading edge lights on fuselage forward of wing extinguished.

ON – wing leading edge lights illuminated.

5 ANTI–COLLISION Light Switch

OFF – red rotating beacon lights on upper and lower fuselage extinguished.

ON – red rotating beacon lights illuminated.

Copyright © The Boeing Company. See title page for details.

Emergency Lighting and Passenger Signs

Flight Deck

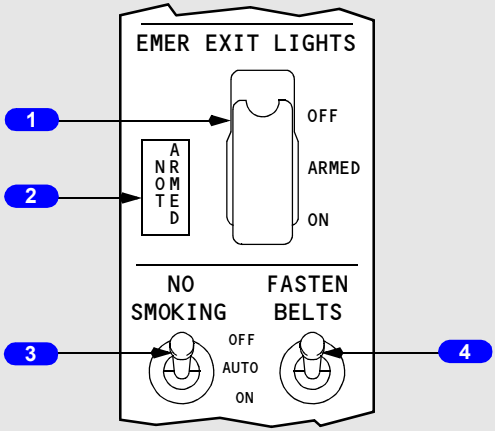

FORWARD OVERHEAD PANEL

1 Emergency (EMER) EXIT LIGHTS Switch

OFF – prevents emergency lights system operation if airplane electrical power fails or is turned off.

ARMED – (guarded position) all emergency lights illuminate automatically if airplane electrical power to DC bus No. 1 fails or AC power is turned off.

ON – all emergency lights illuminate.

2 Emergency (EMER) EXIT LIGHTS NOT ARMED Light

Illuminated (amber) – EMER EXIT LIGHTS switch not in ARMED position.

3 NO SMOKING Switch

OFF – the NO SMOKING signs are not illuminated.

AUTO – the NO SMOKING signs are illuminated or extinguished automatically with reference to airplane configuration (refer to the Lighting System Description section).

ON – the NO SMOKING signs are illuminated.

4 SEAT BELTS Switch

OFF – the FASTEN SEAT BELTS and RETURN TO SEAT signs are not illuminated.

Copyright © The Boeing Company. See title page for details.

AUTO – the FASTEN SEAT BELTS and RETURN TO SEAT signs are illuminated or extinguished automatically with reference to airplane configuration (refer to the Lighting System Description section).

ON – the FASTEN SEAT BELTS and RETURN TO SEAT signs are illuminated.

Passenger Cabin

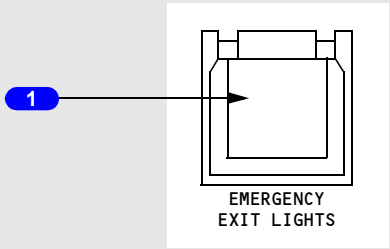

AFT ATTENDANT PANEL

1 Passenger Cabin Emergency Lights Switch (guarded)

On – illuminates all emergency lights and bypasses flight deck control.

Doors

Cabin Door

[Original Flight Deck Door]

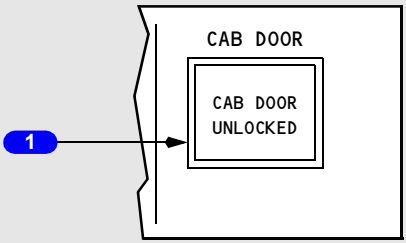

AISLE STAND

1 Cabin Door (CAB DOOR) Lock Switch

Illuminated (amber) – cabin door is unlocked.

Push – with DC power available, locks cabin door

Copyright © The Boeing Company. See title page for details.

Flight Deck Security Door

[New Flight Deck Security Door]

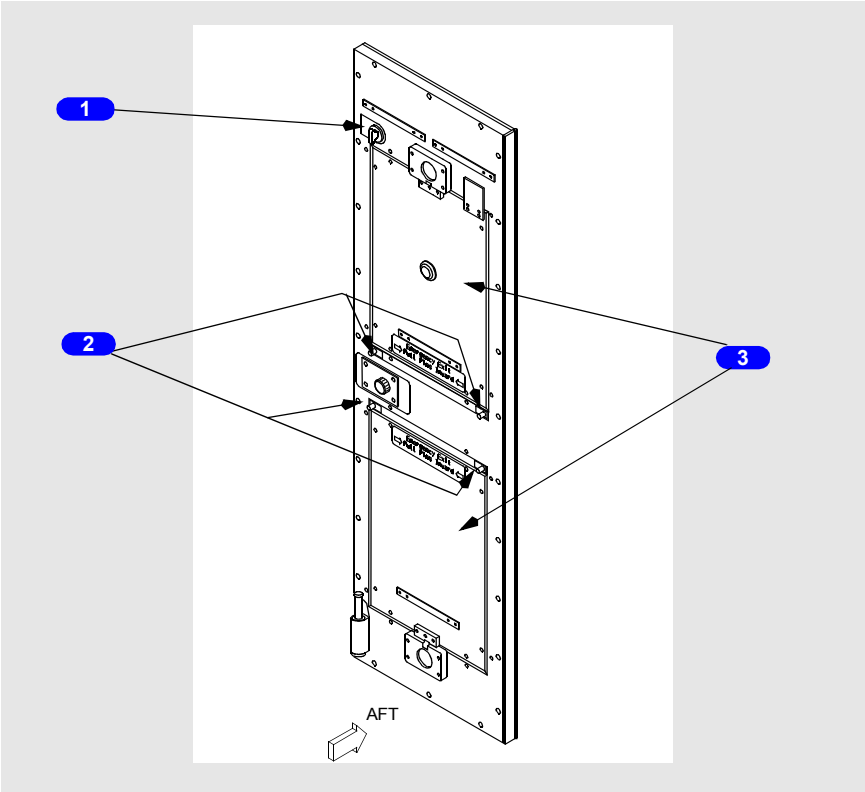

1 Deadbolt

2 Release Pins

Pull pins inward - manually separates decompression panel from a jammed door to allow panel opening and egress.

3 Decompression Panel

Provides emergency egress path and automatically opens during cabin decompression.

Copyright © The Boeing Company. See title page for details.

Flight Deck Emergency Access Panel

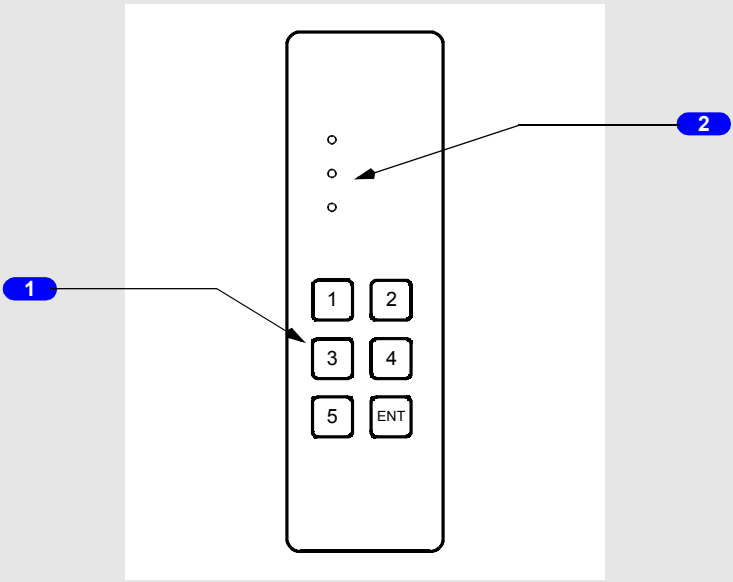

PASSENGER SIDE DOOR POST

1 Keypad

Push - enters 3 to 8 digit emergency numeric access code. Entry of correct emergency access code sounds flight deck chime.

2 Access Lights

Illuminated (red) - door locked.

Illuminated (amber) - correct emergency access code entered.

Illuminated (green) - door unlocked.

Copyright © The Boeing Company. See title page for details.

Flight Deck Access System Switch

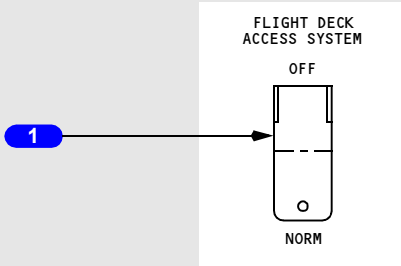

FLIGHT DECK SIDE DOOR POST

1 Flight Deck Access System Switch

OFF - removes electrical power from door lock.

NORM (Normal) - flight deck access system configured for flight.

Flight Deck Door Lock Panel

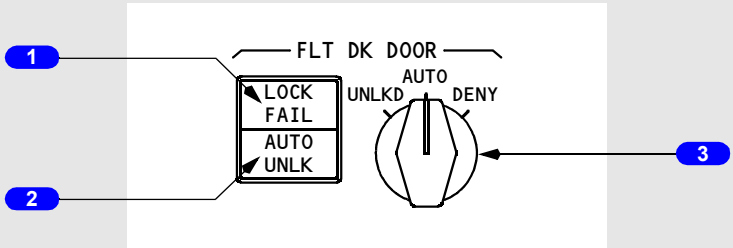

AISLE STAND

1 LOCK FAIL Light

Illuminated (amber) - Flight Deck Door Lock selector in AUTO and door lock has failed or Flight Deck Access System switch is OFF.

2 AUTO Unlock (UNLK) Light

Illuminated (amber) - correct emergency access code entered in keypad. AUTO UNLK light flashes and continuous chime sounds before timer expires and door unlocks.

Copyright © The Boeing Company. See title page for details.

3 Flight Deck (FLT DK) Door Lock Selector

Spring loaded to AUTO. Selector must be pushed in to rotate from AUTO to UNLKD. Selector must not be pushed in to rotate from AUTO to DENY.

UNLKD - door unlocked while selector in UNLKD.

AUTO - door locked. Allows door to unlock after entry of emergency access code and expiration of timer, unless crew takes action.

DENY - rejects keypad entry request and prevents further emergency access code entry for a time period.

Exterior Door Annunciator Lights

[Option - Typical 737-600 without airstairs]

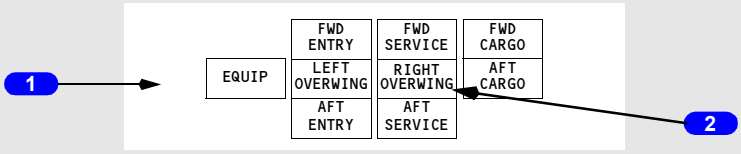

FORWARD OVERHEAD PANEL

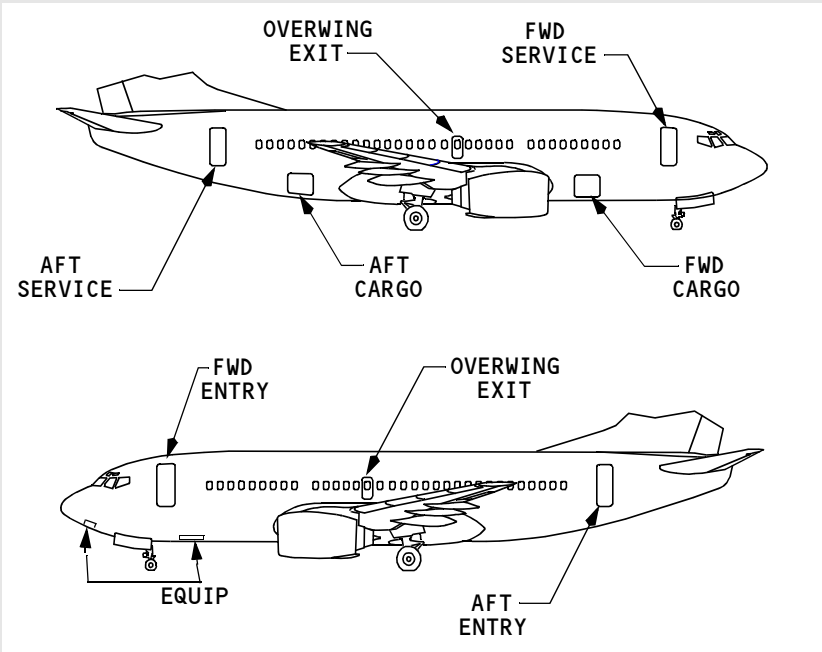

Copyright © The Boeing Company. See title page for details.

[Option - Typical 737-700 without airstairs]

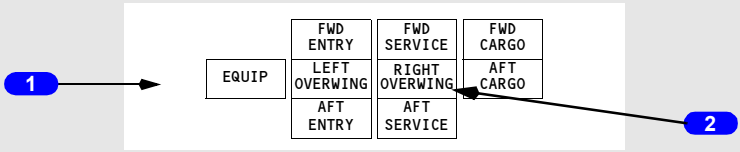

FORWARD OVERHEAD PANEL

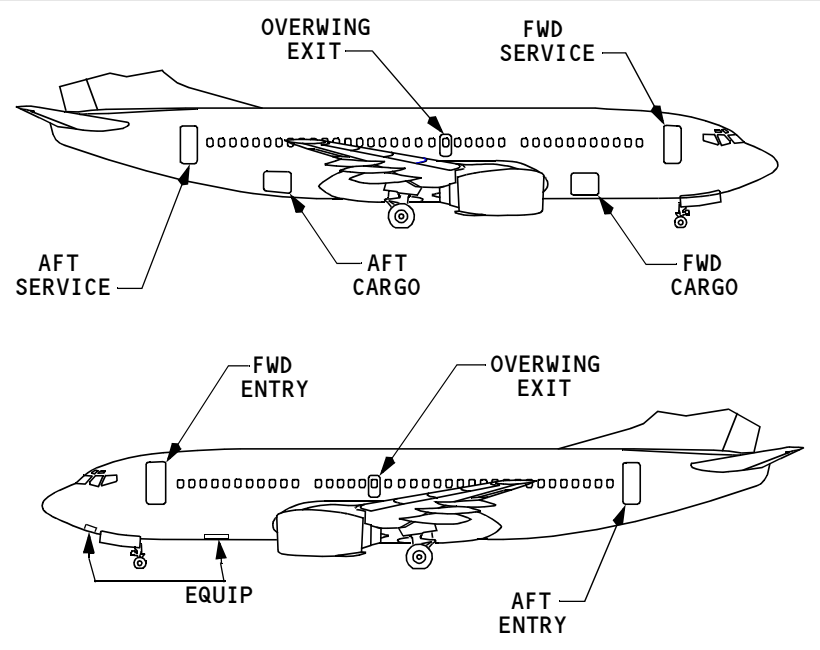

Copyright © The Boeing Company. See title page for details.

[Option - Typical 737-800/900 with airstairs and winglets]

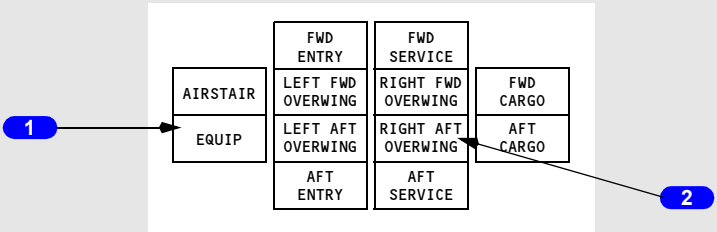

FORWARD OVERHEAD PANEL

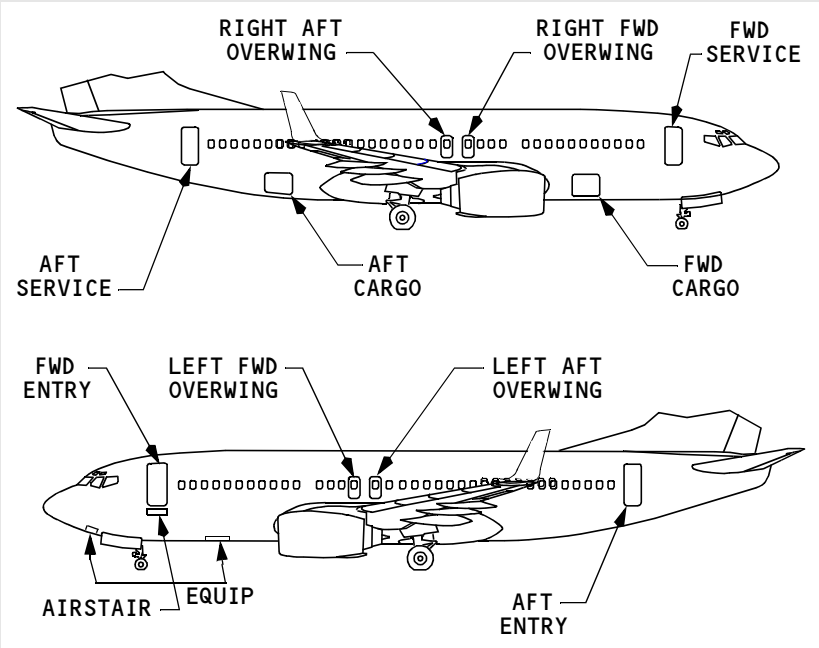

Copyright © The Boeing Company. See title page for details.

[Option - Typical 737-900 with airstairs]

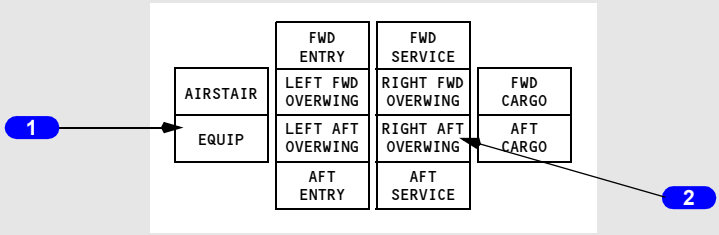

FORWARD OVERHEAD PANEL

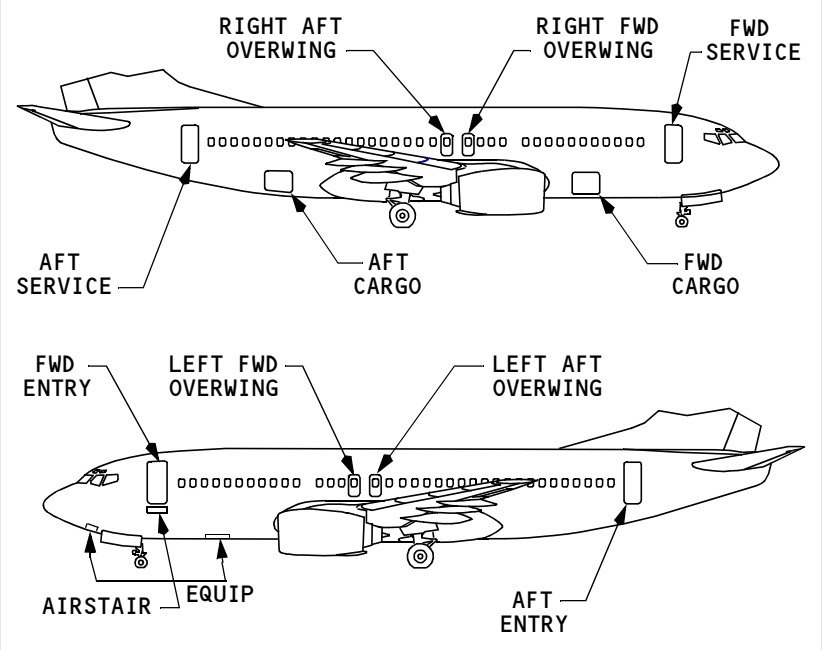

1 Exterior Door Annunciations

Illuminated (amber) – related door is not closed and locked.

2 Overwing Exit Annunciations

Illuminated (amber) –.

- related overwing exit is not closed and locked
- related flight lock failed to engage when commanded locked.

Copyright © The Boeing Company. See title page for details.

Passenger Entry/Galley Service Doors

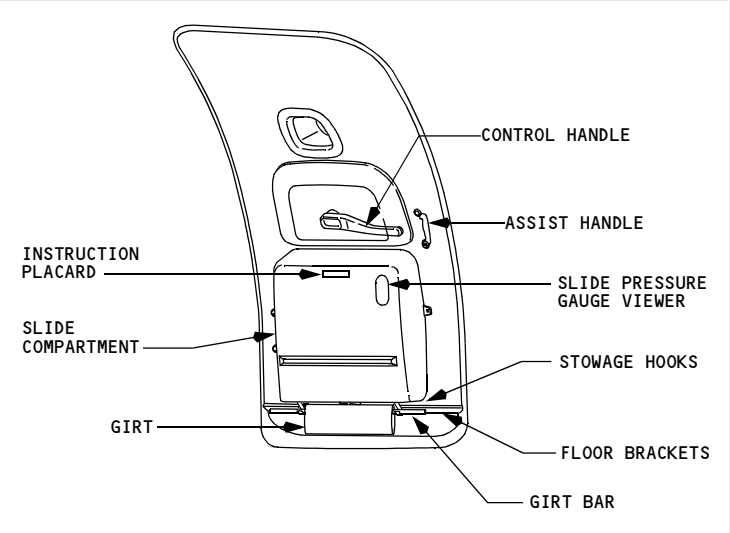

PASSENGER CABIN

Oxygen

Oxygen Panel

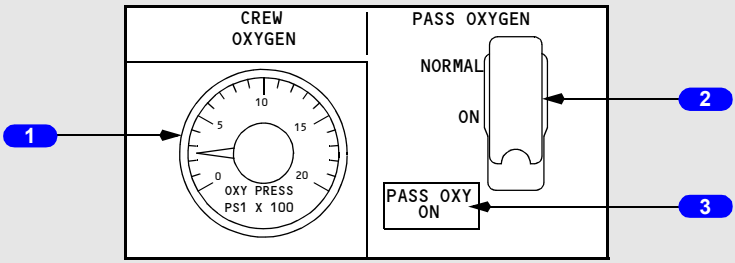

AFT OVERHEAD PANEL

1 Flight CREW OXYGEN Pressure Indicator

Indicates pressure at the crew oxygen cylinder.

2 Passenger Oxygen (PASS OXYGEN) Switch

NORMAL – (guarded position) passenger masks drop and passenger oxygen system activated automatically if cabin altitude climbs to 14,000 feet

Copyright © The Boeing Company. See title page for details.

ON – activates system and drops masks if automatic function fails.

3 Passenger Oxygen On Light

Illuminated (amber) – passenger oxygen system is operating and masks have dropped.

Oxygen Mask Panel

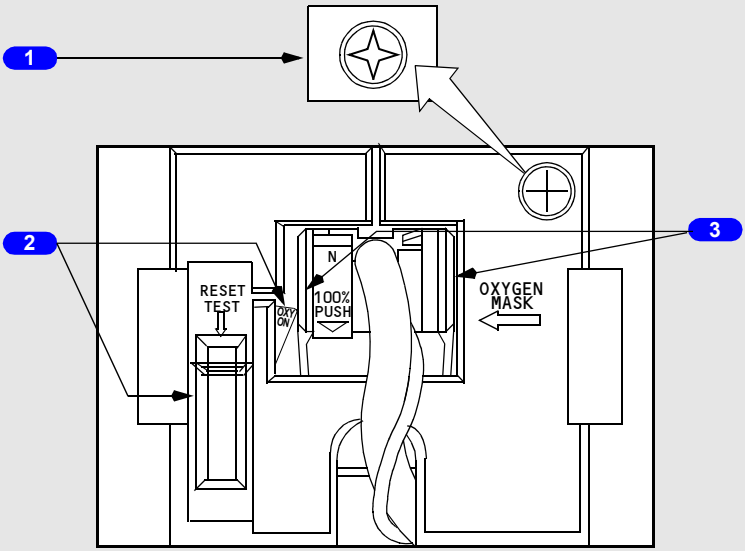

CREWMEMBER STATION

1 Oxygen Flow Indicator

Indicates a yellow cross when oxygen is flowing.

2 RESET/TEST Slide Lever

Push –

- if mask is stowed, activates oxygen flow momentarily to test regulator
- if mask is not stowed and stowage box doors are closed, retracts OXY ON flag, shuts off oxygen, and shuts off microphone.

3 Inflation Levers

Squeeze and pull up –

- releases mask from stowage box
- releases OXY ON flag when stowage box doors open

Copyright © The Boeing Company. See title page for details.

- activates oxygen and microphone
- inflates mask harness when inflation lever is squeezed
- flow indicator shows a yellow cross momentarily as harness inflates.

Oxygen Mask and Regulator

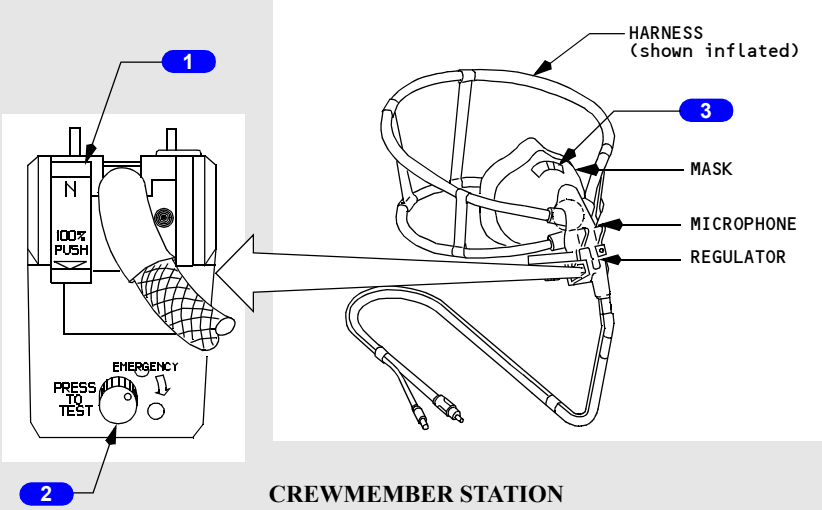

CREWMEMBER STATION

1 NORMAL/100% Switch

N (normal) – supplies air/oxygen mixture on demand (ratio depends on cabin altitude).

100% – supplies 100% oxygen on demand.

2 Oxygen Mask EMERGENCY/Test Selector (rotary)

Rotate – supplies 100% oxygen under positive pressure at all cabin altitudes.

PRESS TO TEST – tests positive pressure supply to regulator.

3 Smoke Vent Valve Selector

Up - vent valve closed.

Down - vent valve open, allowing oxygen flow to smoke goggles.

Copyright © The Boeing Company. See title page for details.

Forward Airstairs

Interior and Exterior Controls

[Option]

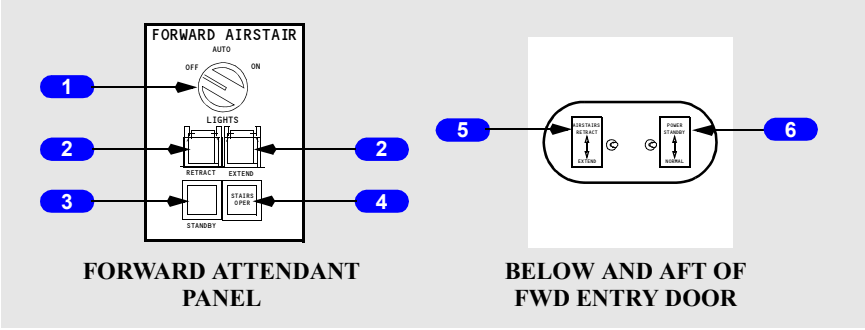

FORWARD ATTENDANT PANEL

BELOW AND AFT OF FWD ENTRY DOOR

1 LIGHTS Switch

AUTO – the airstair tread lights illuminate automatically upon airstair extension and extinguish upon retraction.

ON – illuminates the airstair tread lights.

2 Normal Control Switches

Note: AC and DC electrical power must be available on airplane.

RETRACT – retracts the airstair. The handrail extensions must be stowed prior to retracting the airstair.

EXTEND – extends the airstair.

3 STANDBY Control Switch

Note: Switch must be held in while using EXTEND or RETRACT. Battery switch must be ON.

Extend – extends the airstair.

Retract – retracts the airstair.

CAUTION: Use of standby bypasses all safety circuits. Airstair handrail extensions must be stowed or substantial damage could result.

4 STAIRS Operating (OPER) Light

Illuminated (amber) – indicates the airstair is in transit.

Copyright © The Boeing Company. See title page for details.

5 AIRSTAIRS Control Switch

EXTEND – extends the airstair.

RETRACT – retracts the airstair.

6 POWER Switch

(spring-loaded to NORMAL)

NORMAL – requires both AC and DC power.

STANDBY – requires DC power.

Copyright © The Boeing Company. See title page for details.

Water System Controls

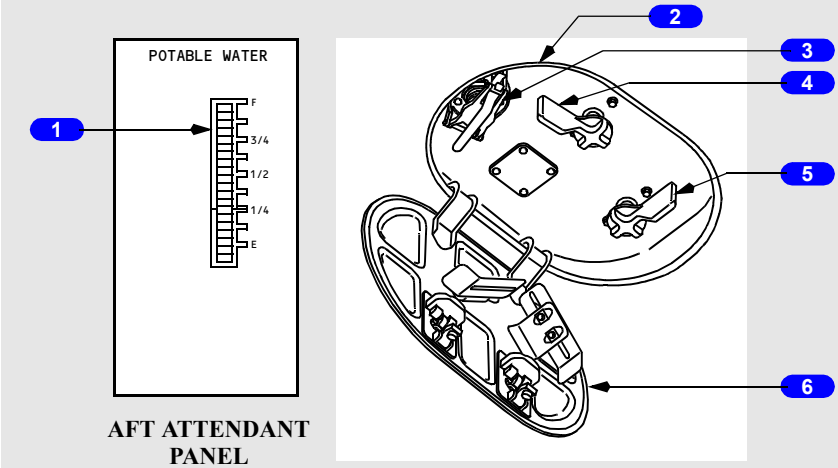

AFT ATTENDANT PANEL

BELOW AFT ENTRY DOOR

1 Water Quantity Indicator

Indicates quantity of water in reservoir.

2 Water System Service Panel

3 Fill Fitting

Used to fill tank.

4 Fill and Overflow Valve Handle

Open - enables filling or gravity draining water tank.

Closed - normal position.

5 Tank Drain Valve Handle

Open - drains water from tank.

Closed - normal position.

6 Access Panel

Cannot be closed unless the Fill and Overflow Valve and Tank Drain Valve Handles are in the closed position.

Copyright © The Boeing Company. See title page for details.

Lavatory Controls

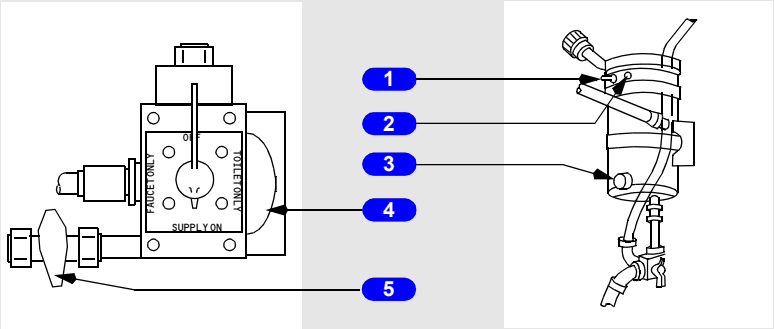

LAVATORY SINK CABINET

1 Water Heater Switch

On – activates the water heater.

2 Water Heater Light

Illuminated - heater operating.

3 Temperature Control Switch

4 Water Supply Selector Valve

SUPPLY ON – provides water to lavatory sink faucets and water heater (normal position).

FAUCET ONLY– water is supplied to faucet only.

OFF – shuts off water to lavatory sink faucets and water heater.

TOILET ONLY– water is supplied to toilet only.

5 Drain Valve

Located in the forward lavatory.

Copyright © The Boeing Company. See title page for details.

Introduction

This chapter describes miscellaneous airplane systems, including:

- lighting systems
- oxygen systems
- fire extinguishers
- emergency equipment
- doors and windows
- cargo compartments
- emergency egress
- flight deck seats
- galleys
- water systems
- lavatories
- airstairs.

Lighting Systems

Lighting systems described in this chapter include:

- exterior lighting
- flight deck lighting
- passenger cabin lighting
- emergency lighting.

Exterior Lighting

Exterior lighting consists of these lights:

- landing
- runway turnoff
- taxi
- logo
- position (navigation)
- strobe
- anti–collision
- wing illumination
- wheel well.

Retractable Landing Lights

Retractable landing lights are installed in the lower airplane fuselage. The lights are designed to extend and shine forward, parallel to the waterline of the airplane. The lights may be extended at any speed.

Fixed Landing Lights

Two fixed landing lights are in the wing leading edge. The lights shine forward and down in a fixed position.

Runway Turnoff Lights

Runway turnoff lights are in each wing root. The lights illuminate the area in front of the main gear.

Copyright © The Boeing Company. See title page for details.

Taxi Lights

The taxi light is mounted on the nose wheel strut and points in the same direction as the nose wheel.

Logo Lights

Logo lights are located on the top of each horizontal stabilizer surface to point light on both sides of the vertical stabilizer.

Position Lights

The navigation lights are the standard red (left forward wingtip), green (right forward wingtip), and white (aft tip of both wings) position lights.

Strobe Lights

Three high intensity white strobe lights are installed on the left forward wing tip, right forward wing tip, and tail cone.

Anti–collision Lights

Two red anti–collision strobe lights are located on the top and bottom of the fuselage.

Wing Illumination Lights

Wing lights are installed on the fuselage and illuminate the leading edge of the wing.

Wheel Well Lights

Lights are installed in the wheel well of the nose gear and each main gear.

Copyright © The Boeing Company. See title page for details.

Exterior Lighting Locations

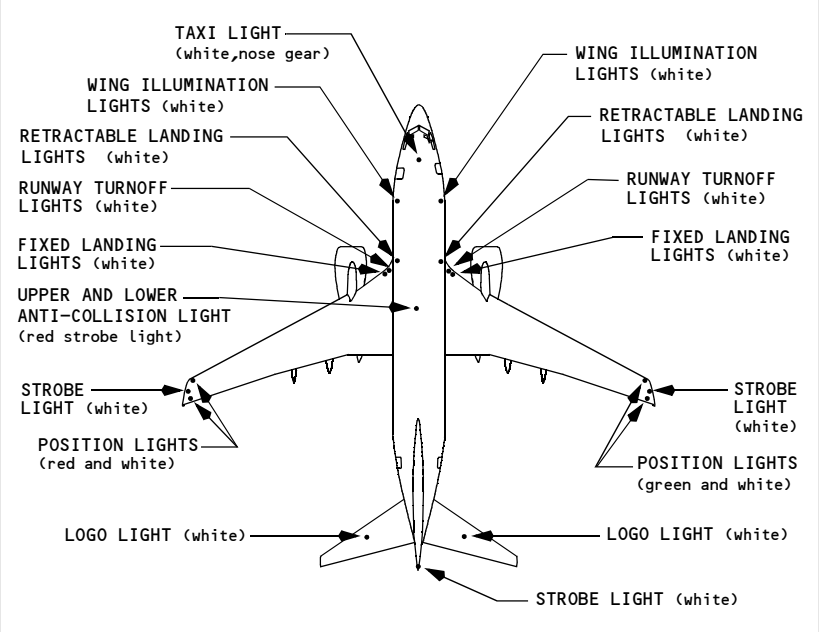

Copyright © The Boeing Company. See title page for details.

[Option: Winglets]

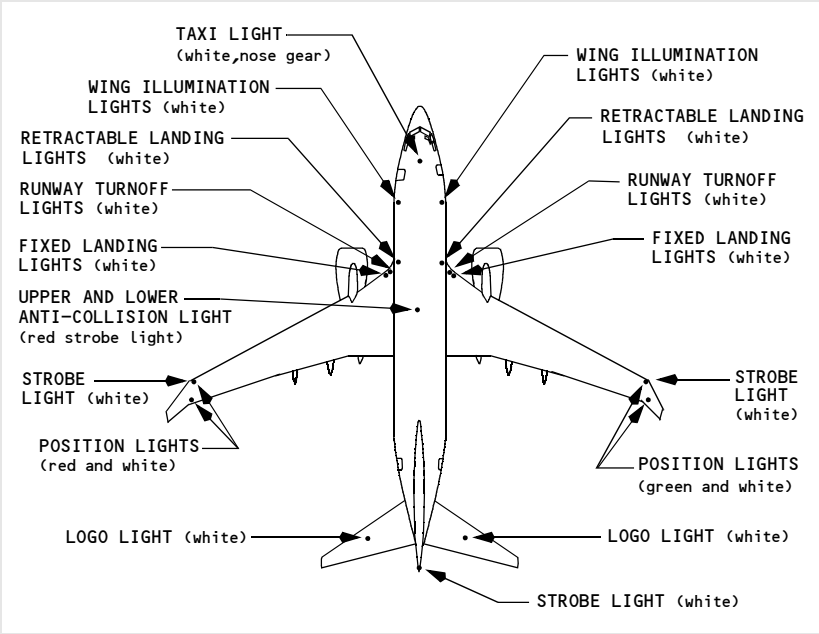

Flight Deck Lighting

Flight deck lighting is provided for panel illumination, area lighting and localized illumination. Dome lights supply general flight deck flood lighting. The glareshield supplies background light for the main instrument panels. Each instrument and instrument panel has its own integral lights. Floodlights are installed for the MCP, aisle stand, and aft circuit breaker panel.

Map lights, chart lights and utility lights are available at the pilot stations, each with individual controls.

If normal electrical power is lost, standby electrical power is automatically provided to the standby compass light, dome lights, instrument flood lights and selected system information and warning lights.

Passenger Cabin Lighting

Passenger cabin lighting is supplied by incandescent and fluorescent lights. General cabin lighting is provided by window lights, ceiling lights, and entry lights. Reading lights are located above each passenger seat in the passenger service unit. Lights are also installed in the lavatories and galleys.

Copyright © The Boeing Company. See title page for details.

Passenger Cabin Signs

The passenger cabin signs are controlled by a switch on the forward overhead panel. With Auto selected, the signs are controlled automatically by reference to landing gear and flap positions:

FASTEN BELTS and RETURN TO SEAT signs:

- illuminate when flaps or gear are extended
- extinguish when flaps and gear are retracted.

NO SMOKING signs:

- illuminate when gear is extended
- extinguish when gear is retracted.

All passenger signs can be controlled manually by positioning the respective switch to ON or OFF.

When the passenger cabin signs illuminate or extinguish, a low tone sounds over the PA system.

Emergency Lighting

Exit lights are located throughout the passenger cabin to indicate the approved emergency exit routes. The system is controlled by a switch on the overhead panel. The switch has three positions, OFF, ARMED and ON and is guarded to the ARMED position. With the switch in the ARMED position, the emergency exit lights are normally extinguished. If electrical power to DC bus No. 1 fails or if AC power has been turned off, the emergency exit lights illuminate automatically.

The emergency exit lights may also be illuminated by a switch on the aft attendants panel. Lifting the guard and pushing the switch ON overrides the flight deck control and illuminates the emergency exit lights. Control from this panel is available in the event of failure of the automatic control.

The flight deck aft DOME light contains a separate bulb that is powered by the emergency lighting system to provide for flight deck evacuation.

Interior Emergency Lighting

Interior emergency exit lights are located:

- in the lower inboard corner of stowage bins to illuminate the aisle
- over the entry/service and overwing emergency hatches to indicate the door and hatch exits
- in the ceiling to locate the exits and provide general illumination in the area of the exits.

Self–illuminating exit locator signs are installed at the forward, middle, and aft end of the passenger cabin.

Copyright © The Boeing Company. See title page for details.

Floor proximity emergency escape path lighting consists of locator lights spaced at regular intervals down one side of the aisle. Lighted arrows point to overwing exits and a lighted EXIT indicator is near the floor by each door and overwing exit. Escape path markings are provided for visual guidance for emergency cabin evacuation when other sources of cabin lighting are obscured.

Interior Emergency Lighting

[Option: Photoluminescent Lighting System]
Interior emergency exit lights are located:

- in the lower inboard corner of stowage bins to illuminate the aisle
- over the entry/service and overwing emergency hatches to indicate the door and hatch exits
- in the ceiling to locate the exits and provide general illumination in the area of the exits.

Self–illuminating exit locator signs are installed at the forward, middle, and aft end of the passenger cabin.

A photoluminescent floor path marking system is installed along the cabin aisle. The photoluminescent material, when excited by light, will glow and provide exit path guidance. At the exit, electrically operated lights and markers provide exit identification.

The photoluminescent strips need to be properly charged. The table below contains charging information and can be used to determine how long the strips remain illuminated. For charging, the cabin ceiling, and sidewall lights need to be on at full intensity, and the strips should not be covered or blocked.

Copyright © The Boeing Company. See title page for details.

Charge Scenario	Photoluminescent Duration (Hours)	Remarks
First flight of the day - bins closed, no passengers • 5 minute charge • 10 minute charge • 15 minute charge • 30 minute charge • 45 minute charge	• 4.25 • 8 • 9.5 • 14 • 16	Close overhead bins during charging and cabin activity is limited to minor aisle traffic of crew and personnel. Passengers will shadow the system and are not allowed on board during charging.
First flight of the day - bins open, no passengers • 15 minute charge • 30 minute charge	• 5.75 • 7.5	Cabin activity is limited to minor aisle traffic of crew and personnel. Passengers will shadow the system and are not allowed on board during charging.
Photoluminescent duration can be extended beyond the initial charge, by using the following charge scenarios:		
In flight/taxi - with cabin lighting on	No limit with ceiling lights on dim or greater	
In flight/taxi - with cabin lighting off • 15 minute charge • 30 minute charge	• 8 • 11.25	Begin charging prior to previous discharge duration ending.

Copyright © The Boeing Company. See title page for details.

Charge Scenario	Photoluminescent Duration (Hours)	Remarks
Ground turn with bin doors open and passengers in seats • 15 minute charge • 30 minute charge	• 6.75 • 9	Bin doors can be open during charging. Passenger loading and unloading periods cannot be included in the charge time. Passengers can be on the airplane. Begin charging prior to previous discharge duration.
Ground turn with bin doors open and no passengers in seats • 15 minute charge • 30 minute charge	• 7.5 • 10	Bin doors can be open during charging. Passenger loading and unloading periods cannot be included in the charge time. Passengers cannot be on the airplane. Begin charging prior to previous discharge duration.

Exterior Emergency Lighting

Exterior emergency lights illuminate the escape slides. The fuselage installed escape slide lights are adjacent to the forward and aft service and entry doors. Lights are also installed on the fuselage to illuminate the overwing escape routes and ground contact area.

Copyright © The Boeing Company. See title page for details.

Emergency Exit Lighting

[Option - 737-600/700]

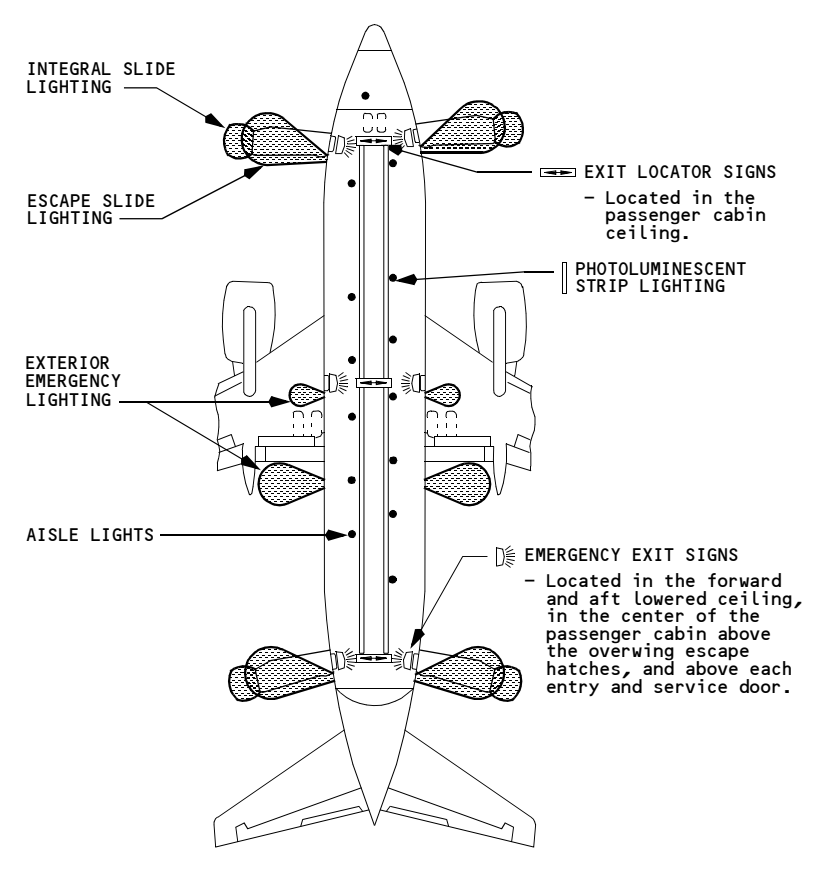

Copyright © The Boeing Company. See title page for details.

[Option - 737-800/900]

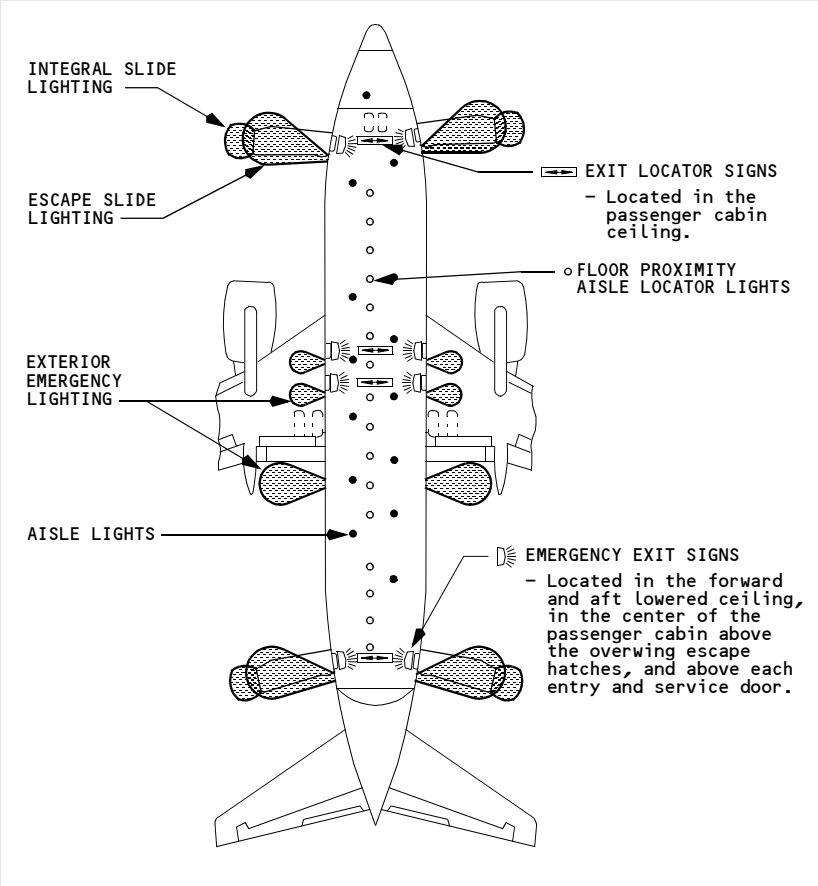

Oxygen Systems

Two independent oxygen systems are provided, one for the flight crew and one for the passengers. Portable oxygen cylinders can be located throughout the airplane for emergency use. These cylinders are normally found in the forward and aft areas of the passenger cabin.

Copyright © The Boeing Company. See title page for details.

Oxygen System Schematic

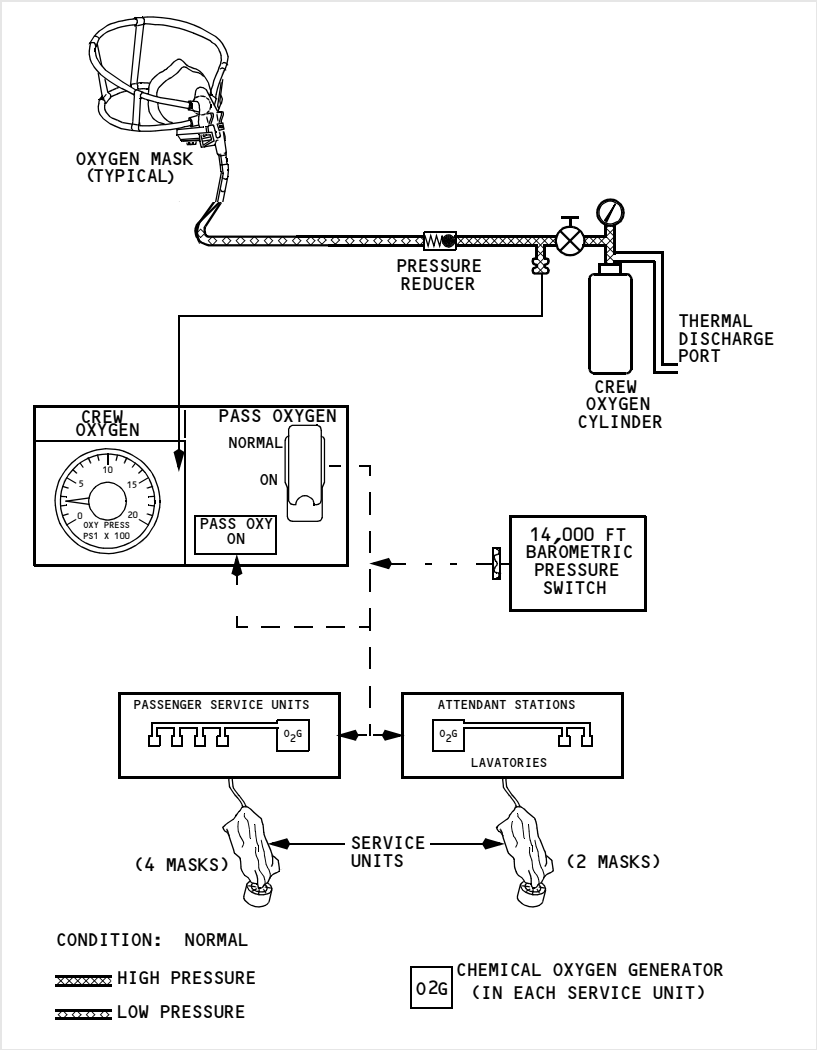

Copyright © The Boeing Company. See title page for details.

Flight Crew Oxygen System

The flight crew oxygen system uses quick-donning, diluter-demand masks/ regulators located at each crew station. Oxygen is supplied by a single cylinder. Oxygen pressure is displayed on the Oxygen Pressure indicator located on the aft overhead panel when the battery switch is ON. Oxygen flow is controlled through an in-line, pressure-reducing regulator to supply low-pressure oxygen to the regulator on the mask. System pressure may be as high as 1850 psi.

Oxygen flow is controlled by a regulator mounted on the oxygen mask. By pushing the NORMAL/100% control lever, the regulator is adjusted from the air/oxygen mixture to 100% oxygen. By rotating the EMERGENCY/PUSH TO TEST selector, the regulator is adjusted to supply oxygen under pressure.

Flight Crew Oxygen Mask Usage

Donning Instructions

To don the mask, grasp the regulator with the thumb and forefinger and remove from stowage. Squeezing the inflation levers and removing from the box:

- inflates the mask harness
- momentarily displays a colored oxygen flow indicator.
- Place the mask over the head and release the levers. The harness contracts to fit the mask to head and face.

The observer's oxygen mask, regulator, and harness unit is the same as the pilots'.

Copyright © The Boeing Company. See title page for details.

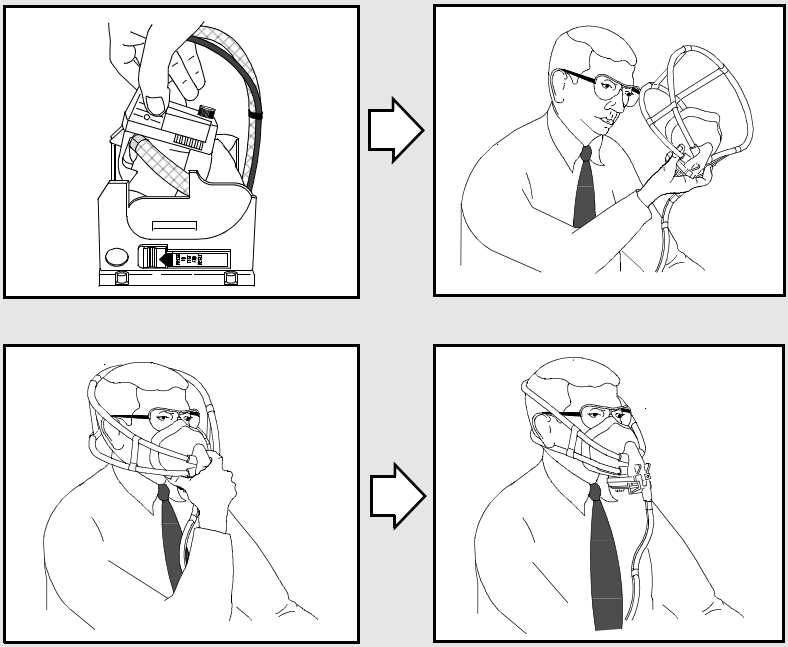

Mask Donning

Portable Protective Breathing Equipment

Protective Breathing Equipment (PBE/Smoke Hood) devices for crew use (for combating fires and/or entering areas of smoke or fume accumulation) may be stowed throughout the airplane; however, they are normally found in the forward and aft sections of the passenger cabin. The device is placed over the head and, when activated, provides approximately 15 to over 20 minutes of oxygen depending upon the device used. Manufacturer's operating instructions are placarded on the container.

Passenger Oxygen System

The passenger oxygen system is supplied by individual chemical oxygen generators located at each Passenger Service Unit (PSU). Four continuous flow masks are connected to each generator. A generator with two masks is located above each attendant station and in each lavatory.

Copyright © The Boeing Company. See title page for details.

The system is activated automatically by a pressure switch at a cabin altitude of 14,000 feet or when the Passenger Oxygen Switch on the aft overhead panel is positioned to ON. When the system is activated, the PASS OXY ON light illuminates and OVERHEAD illuminates on the Master Caution System.

Activating the system causes the masks to drop from the stowage compartments. The oxygen generators are activated when any mask in the unit is pulled down. Pulling one mask down causes all masks in that unit to come down and 100% oxygen flows to all masks. A green in–line flow indicator is visible in the transparent oxygen hose whenever oxygen is flowing to the mask. Oxygen flows for approximately 12 minutes and cannot be shut off. If the passenger oxygen is activated and a PSU oxygen mask compartment does not open, the masks may be dropped manually.

PSU Oxygen Mask Compartment

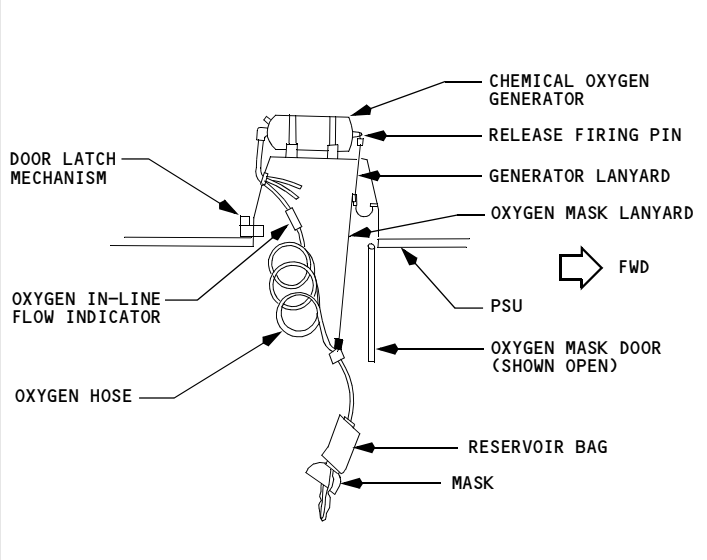

WARNING: When using passenger oxygen, the "NO SMOKING" sign should be strictly observed. Once the generator is activated, the flow of oxygen is constant, whether or not the mask is being worn.

WARNING: Do not use passenger oxygen with cabin altitude below 14,000 feet when smoke or an abnormal heat source is present. The use of passenger oxygen does not prevent the passengers from inhaling smoke. Air inhaled is a mixture of oxygen and cabin air.

Copyright © The Boeing Company. See title page for details.

Passenger Portable Oxygen

First aid and supplemental portable oxygen cylinders are installed at suitable locations in the passenger cabin. The cylinders are fitted with a pressure gage, pressure regulator and on–off valve. The cylinders are pressurized to 1800 psi. At this pressure and a temperature of 70 degrees Fahrenheit, (21 degrees Celsius) the cylinders have a capacity of 4.25 cubic feet (120 liters) of free oxygen. Two continuous flow outlets are provided on each cylinder, one regulates flow at two liters per minute for walk–around; the second outlet provides flow at four liters per minute. The four–liter flow is used for first aid.

Duration can be determined by dividing capacity by outflow (120 liters divided by 4 liters/minute = 30 minutes).

Passenger Portable Oxygen Schematic

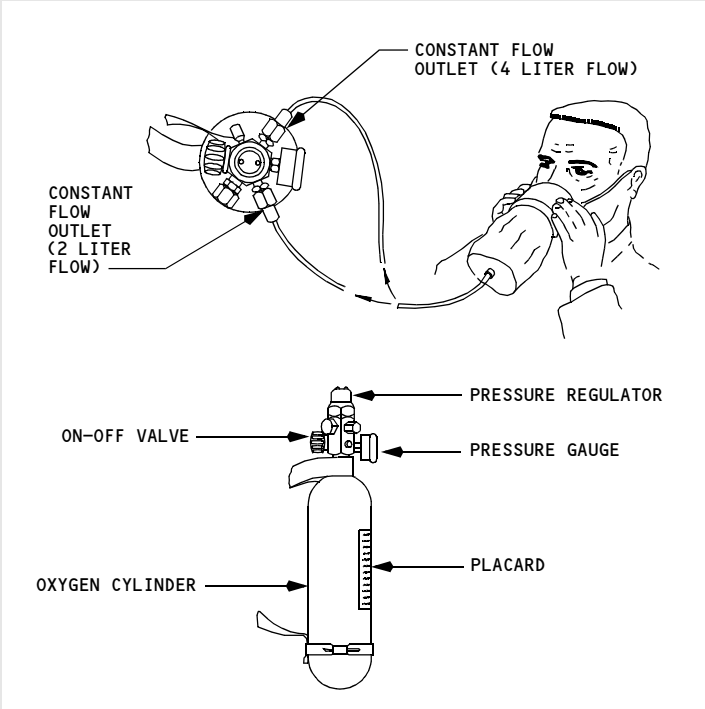

Copyright © The Boeing Company. See title page for details.

Fire Extinguishers

Fire extinguishers are located in the flight deck and passenger cabin.

Water Fire Extinguishers

Water fire extinguishers contain a solution of water mixed with antifreeze. The container is pressurized by a CO2 cartridge when the extinguisher handle is rotated fully clockwise. The extinguisher should be used on fabric, paper or wood fires only.

To use the water fire extinguisher:

- remove from stowage
- rotate handle fully clockwise
- aim at base of fire and press trigger.

CAUTION: Do not use on electrical or grease type fires.

Water Fire Extinguisher

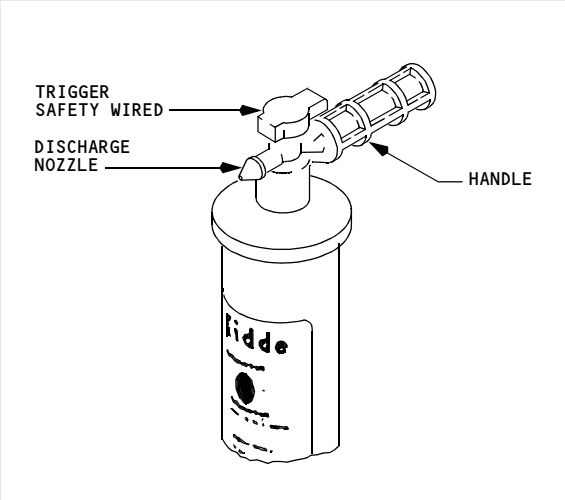

Halon (BCF) Fire Extinguishers

Halon (BCF) fire extinguishers contain a liquefied gas agent under pressure. The pressure indicator shows an acceptable pressure range, a recharge range, and an overcharged range. A safety pin with a pull ring prevents accidental trigger movement. When released the liquefied gas agent vaporizes and extinguishes the fire. The extinguisher is effective on all types of fires, but primarily on electrical, fuel and grease fires.

Copyright © The Boeing Company. See title page for details.

To use the Halon fire extinguisher:

- remove from stowage
- hold upright and remove ringed safety pin
- aim at base of fire from a distance of six feet and press top lever
- use side to side motion to suppress fire.

BCF Fire Extinguisher (Halon 1211)

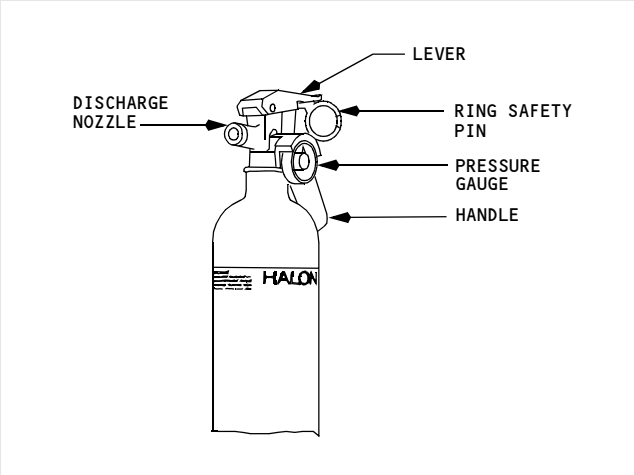

Copyright © The Boeing Company. See title page for details.

Fire Extinguisher Usage

Each class of fire calls for specialized action. Using the wrong extinguisher may do more harm than good. For your own protection, you should know these basic types, how to use them, and why.

CLASS OF FIRES There are three common classes of fire:	EXTINGUISHER TYPE
CLASS A COMBUSTABLE MATERIALS - paper, wood, fabric, rubber, certain plastics, etc., where quenching by water is effective.	TYPE A Water (H_2O) saturates material and prevents rekindling.
CLASS B FLAMMABLE LIQUIDS - gasoline, oils, greases, solvents, paints, burning liquids, cooking fats, etc., where smothering action is required.	TYPE B BCF (Halon 1211)
CLASS C LIVE ELECTRICAL - fires started by short circuit or faulty wiring in electrical, electronic equipment, or fires in motors, switches, galley equipment, etc., where a nonconducting extinguisher agent is required. NOTE: Whenever possible, electrical equipment should be de-energized before attacking a class C fire.	TYPE C BCF (Halon 1211)

WARNING: THE WRONG EXTINGUISHER ON A FIRE COULD DO MORE HARM THAN GOOD. FOR EXAMPLE, B C RATED EXTINGUISHER IS NOT AS EFFECTIVE AS H2O ON A CLASS A FIRE. WATER ON FLAMMABLE LIQUID FIRES SPREAD THE FIRE. WATER ON A LIVE ELECTRICAL FIRE COULD CAUSE SEVERE SHOCK OR DEATH.

WARNING: The concentrated agent, or the by-products created by the heat of the fire, are toxic when inhaled.

WARNING: If a fire extinguisher is to be discharged in the flight deck, then all crewmembers are to wear oxygen masks and use 100% oxygen with emergency selected.

Copyright © The Boeing Company. See title page for details.

Emergency Equipment Symbols

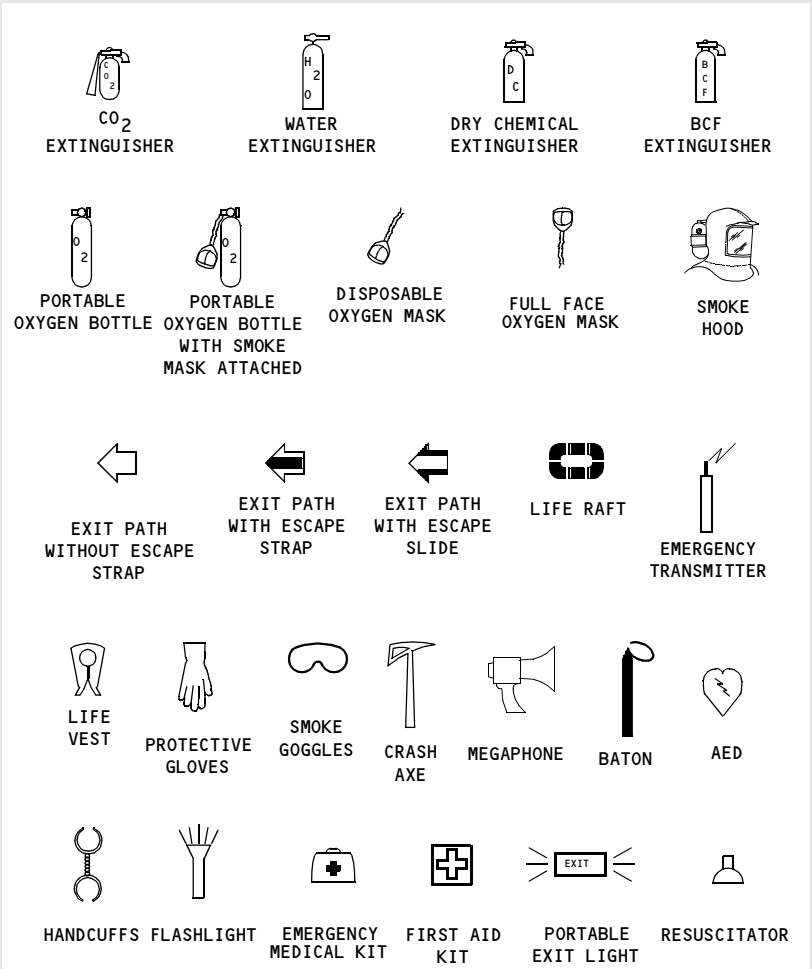

NOTE: Some symbols do not apply to all configurations.

Copyright © The Boeing Company. See title page for details.

Emergency Equipment Locations

[Option - Typical 737-600/700 with optional emergency equipment]

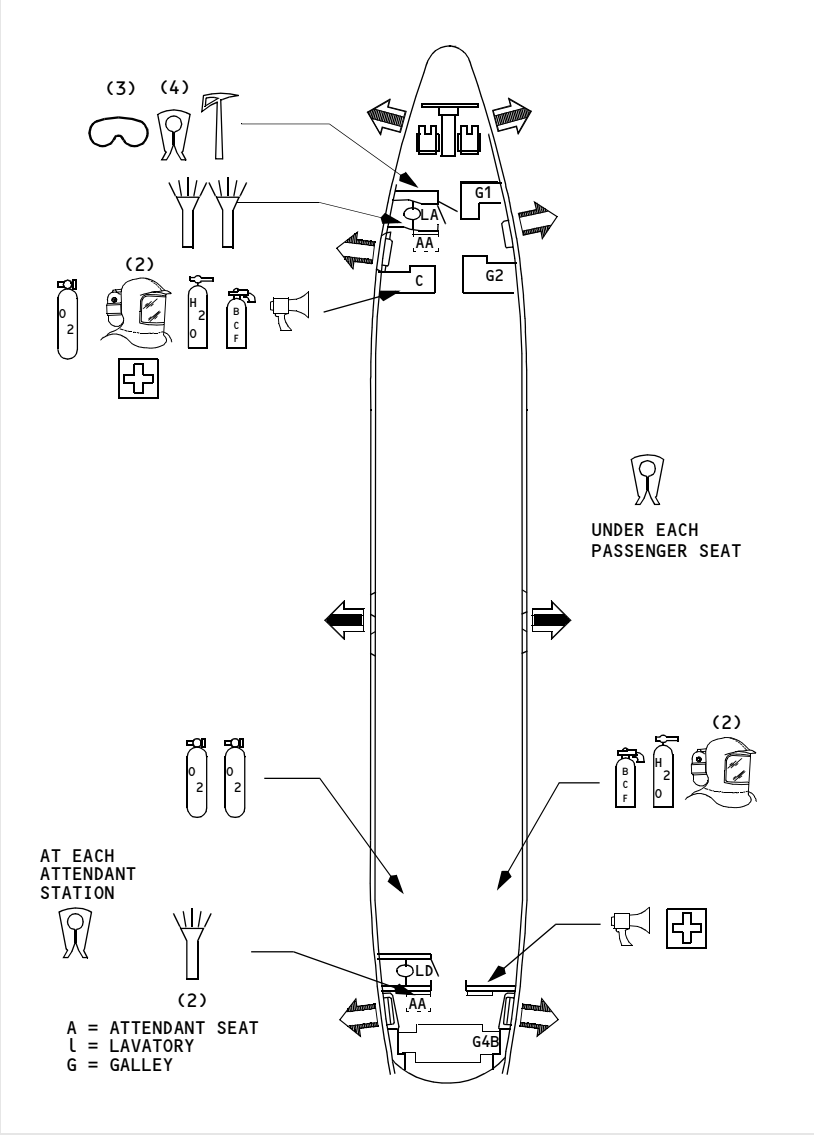

Copyright © The Boeing Company. See title page for details.

[Option - 737-800/900 with optional emergency equipment]

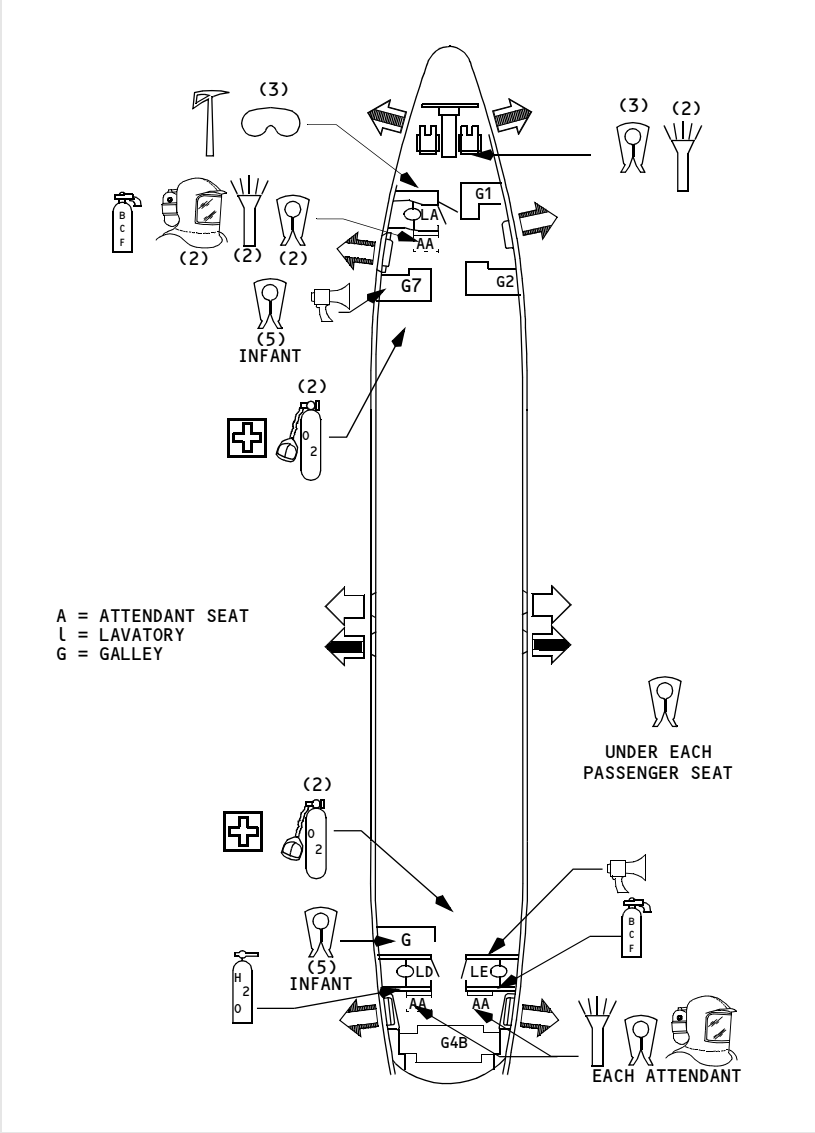

Copyright © The Boeing Company. See title page for details.

Doors and Windows

The airplane has two passenger entry doors, one cabin door (the flight deck/passenger cabin entry), two service doors and two cargo doors. There is also a center electrical and electronic (E/E) equipment access door and an equipment compartment access door on the bottom of the airplane.

The flight deck number two windows, one on the left and one on the right, can be opened by the flight crew.

Cabin Door

[Original Flight Deck Door]

An electrical and keyed lock permits the door to be opened, closed and locked from either side. With 28 Volt DC power available, the door may be electrically locked or unlocked by pressing the door lock switch on the control stand; entrance from the passenger cabin requires a key when the door is electrically locked. The door cannot be locked without electrical power.

There are four blowout panels located in the cabin door. In the event of a sudden depressurization of the flight deck, the blowout panels hinge out from the door. This uncovers openings in the door and allows the air pressure in the flight deck and passenger cabin to equalize.

An emergency exit feature is also provided which permits the release and removal of the two upper blowout panels from the door. To operate, pull on the release handle while pressing on the panel below the release handle. Panel will not release unless both ends of handle have been pulled away from their locked position.

Copyright © The Boeing Company. See title page for details.

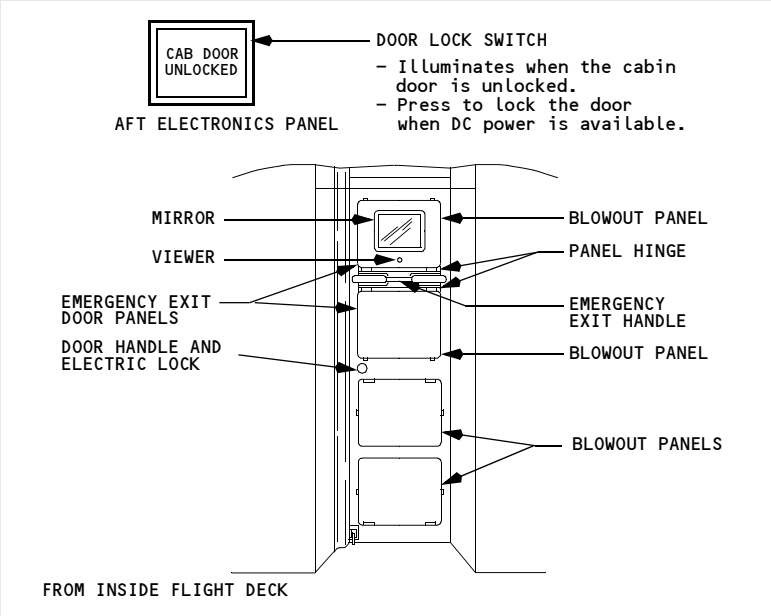

Flight Deck Security Door

New Flight Deck Security Door]

The flight deck security door meets requirements for resistance to ballistic penetration and intruder entrance. The door opens into the flight deck. When closed, the door locks when electrical power is available and unlocks when electrical power is removed. A viewing lens in the door allows observation of the passenger cabin. The door can be manually opened from the flight deck by turning the door handle. The door incorporates a deadbolt with a key lock on the passenger cabin side.

The flight deck access system consists of an emergency access panel, chime module, three position Door Lock selector, two indicator lights, and an Access System switch. The emergency access panel includes a six button keypad for entering the numeric emergency access code along with red, amber, and green lights. The red light illuminates to indicate the door is locked. When the correct emergency access code is entered, the amber light illuminates. The green light illuminates to indicate the door is unlocked.

Two indicator lights and a three position Door Lock selector are located on the aisle stand. Illumination of the amber LOCK FAIL light indicates the door lock has failed or the Access System switch is in the OFF position.

Copyright © The Boeing Company. See title page for details.

The emergency access code is used to gain access to the flight deck in case of pilot incapacitation. A flight deck chime and illumination of the amber AUTO UNLK light indicates the correct emergency access code has been entered and the door is programmed to unlock after a time delay. Selecting the DENY position on the Door Lock selector denies entry and prevents further keypad entry for several minutes. To allow entry, the selector is turned to the UNLKD position which unlocks the door while held in that position. If the emergency access code is entered and the pilot takes no action, the door unlocks after expiration of the time delay. Before the door unlocks, the chime sounds continuously and the AUTO UNLK light flashes.

By pressing "1" then "ENT" keys on the emergency access panel, the flight deck chime will sound (if programmed).

The door incorporates two pressure sensors that unlock the decompression panels in the event pressurization is lost. The decompression panels have manual release pins. Pulling the pins frees the panels allowing egress in the event the door is jammed.

Flight Deck Number Two Windows

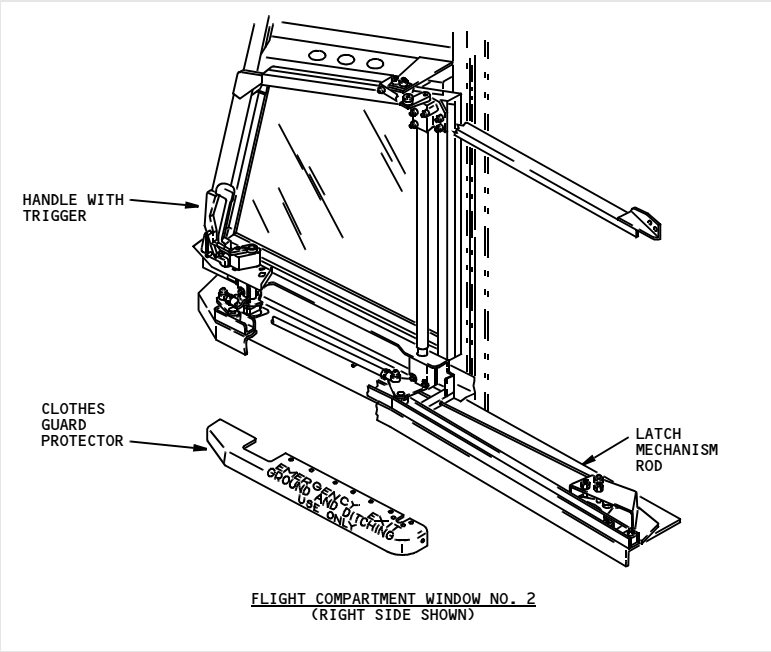

Copyright © The Boeing Company. See title page for details.

The flight deck number two windows can be opened on the ground or in flight and can be used for emergency evacuation. To open the window, depress the trigger and turn the handle back and inboard. After the window moves inboard, move it back until it locks in the open position.

To close the window, it must first be unlocked. Pull forward on the latch mechanism rod to unlock the window. Depress the trigger and move the window forward until the handle can be turned forward and outboard. When the trigger is released, the window latches.

Only the first officer's window number two window can be opened from outside the airplane.

Lower Cargo Compartments

The lower cargo compartments are designed and constructed to satisfy FAA category Class C compartment requirements. This means the compartments are designed to completely confine a fire without endangering the safety of the airplane or its occupants. The compartments are sealed and pressurized but do not have fresh air circulation and temperature control as do the upper passenger compartments.

There are two cargo compartment doors on the lower right side of the fuselage. Both are plug type, inward opening pressure doors, hinged at their upper edges and operated manually from either inside or outside the airplane. Except for slight difference in shape, both doors are similar in design and operation. The door is locked closed by four latches. Each door has a balance mechanism which creates door–open force slightly more than equal to the weight of the door. The door can therefore, with little effort, be swung open, until it engages a mechanical lock. The door can be closed easily by pulling a lanyard attached to the door, releasing the uplatch, grasping the handle and closing the door.

A pressure equalization valve is in the aft bulkhead of each compartment. The valves let only enough air flow into or out of the cargo compartments to keep the pressures nearly the same as the cabin pressure.

Blowout panels in the lower cargo compartments provide pressure relief at a greater rate than the pressure equalization valve in case the airplane pressurization is lost.

Emergency Escape

Emergency escape information included in this chapter includes:

- emergency evacuation routes
- flight deck windows
- escape slides

Copyright © The Boeing Company. See title page for details.

- escape straps
- emergency exit doors

Emergency Evacuation Routes

[Option - 737-600/700]
Emergency evacuation may be accomplished through four entry/service doors and two overwing escape hatches. Flight deck crew members may evacuate the airplane through two sliding flight deck windows.

[Option - 737-800/900]
Emergency evacuation may be accomplished through four entry/service doors and four overwing escape hatches. Flight deck crew members may evacuate the airplane through two sliding flight deck windows.

Emergency Evacuation Routes

[Option - 737-600/700]

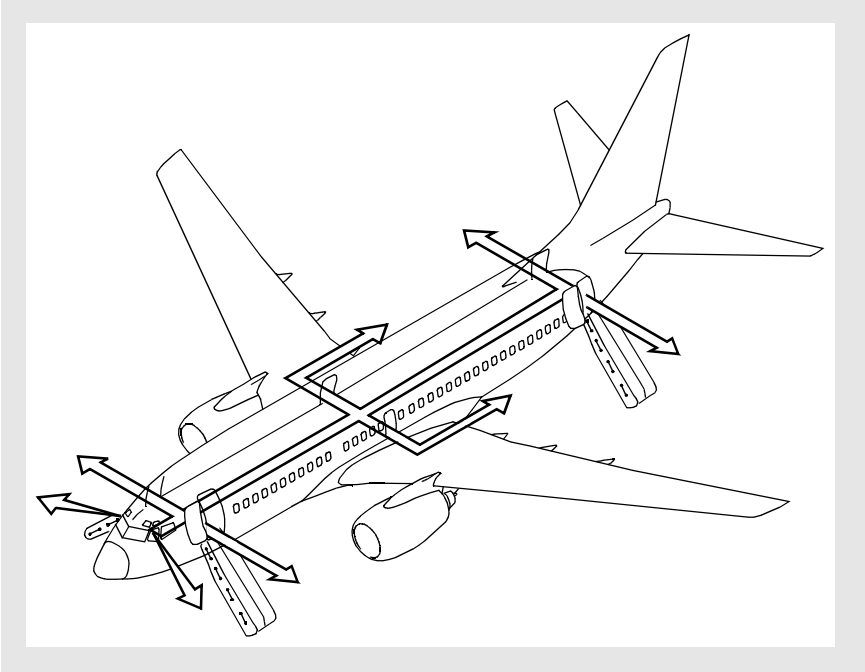

Copyright © The Boeing Company. See title page for details.

[Option - 737-800/900]

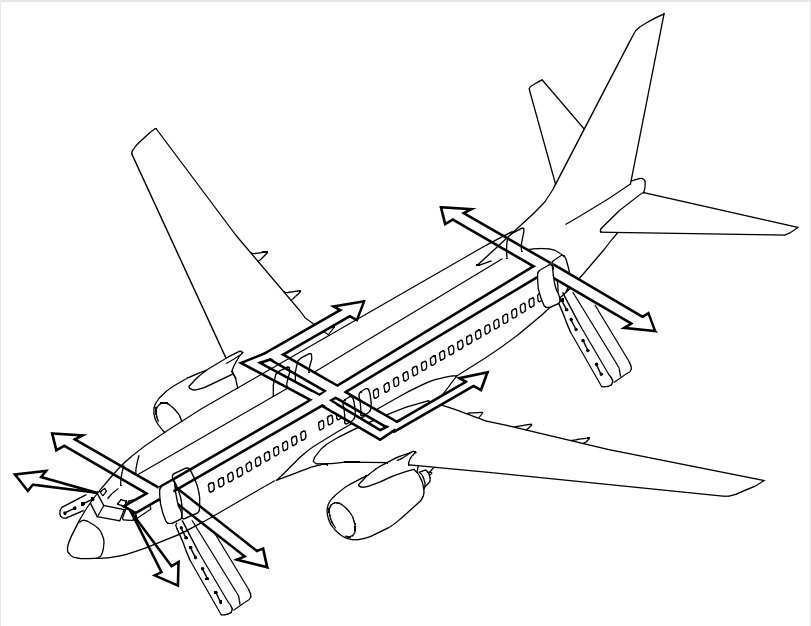

Flight Deck Window Emergency Egress

If the flight deck number two windows must be used for emergency egress, use the following procedure:

- open the window
- open the escape strap compartment (above and aft of window)
- pull on the escape strap to ensure it is securely attached
- throw the strap out the window
- sit on the window sill with upper body outside
- exit in accordance with the following illustration.

CAUTION: Ensure the escape strap is securely fastened to the airplane.

Copyright © The Boeing Company. See title page for details.

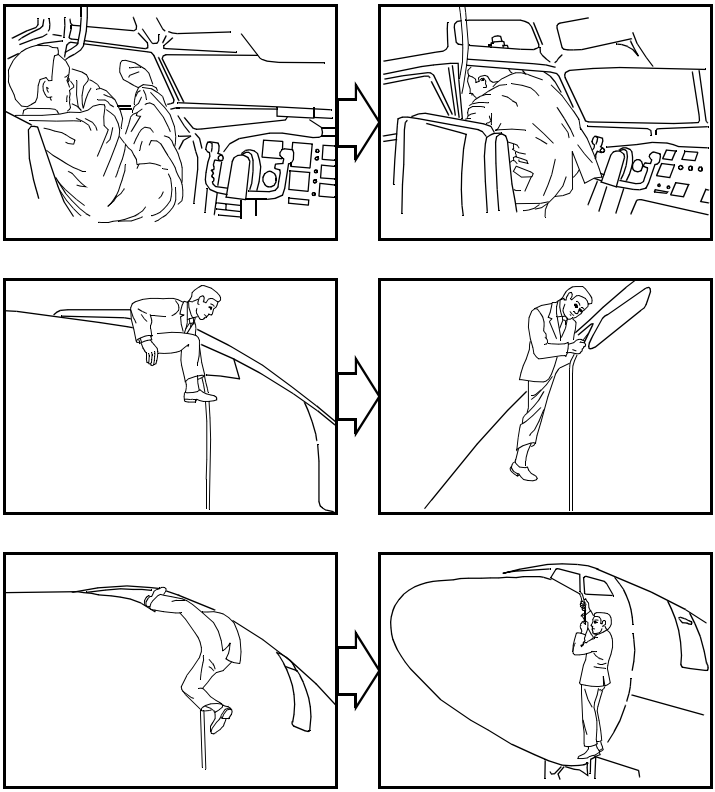

The above illustrated method of departure would probably be the easiest for most crewmembers. This technique is difficult and should be used only in extreme emergency.

Copyright © The Boeing Company. See title page for details.

Escape Slide Detachment Handle

The slide has not been certified to be part of the water landing emergency equipment. In a water environment, the slide may not properly inflate when deployed. If the deployed slide is recognized to be a potential obstruction to egress, a detachment handle is provided near the top of the slide. This handle is protected by a cover and is placarded. The escape slide is detached from the airplane by pulling the detachment handle. Once detached from the door sill, the slide is tethered to the door sill by a lanyard. A properly inflated slide could be buoyant, and useful as a flotation device for passengers in the water. Hand grips are positioned along the sides of the slide.

Escape Slide Detachment Handle

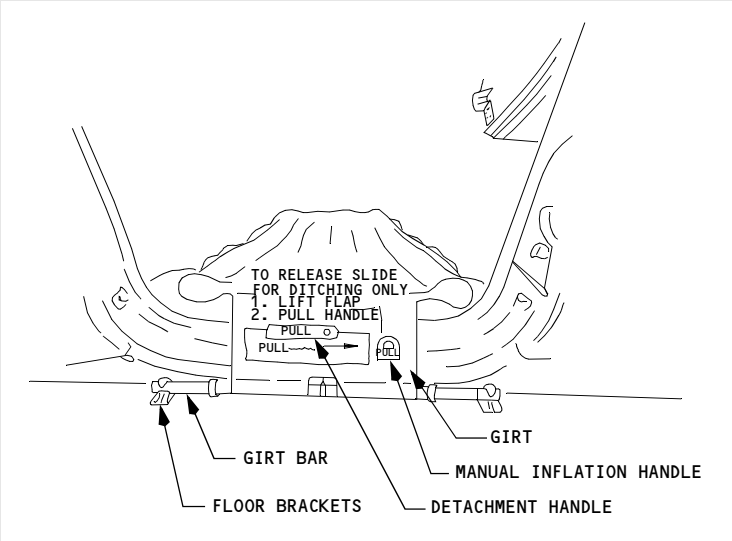

Copyright © The Boeing Company. See title page for details.

Escape Straps

[Option - 737-600/700]
Escape straps are installed above each emergency exit door frame. The escape doors must be opened to expose the straps. One end of the strap is attached to the door frame. The remainder of the strap is stowed in a tube extending into the cabin ceiling. To use, the strap is pulled free from its stowage and attached to a ring on the top surface of the wing. The escape strap can be used as a hand hold in a ditching emergency for passengers to walk out on the wing and step into a life raft.

[Option - 737-800/900]
Escape straps are installed above each aft emergency exit door frame. The escape doors must be opened to expose the straps. One end of the strap is attached to the door frame. The remainder of the strap is stowed in a tube extending into the cabin ceiling. To use, the strap is pulled free from its stowage and attached to a ring on the top surface of the wing. The escape strap can be used as a hand hold in a ditching emergency for passengers to walk out on the wing and step into a life raft.

Copyright © The Boeing Company. See title page for details.

[Option - 737-600/700]

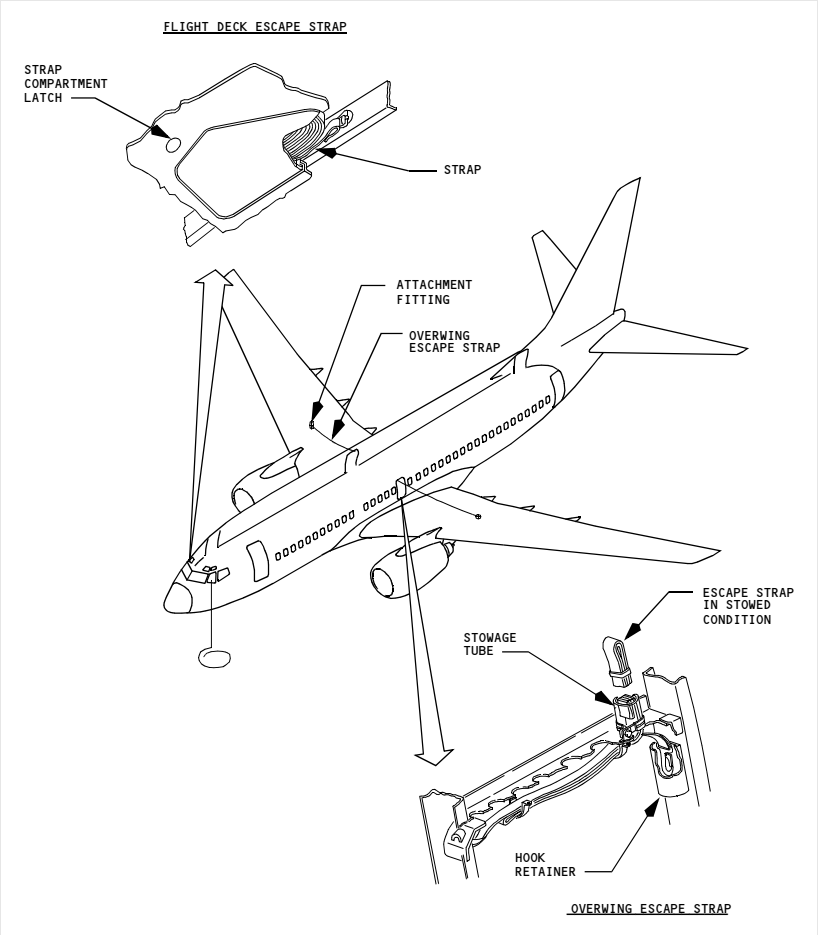

Copyright © The Boeing Company. See title page for details.

[Option - 737-800/900]

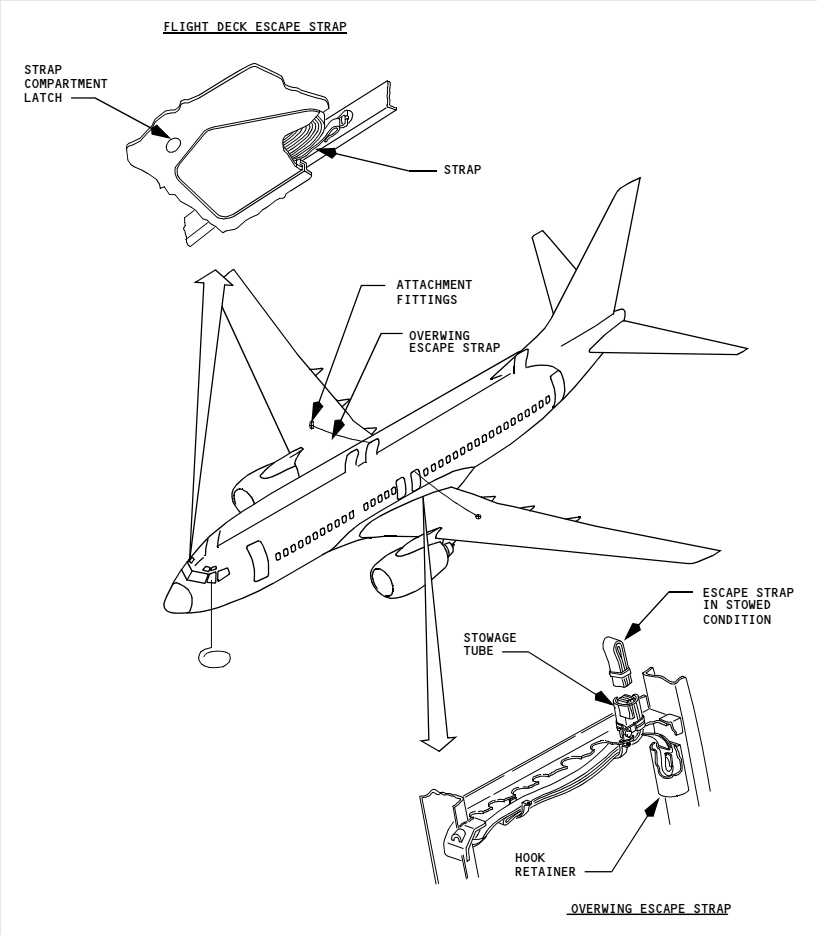

Copyright © The Boeing Company. See title page for details.

Emergency Exit Doors

[Option - 737-600/700]
Two Type III emergency exits are located in the passenger cabin over the wings. These are canopy-type doors and are held in place by mechanical locks and airplane cabin pressure.

[Option - 737-800/900]
Four Type III emergency exits are located in the passenger cabin over the wings. These are canopy-type doors and are held in place by mechanical locks and airplane cabin pressure.

The doors can be opened from inside or outside of the airplane by a spring–loaded handle at the top of the door. The 28 Volt DC flight lock system is designed to ensure that the flight lock will automatically lock during takeoff, in-flight, and landing and unlock on the ground to allow for opening of the door in emergency situations. Commands for the flight lock to lock and unlock are dependent upon engine speed, thrust lever position, air/ground mode status, and the open/closed status of the doors.

The overwing emergency exits lock when:

- three of the four Entry/Service doors are closed and
- either engine is running and
- the airplane air/ground logic indicates that the airplane is in the air or both thrust levers are advanced.

The overwing emergency exits unlock when any one of the above conditions is not met or DC power is lost.

The LEFT OVERWING and/or RIGHT OVERWING warning lights, DOORS annunciator, and MASTER CAUTION light illuminate when an emergency exit door is not fully closed and locked or when the flight lock is not engaged, either during the takeoff roll or in-flight.

If a flight lock has failed locked or a fault is detected the PSEU light, the OVERHEAD annunciator, and the MASTER CAUTION lights illuminate.These indications are inhibited from takeoff until 30 seconds after the airplane is in the ground mode. When the doors are latched and locked and the flight lock is operating properly none of these lights will illuminate.

Copyright © The Boeing Company. See title page for details.

[Option - 737-600/700]

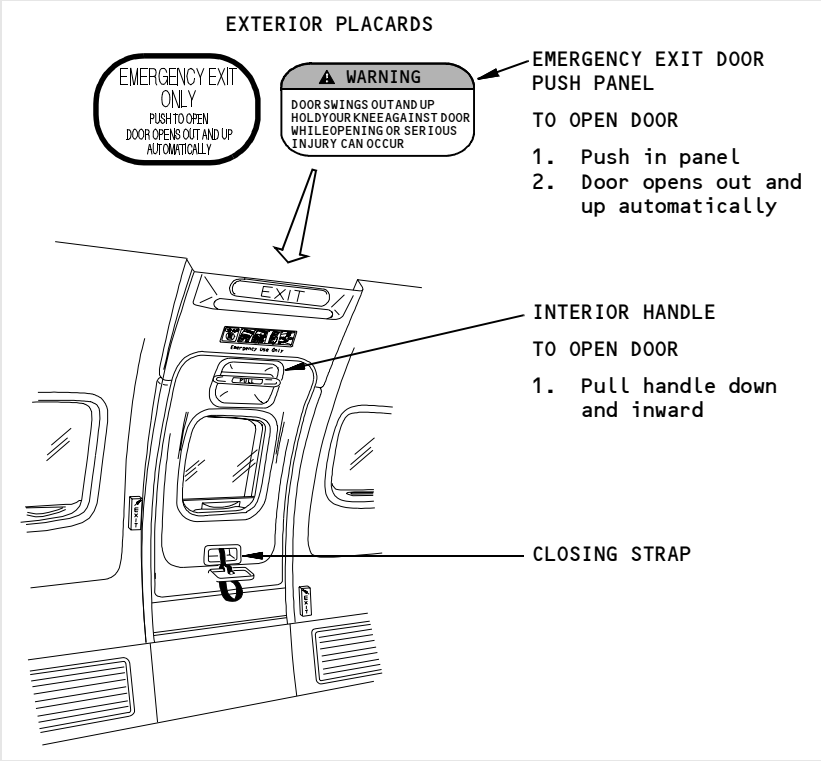

Copyright © The Boeing Company. See title page for details.

[Option - 737-800/900]

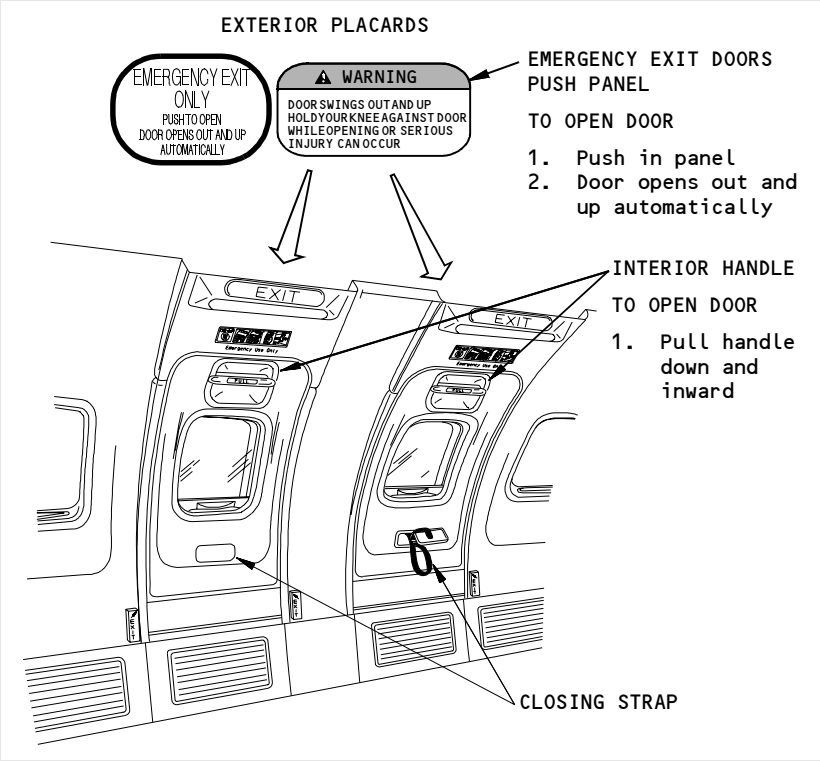

Copyright © The Boeing Company. See title page for details.

Pilot Seat Adjustment

Adjust the seat position with the appropriate controls to obtain the optimum eye reference position. Use the handhold above the forward window to assist. The following sight references are used:

- Sight along the upper surface of the glareshield with a small amount of the airplane nose structure visible (A)
- Sight over the control column (in the neutral position) until the bottom edge of the outboard display unit is visible (B).

Pilot Seat Adjustment

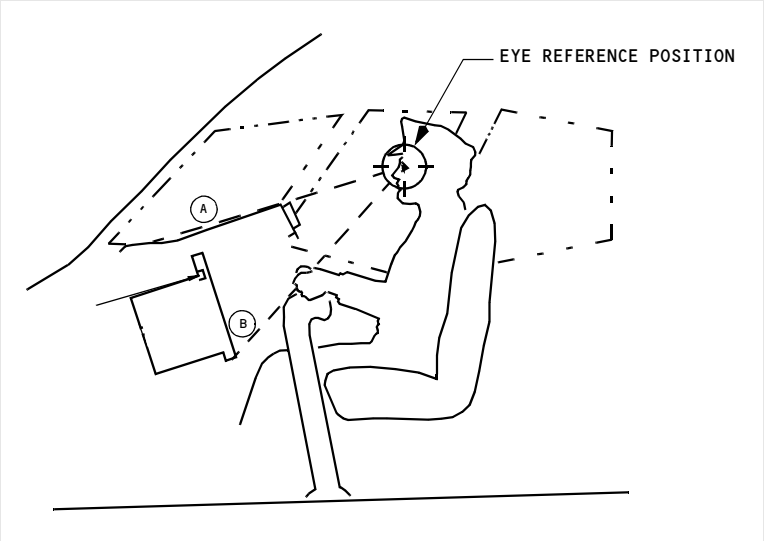

Galleys

Galleys are located in the passenger cabin to provide convenient and rapid service to the passengers. Generally, they are installed in the cabin adjacent to the forward and aft galley service doors.

In general the equipment of the galley unit consists of the following main items:

- high speed ovens
- hot beverage containers
- hot cup receptacles
- refrigeration and main storage compartments.

Copyright © The Boeing Company. See title page for details.

Electrical control panel switches and circuit breakers to operate the above equipment are conveniently located within the galley work area. Storage space, miscellaneous drawers and waste containers are also integrated in the galley units.

Electrical Power

Electricity for the galleys is 115V AC supplied from the airplane transfer buses and controlled by a switch on the overhead panel. Circuit breakers are located in the lower E/E bay as part of the power distribution panels.

Water Service

Water is supplied to the galleys from the airplane pressurized water system and, in an emergency, may be shut off at the galley.

Water System

The potable airplane water system is supplied from a single tank located behind the aft cargo compartment. Fresh water is supplied to the galleys and lavatory sinks.

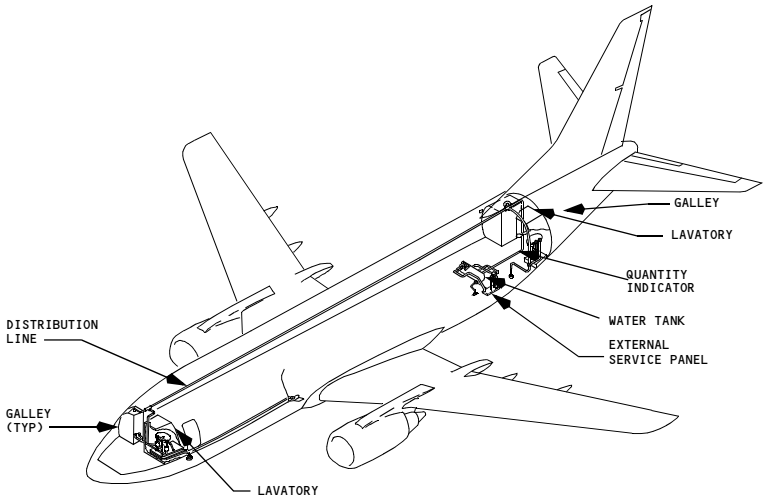

WATER SYSTEM

Copyright © The Boeing Company. See title page for details.

Quantity Indication and System Operation

A quantity indicator is located on the attendant panel. The system is pressurized by engine bleed air or by the water system air compressor. Shutoff valves are located on each galley and below the sink in each lavatory. The drain position of this valve is used to drain all water overboard. Normally, the drain shutoff valves are ON.

Hot Water

Hot and cold water is available in all lavatories. The water heater is located below the lavatory sink. When emptied, it heats a new water charge in four minutes. An amber light is ON when the heater is operating normally. The heater has an overheat switch which turns off the heating element if an excess temperature is reached. The heater may be turned off at any time by using a manual switch on the heater. Cold water is supplied at the galleys.

Servicing

The system is serviced from an exterior panel located on the bottom right side of the aft fuselage. Pressure filling is required. Waste water from the galleys and lavatory wash basins is drained overboard through two heated drain masts. The drain masts are on the bottom of the fuselage; one forward and one aft.

Forward Airstair

[Option - Airstairs]

The forward airstair provides the capability of boarding passengers without relying on the availability of airport ground equipment. The airstair is electrically operated and may be controlled from either inside or outside the airplane. The airstair is stowed inside a compartment just below the forward entry door. The compartment has a pressure door that automatically opens before the airstair can operate. For passenger safety, upper handrails are attached to support brackets inside the entry door after the airstair is fully extended.

Copyright © The Boeing Company. See title page for details.

Interior Control

The interior control panel is located on the forward attendant panel. A white STAIR OPER light on the panel illuminates when the airstair is in transit. The airstair tread lights on the airstair steps are controlled by a single three–position airstair Tread LIGHTS switch. With the switch in the AUTO position, the tread lights illuminate when the airstair makes contact with the ground and extinguish when the airstair retracts. The interior control panel has two modes of operation, normal and standby. The standby system provides an alternate means of electrical control in the event the normal mode of operation is not available. Normal operation requires 115V AC while standby operation requires the battery switch to be ON. Both operating modes require the forward entry door to be partially open. During normal operation the momentary extend or retract switches are depressed to operate the stairs. To operate in the standby mode, the momentary standby switch must be depressed while the retract or extend switches are also depressed.

Exterior Control

The exterior control is located to the right and below the airstair compartment. Operating instructions are located near the switches. When operating the airstair with the exterior control, the forward entry door need not be open. The exterior control switch by–passes the door–open requirement. A two–position switch, labeled NORMAL and STANDBY, is located in the exterior control recess. The switch is spring–loaded to NORMAL. Holding the NORMAL/STANDBY Switch to STANDBY provides DC power from the battery bus for airstair operation. The BAT switch on the flight deck does not need to be ON when operating the airstair on standby from the exterior control panel. The airstair control switch can be moved to extend or retract the airstair. The use of the standby system from either the interior or exterior control by–passes the handrail and lower ladder safety circuits. Caution must be exercised when using the standby system. If the upper handrail extensions are not properly stowed before retraction, damage to the airplane structure or damage to the airstair’s handrail may result. A white AIRSTAIR light, located on the overhead door caution annunciator panel, illuminates when the airstair pressure door is unlocked. Illumination of the AIRSTAIR light also activates the DOORS annunciator light and the MASTER CAUTION lights. The Airstair light is inoperative when DC bus 1 is not powered. The MASTER CAUTION and DOORS lights illuminate in normal or standby operation of the airstair.

Copyright © The Boeing Company. See title page for details.

Airstairs

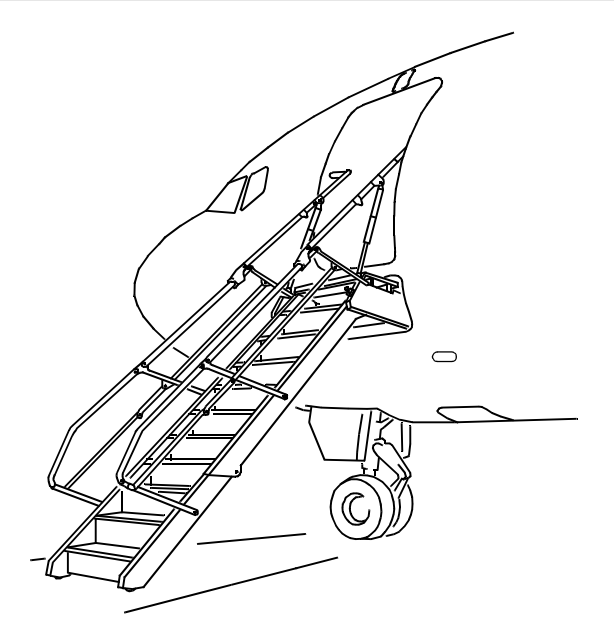

Copyright © The Boeing Company. See title page for details.

DO NOT USE FOR FLIGHT

Controls and Indicators 2.10.1

Bleed Air Controls and Indicators 2.10.1

Air Conditioning Controls and Indicators. 2.10.5

Equipment Cooling Panel 2.10.11

Cabin Altitude Panel 2.10.12

Cabin Pressurization Panel 2.10.13

Bleed Air System Description. 2.20.1

Introduction. 2.20.1

Engine Bleed System Supply 2.20.1

Engine Bleed Air Valves 2.20.1

Bleed Trip Sensors. 2.20.1

Duct Pressure Transmitters 2.20.2

Isolation Valve 2.20.2

External Air Connection 2.20.2

APU Bleed Air Valve. 2.20.2

DUAL BLEED Light. 2.20.2

Bleed Air System Schematic 2.20.3

Wing-Body Overheat 2.20.5

Wing-Body Overheat Ducts and Lights. 2.20.5

Air Conditioning System Description 2.30.1

Introduction. 2.30.1

Air Conditioning Pack 2.30.1

Airflow Control 2.30.1

Ram Air System. 2.30.2

Cooling Cycle 2.30.2

Air Mix Valves. 2.30.2

Air Conditioning Pack Schematic 2.30.3

Air Conditioning Distribution. 2.30.3

Copyright © The Boeing Company. See title page for details.

Flight Deck 2.30.4
Passenger Cabin 2.30.4
Recirculation Fan 2.30.4
Equipment Cooling 2.30.4
Forward Cargo Compartment. 2.30.5
Conditioned Air Source Connection 2.30.5
Air Conditioning Distribution Schematic 2.30.6

Air Conditioning System Description 2.31.1

Introduction 2.31.1
Air Conditioning Pack. 2.31.1
Airflow Control 2.31.1
Ram Air System 2.31.2
Cooling Cycle. 2.31.2
Pack Temperature Control 2.31.2
Air Conditioning Pack Schematic 2.31.3
Zone Temperature Control 2.31.4
Zone Temperature Control Modes 2.31.4
Unbalanced Pack Temperature Control Mode 2.31.4
Standby Pack Average Temperature. 2.31.5
Fixed Cabin Temperature 2.31.5
Air Conditioning Distribution 2.31.5
Flight Deck 2.31.5
Passenger Cabin 2.31.5
Recirculation Fan 2.31.6
Equipment Cooling 2.31.6
Forward Cargo Compartment. 2.31.6
Conditioned Air Source Connection 2.31.6
Air Conditioning Distribution Schematic 2.31.7

Pressurization System Description 2.40.1

Introduction 2.40.1
Pressure Relief Valves 2.40.1
Cabin Pressure Controller 2.40.1

Copyright © The Boeing Company. See title page for details.

Cabin Pressure Control System Schematic 2.40.2
Pressurization Outflow 2.40.2
Outflow Valve 2.40.3
Overboard Exhaust Valve 2.40.3
Pressurization Outflow Schematic. 2.40.4
Auto Mode Operation 2.40.5
High Altitude Landing. 2.40.6
Flight Path Events – Auto Mode 2.40.7
Manual Mode Operation. 2.40.8

Copyright © The Boeing Company. See title page for details.

Intentionally
Blank

Copyright © The Boeing Company. See title page for details.

Bleed Air Controls and Indicators

[737 - 600/700]

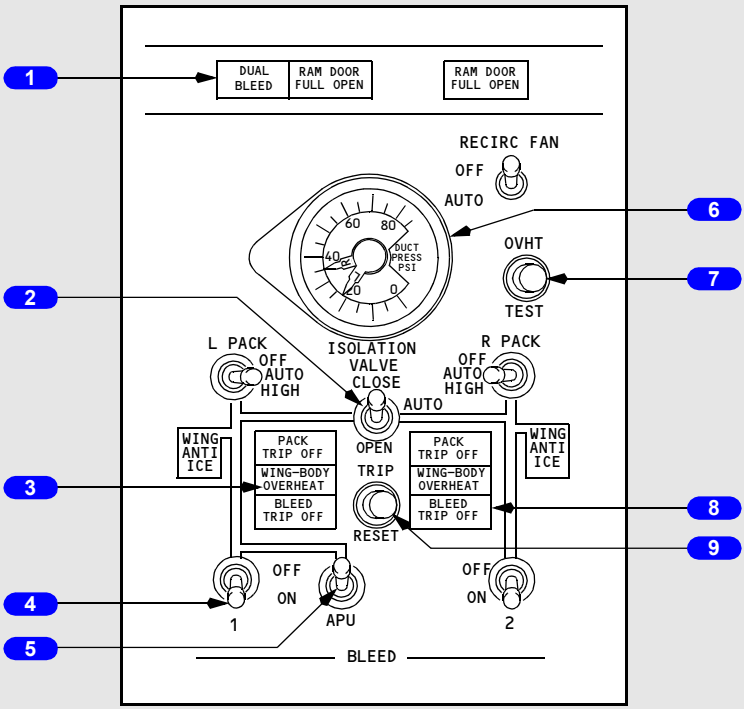

FORWARD OVERHEAD PANEL

Copyright © The Boeing Company. See title page for details.

DO NOT USE FOR FLIGHT

[737 - 800/900]

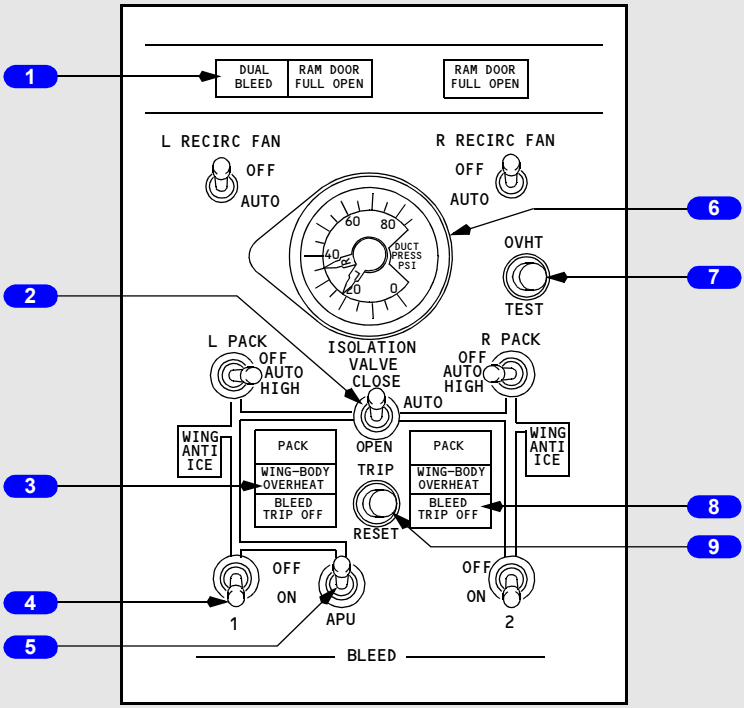

FORWARD OVERHEAD PANEL

1 DUAL BLEED Light

Illuminated (amber) – APU bleed air valve open and engine No. 1 BLEED air switch ON, or engine No. 2 BLEED air switch ON, APU bleed air valve and isolation valve open.

2 ISOLATION VALVE Switch

CLOSE – closes isolation valve.

AUTO –

- closes isolation valve if both engine BLEED air switches are ON and both air conditioning PACK switches are AUTO or HIGH
- opens isolation valve automatically if either engine BLEED air or air conditioning PACK switch positioned OFF.

OPEN – opens isolation valve.

Copyright © The Boeing Company. See title page for details.

3 WING–BODY OVERHEAT Light

Illuminated (amber) –

- left light indicates overheat from bleed air duct leak in left engine strut, left inboard wing leading edge, left air conditioning bay, keel beam or APU bleed air duct
- right light indicates overheat from bleed air duct leak in right engine strut, right inboard wing leading edge or right air conditioning bay.

4 Engine BLEED Air Switches

OFF – closes engine bleed air valve.

ON – opens engine bleed air valve when engines are operating.

5 APU BLEED Air Switch

OFF – closes APU bleed air valve.

ON – opens APU bleed air valve when APU is operating.

6 Bleed Air DUCT PRESSURE Indicator

Indicates pressure in L and R (left and right) bleed air ducts.

7 Wing–Body Overheat (OVHT) TEST Switch

Push –

- tests wing–body overheat detector circuits
- illuminates both WING–BODY OVERHEAT lights.

8 BLEED TRIP OFF Light

Illuminated (amber) – excessive engine bleed air temperature or pressure

- related engine bleed air valve closes automatically
- requires reset.

9 TRIP RESET Switch
[737 - 600/700]

Push (if fault condition is corrected) –

- resets BLEED TRIP OFF, PACK TRIP OFF and DUCT OVERHEAT lights
- lights remain illuminated until reset.

Copyright © The Boeing Company. See title page for details.

9 TRIP RESET Switch
[737 - 800/900]

Push (if fault condition is corrected) –

- resets BLEED TRIP OFF, PACK and ZONE TEMP lights
- related engine bleed valve opens, or related pack valve opens, or related air mix valve opens
- lights remain illuminated until reset.

Copyright © The Boeing Company. See title page for details.

Air Conditioning Controls and Indicators

[737 - 600/700 and Air Temperature Indicator in degrees C]]

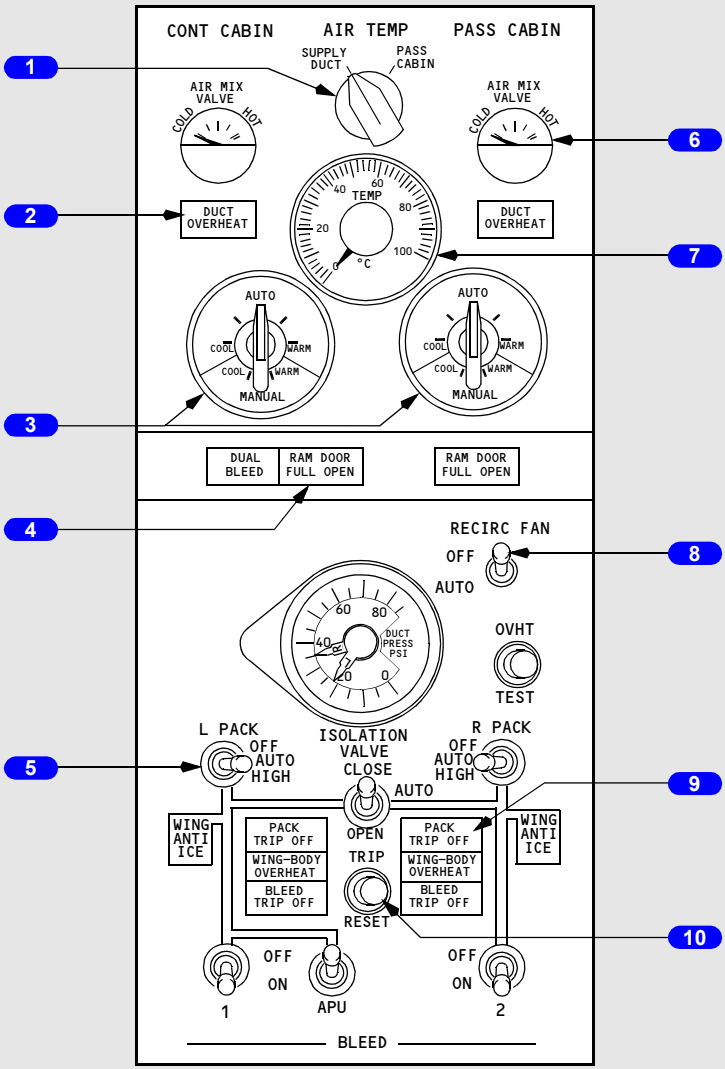

FORWARD OVERHEAD PANEL

1 AIR Temperature (TEMP) Source Selector

SUPPLY DUCT – selects main distribution supply duct sensor for TEMP indicator.

Copyright © The Boeing Company. See title page for details.

PASS CABIN – selects passenger cabin sensor for TEMP indicator.

2 DUCT OVERHEAT Light

Illuminated (amber) –

- bleed air temperature in related duct exceeds limit
- air mix valves drive full cold
- requires reset.

3 Control (CONT) CABIN and Passenger (PASS) CABIN Temperature Selector

AUTO – automatic temperature controller controls passenger cabin or flight deck temperature as selected.

MANUAL – air mix valves controlled manually. Automatic temperature controller bypassed.

4 RAM DOOR FULL OPEN Light

Illuminated (blue) – indicates ram door in full open position.

5 Air Conditioning PACK Switch

OFF – pack signalled OFF.

AUTO –

- with both packs operating, each pack regulates to low flow
- with one pack operating, operating pack regulates to high flow in flight with flaps up
- when operating one pack from APU (both engine BLEED air switches OFF), regulates to high flow.

HIGH –

- pack regulates to high flow
- provides maximum flow rate on ground with APU BLEED air switch ON.

6 AIR MIX VALVE Indicator

Indicates position of air mix valves:

- controlled automatically with related temperature selector in AUTO
- controlled manually with related temperature selector in MANUAL.

7 Air Temperature (TEMP) Indicator

Indicates temperature at location selected with AIR TEMP source selector.

Copyright © The Boeing Company. See title page for details.

8 Recirculation (RECIRC) FAN Switch

OFF - fan signalled off.

AUTO – fan signalled on except when both packs operating with either PACK switch in HIGH.

9 PACK TRIP OFF Light

Illuminated (amber) –

- indicates pack temperature has exceeded limits
- related pack valve automatically closes and mix valves drive full cold
- requires reset.

10 TRIP RESET Switch

Push (if fault condition is corrected) –

- resets BLEED TRIP OFF, PACK TRIP OFF and DUCT OVERHEAT lights
- related engine bleed air valves open, or related pack valves open, or related air mix valves open
- lights remain illuminated until reset.

Copyright © The Boeing Company. See title page for details.

[737 - 800/900 and Air Temperature Indicator in degrees F]

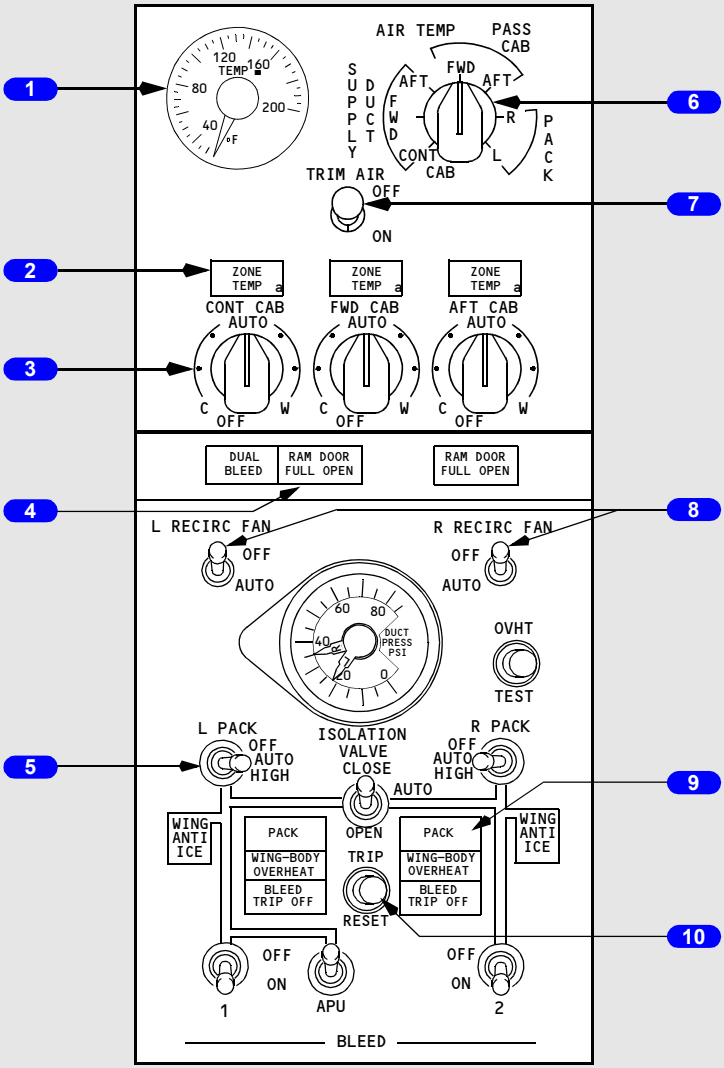

FORWARD OVERHEAD PANEL

1 Air Temperature (TEMP) Indicator

Indicates temperature at location selected with AIR TEMP source selector.

Copyright © The Boeing Company. See title page for details.

2 ZONE TEMP Lights

Illuminated (amber) –

- CONT CAB indicates a duct temperature overheat or failure of the flight deck primary and standby temperature control
- FWD CAB or AFT CAB indicates duct temperature overheat.

During Master Caution light recall:

- CONT CAB indicates failure of the flight deck primary or standby temperature control
- either FWD CAB or AFT CAB indicates failure of the associated zone temperature control
- lights will extinguish when Master Caution is reset.

3 Temperature Selector

AUTO – provides automatic temperature control for the associated zones. Rotating the control toward C (cool) or W (warm) manually sets the desired temperature.

OFF – closes the associated trim air modulating valve.

4 RAM DOOR FULL OPEN Light

Illuminated (blue) – indicates ram door in full open position.

5 Air Conditioning PACK Switch

OFF – pack signalled OFF.

AUTO –

- with both packs operating, each pack regulates to low flow
- with one pack operating, operating pack regulates to high flow in flight with flaps up
- when operating one pack from APU (both engine BLEED air switches OFF), regulates to high flow.

HIGH –

- pack regulates to high flow
- provides maximum flow rate on ground with APU BLEED air switch ON.

6 AIR Temperature (TEMP) Source Selector

SUPPLY DUCT – selects appropriate zone supply duct temperature

PASS CAB – selects forward or aft passenger cabin temperature

PACK - selects left or right pack temperatures.

Copyright © The Boeing Company. See title page for details.

7 TRIM AIR Switch

ON - trim air pressure regulating and shutoff valve signaled open.

OFF - trim air pressure regulating and shutoff valve signaled closed.

8 Recirculation (RECIRC) FAN Switches

OFF - fan signalled off.

AUTO –

- in-flight –
  - the left recirculation fan operates if both packs are operating unless either PACK switch is in HIGH
  - the right recirculation fan operates if both packs are operating unless both PACK switches are in HIGH.
- on the ground –
  - the left recirculation fan operates unless both PACK switches are in HIGH
  - the right recirculation fan operates even if both PACK switches are in HIGH.

9 PACK Light

Illuminated (amber) –

- indicates pack trip off or failure of both primary and standby pack controls
- during Master Caution recall, indicates failure of either primary or standby pack control. Extinguishes when Master Caution is reset

10 TRIP RESET Switch

Push (if fault condition is corrected) –

- resets BLEED TRIP OFF, PACK and ZONE TEMP lights
- lights remain illuminated until reset.

Copyright © The Boeing Company. See title page for details.

Equipment Cooling Panel

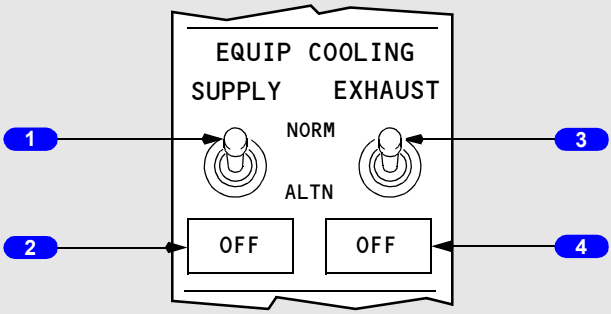

FORWARD OVERHEAD PANEL

1 Equipment (EQUIP) COOLING SUPPLY Switch

NORM – normal cooling supply fan activated.

ALTN – alternate cooling supply fan activated.

2 Equipment Cooling Supply OFF Light

Illuminated (amber) – no airflow from selected cooling supply fan.

3 Equipment (EQUIP) COOLING EXHAUST Switch

NORM – normal cooling exhaust fan activated.

ALTN – alternate cooling exhaust fan activated.

4 Equipment Cooling Exhaust OFF Light

Illuminated (amber) – no airflow from selected cooling exhaust fan.

Copyright © The Boeing Company. See title page for details.

Cabin Altitude Panel

[Option - High Altitude Landing switch]

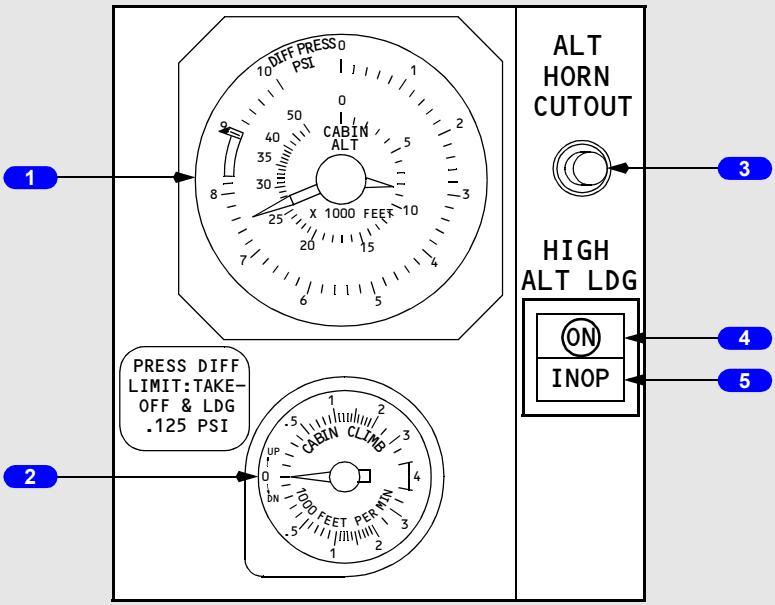

FORWARD OVERHEAD PANEL

1 CABIN Altimeter (ALT)/Differential Pressure (DIFF PRESS) Indicator

Inner Scale – indicates cabin altitude in feet.

Outer Scale – indicates differential pressure between cabin and ambient in psi.

2 CABIN Rate of CLIMB Indicator

Indicates cabin rate of climb or descent in feet per minute.

3 Altitude (ALT) HORN CUTOUT Switch

Push –

- cuts out intermittent cabin altitude warning horn
- altitude warning horn sounds when cabin reaches 10,000 feet altitude.

Copyright © The Boeing Company. See title page for details.

4 High Altitude Landing Switch
[Option - High Altitude Landing switch]

Off – (ON not visible)

- reprograms cabin pressurization from high altitude to normal operation
- extinguishes INOP light

5 High Altitude Landing INOP Light
[Option - High Altitude Landing switch]

Illuminated (amber) – indicates high altitude landing system fault.

Cabin Pressurization Panel

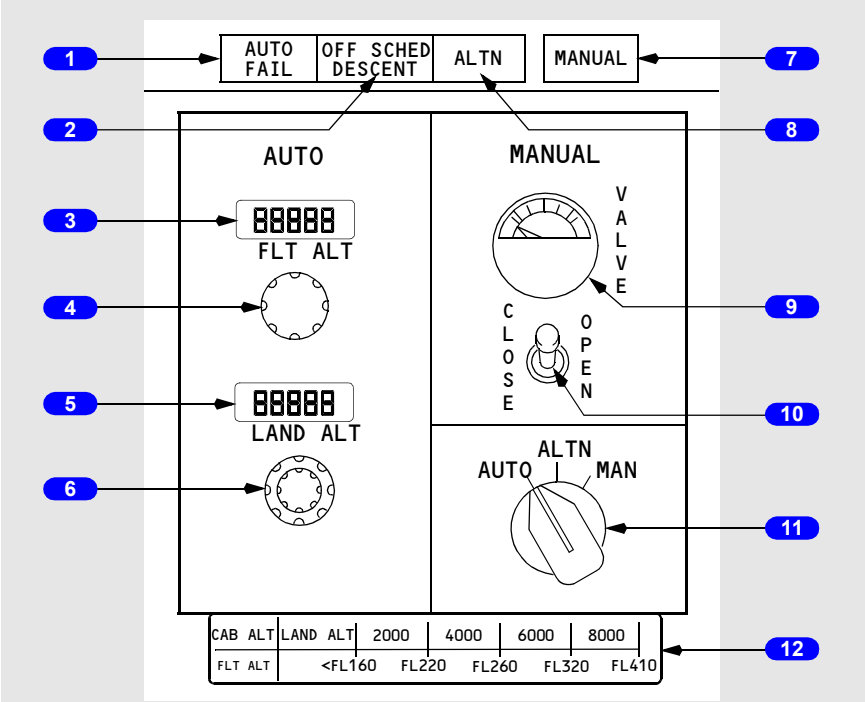

FORWARD OVERHEAD PANEL

1 AUTO FAIL Light

Illuminated (amber) – automatic pressurization system failure detected:

- indicates a single controller failure when ALTN light is also illuminated
- indicates a dual controller failure when illuminated alone.

Copyright © The Boeing Company. See title page for details.

2 OFF Schedule (SCHED) DESCENT Light

Illuminated (amber) – airplane descended before reaching the planned cruise altitude set in the FLT ALT indicator.

3 Flight Altitude (FLT ALT) Indicator

- indicates selected cruise altitude
- set before takeoff.

4 Flight Altitude Selector

Rotate – set planned cruise altitude.(-1,000 ft. to 42,000 ft. in 500 ft. increments).

5 Landing Altitude (LAND ALT) Indicator

- indicates altitude of intended landing field
- set before takeoff.

6 Landing Altitude Selector

Rotate – select planned landing field altitude. (-1,000 ft. to 14,000 ft. in 50 ft. increments).

7 MANUAL Light

Illuminated (green) – pressurization system operating in the manual mode.

8 Alternate (ALTN) Light

Illuminated (green) – pressurization system operating in the alternate automatic mode:

- Illumination of both ALTN and AUTO FAIL lights indicates a single controller failure and automatic transfer to ALTN mode
- pressurization mode selector in ALTN position.

9 Outflow VALVE Position Indicator

- indicates position of outflow valve
- operates in all modes.

10 Outflow Valve Switch (spring–loaded to center)

CLOSE – closes outflow valve electrically with pressurization mode selector in MAN position.

OPEN – opens outflow valve electrically with pressurization mode selector in MAN position.

Copyright © The Boeing Company. See title page for details.

11 Pressurization Mode Selector

AUTO – pressurization system controlled automatically.

ALTN – pressurization system controlled automatically using ALTN controller.

MAN –

- pressurization system controlled manually by outflow valve switch
- both auto controllers bypassed.

12 Cabin /Flight Altitude (CAB ALT)(FLT ALT) Placard

Used to determine setting for cabin altitude when operating in manual mode.

Copyright © The Boeing Company. See title page for details.

Intentionally
Blank

Copyright © The Boeing Company. See title page for details.

Introduction

Air for the bleed air system can be supplied by the engines, APU, or an external air cart/source. The APU or external cart supplies air to the bleed air duct prior to engine start. After engine start, air for the bleed air system is normally supplied by the engines.

The following systems rely on the bleed air system for operation:

- Air conditioning/pressurization
- Wing and engine thermal anti-icing
- Engine starting
- Hydraulic reservoirs pressurization
- Water tank pressurization

[Option - Aspirated TAT]

- Aspirated TAT probe

Switches on the air conditioning panel operate the APU and engine bleed air supply system.

Engine Bleed System Supply

Engine bleed air is obtained from the 5th and 9th stages of the compressor section. When 5th stage low pressure bleed air is insufficient for the bleed air system requirements, the high stage valve modulates open to maintain adequate bleed air pressure. During takeoff, climb, and most cruise conditions, low pressure bleed air from the 5th stage is adequate and the high stage valve remains closed.

Engine Bleed Air Valves

The engine bleed air valve acts as a pressure regulator and shutoff valve. With the engine bleed air switch ON, the valve is DC activated and pressure operated. The valve maintains proper system operating pressure and reduces bleed air outflow in response to high bleed air temperature.

Bleed Trip Sensors

Bleed trip sensors illuminate the respective BLEED TRIP OFF light when engine bleed air temperature or pressure exceeds a predetermined limit. The respective engine bleed air valve closes automatically.

Copyright © The Boeing Company. See title page for details.

DO NOT USE FOR FLIGHT

Duct Pressure Transmitters

Duct pressure transmitters provide bleed air pressure indications to the respective (L and R) pointers on the bleed air duct pressure indicator. The indicator is AC operated. Differences between L and R duct pressure on the bleed air duct pressure indicator are considered normal as long as there is sufficient air for cabin pressurization.

Isolation Valve

The isolation valve isolates the left and right sides of the bleed air duct during normal operations. The isolation valve is AC operated.

With the isolation valve switch in AUTO, both engine bleed air switches ON, and both air conditioning pack switches AUTO or HIGH, the isolation valve is closed. The isolation valve opens if either engine bleed air switch or air conditioning pack switch is positioned OFF. Isolation valve position is not affected by the APU bleed air switch.

External Air Connection

An external air cart/source provides an alternate air source for engine start or air conditioning.

APU Bleed Air Valve

The APU bleed air valve permits APU bleed air to flow to the bleed air duct. The valve closes automatically when the APU is shut down. The APU bleed air valve is DC controlled and pressure operated.

With both the APU and engine bleed air valves open, and the engines operating at idle thrust, there is a possibility of APU bleed air backpressuring the 9th stage modulating and shutoff valve. This would cause the 9th stage valve to close.

DUAL BLEED Light

The DUAL BLEED light illuminates whenever the APU bleed air valve is open and the position of the engine bleed air switches and isolation valve would permit possible backpressure of the APU. Therefore, thrust must be limited to idle with the DUAL BLEED light illuminated.

Copyright © The Boeing Company. See title page for details.

Bleed Air System Schematic

[737 - 600/700 without Aspirated TAT]

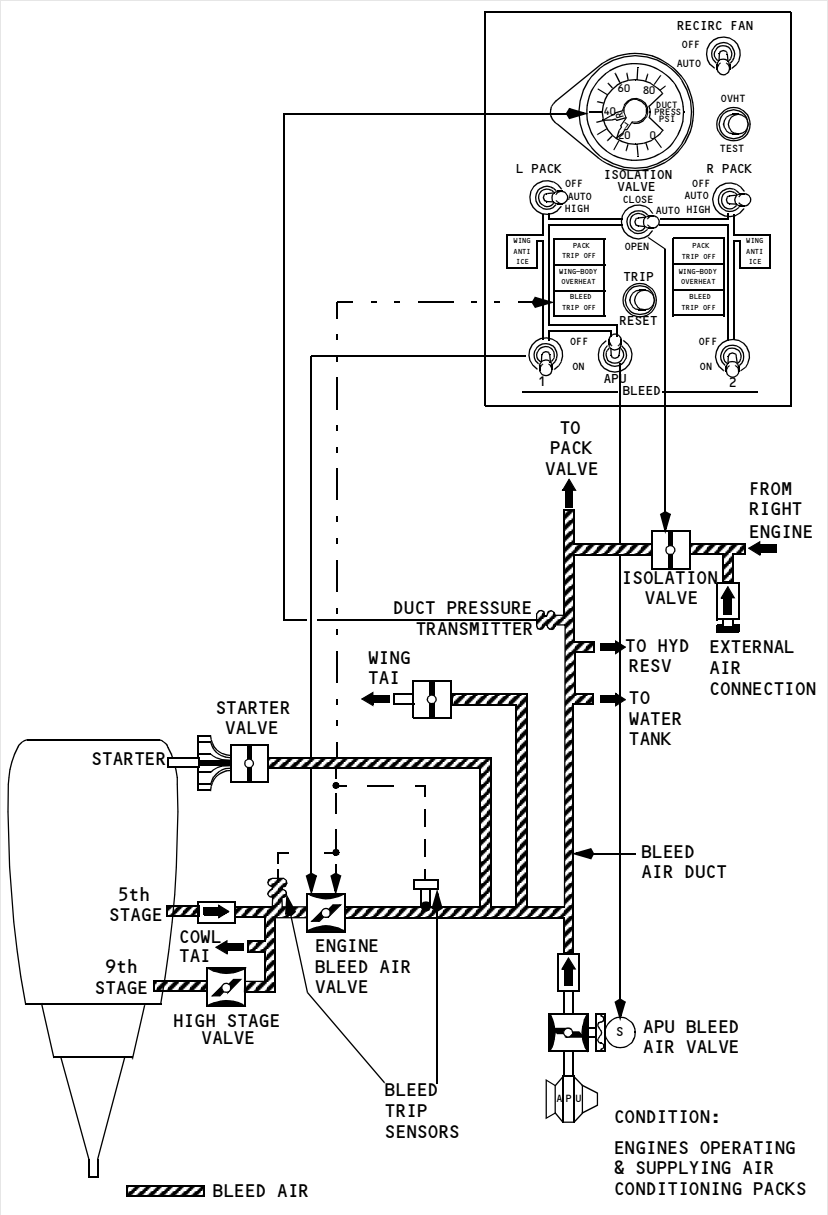

Copyright © The Boeing Company. See title page for details.

DO NOT USE FOR FLIGHT

[737 - 800/900 with Aspirated TAT]

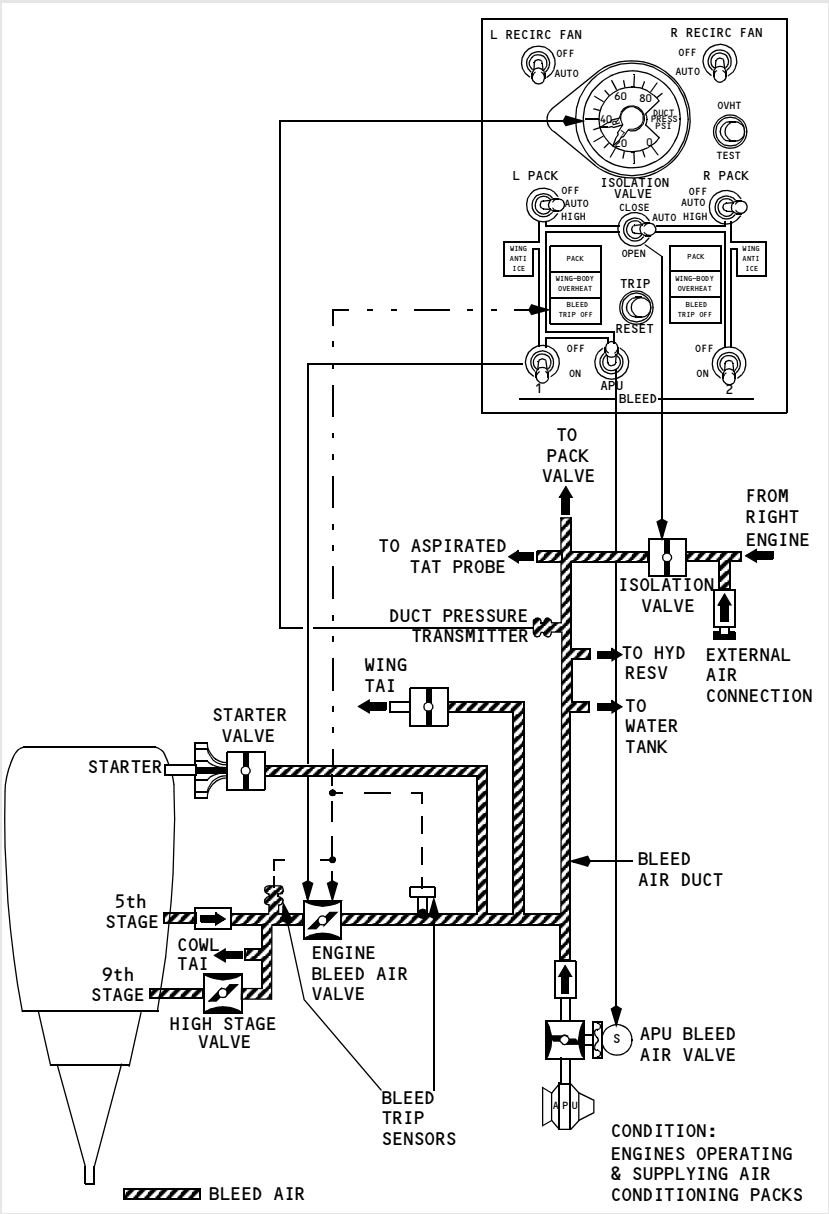

Copyright © The Boeing Company. See title page for details.

Wing-Body Overheat

A wing-body overheat condition is caused by a bleed air duct leak. It is sensed by the overheat sensors located as shown.

Wing-Body Overheat Ducts and Lights

[737 - 600/700]

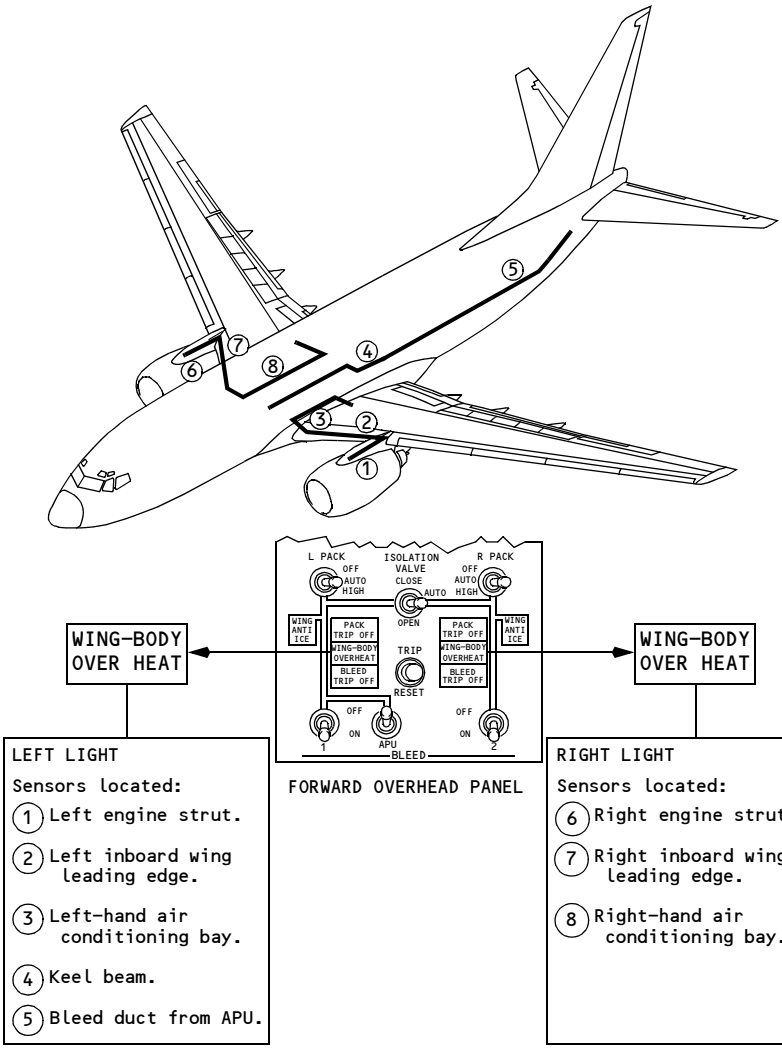

Copyright © The Boeing Company. See title page for details.

DO NOT USE FOR FLIGHT

[737 - 800/900]

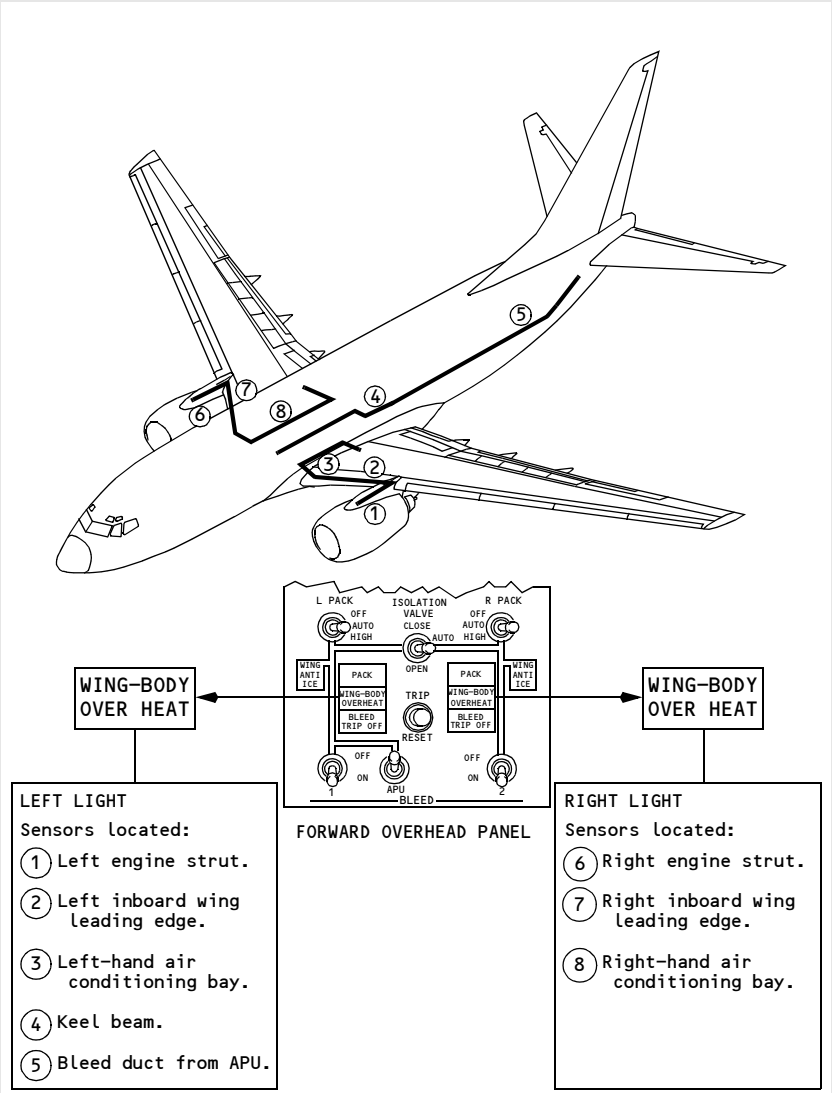

Copyright © The Boeing Company. See title page for details.

[737-600/700]

Introduction

Conditioned air for the cabin comes from either the airplane air conditioning system or a preconditioned ground source. Air from the preconditioned ground source enters the air conditioning system through the mix manifold.

The air conditioning system provides temperature controlled air by processing bleed air from the engines, APU, or a ground air source in air conditioning packs. Conditioned air from the left pack, upstream of the mix manifold, flows directly to the flight deck. Excess air from the left pack, air from the right pack, and air from the recirculation system is combined in the mix manifold. The mixed air is then distributed through the left and right sidewall risers to the passenger cabin.

Air Conditioning Pack

The flow of bleed air from the main bleed air duct through each air conditioning pack is controlled by the respective pack valve. Normally the left pack uses bleed air from engine No. 1 and the right pack uses bleed air from engine No. 2. A single pack is capable of maintaining pressurization and acceptable temperatures throughout the airplane up to the maximum certified ceiling.

The APU is capable of supplying bleed air for two packs on the ground, or one pack in flight. Most external air carts are capable of supplying adequate bleed air for two pack operation. Do not operate more than one pack from one engine at any time.

Airflow Control

With both air conditioning pack switches in AUTO and both packs operating, the packs provide “normal air flow”. However, with one pack not operating, the other pack automatically switches to “high air flow” in order to maintain the necessary ventilation rate. This automatic switching is inhibited when the airplane is on the ground, or inflight with the flaps extended, to insure adequate engine power for single engine operation. Automatic switching to “high air flow” occurs if both engine bleed air switches are OFF and the APU bleed air switch is ON, regardless of flap position, air/ground status or number of packs operating.

With the air conditioning pack switch in HIGH, the pack provides “high air flow”. Additionally, an “APU high air flow” rate is available when the airplane is on the ground, the APU bleed air switch is ON and either or both pack switches are positioned to HIGH. This mode is designed to provide the maximum airflow when the APU is the only source of bleed air.

Copyright © The Boeing Company. See title page for details.

Ram Air System

The ram air system provides cooling air for the heat exchangers. Operation of the system is automatically controlled by the packs through operation of ram air inlet doors.

On the ground, or during slow flight with the flaps not fully retracted, the ram air inlet doors move to the full open position for maximum cooling. In normal cruise, the doors modulate between open and closed. A RAM DOOR FULL OPEN light illuminates whenever a ram door is fully open.

Deflector doors are installed forward of the ram air inlet doors to prevent slush ingestion prior to liftoff and after touchdown. Deflector doors extend when activated electrically by the air–ground safety sensor.

Cooling Cycle

The flow through the cooling cycle starts with bleed air passing through a heat exchanger for cooling. The air then flows to an air cycle machine for refrigeration and to a water separator which removes moisture. The processed cold air is then combined with hot air. The conditioned air flows into the mix manifold and distribution system.

Overheat protection is provided by temperature sensors located in the cooling cycle. An overheat condition causes the pack valve to close and the PACK TRIP OFF light to illuminate.

Air Mix Valves

The two air mix valves for each pack control hot and cold air according to the setting of the CONT CABIN or PASS CABIN temperature selector. Air that flows through the cold air mix valve is processed through a cooling cycle and then combined with hot air flowing from the hot air mix valve.

In the automatic temperature mode, the air mix valves are operated by the automatic temperature controller. The automatic temperature controller uses inputs from the respective temperature selector and cabin temperature sensor. The automatic temperature controller is bypassed when the temperature selector is positioned to MANUAL.

Anytime the pack valve closes, the air mix valves are driven to the full cold position automatically. This aids startup of the cooling cycle and prevents nuisance hot air trips when the pack is turned on.

Copyright © The Boeing Company. See title page for details.

Air Conditioning Pack Schematic

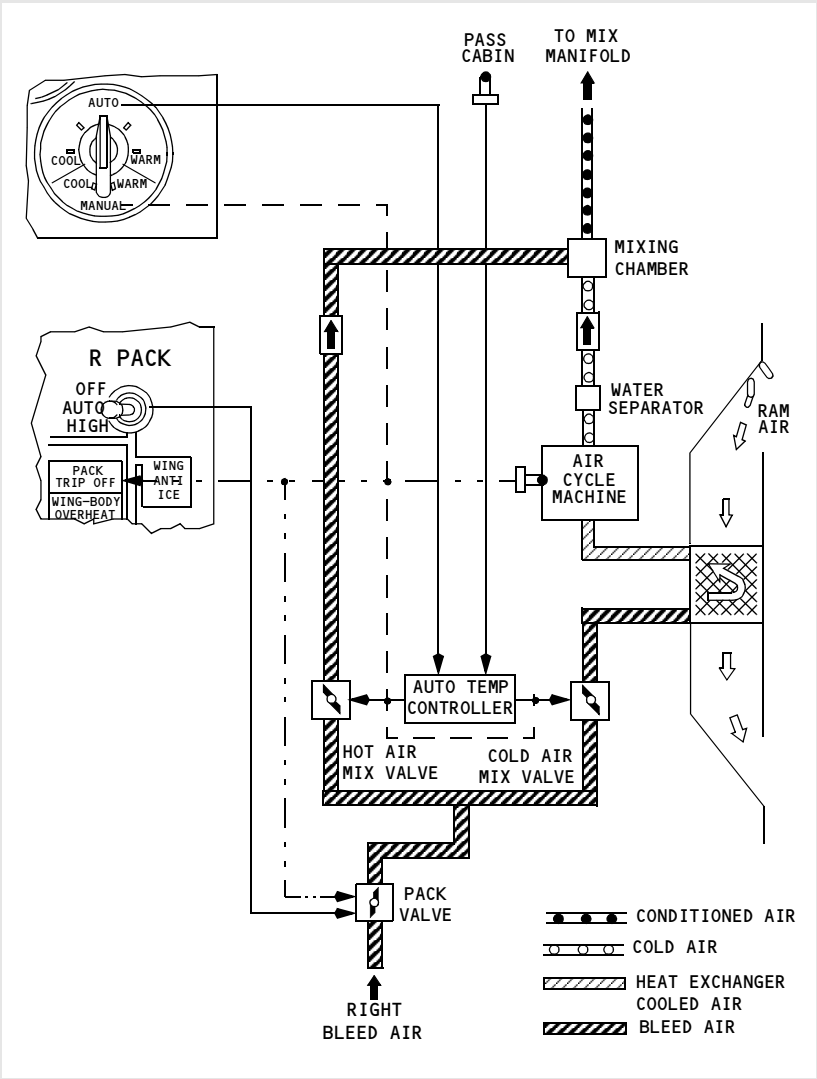

Air Conditioning Distribution

Conditioned air is collected in the mix manifold. The temperature of the air is directly related to the setting of the CONT CABIN and PASS CABIN temperature selectors.

Copyright © The Boeing Company. See title page for details.

Overheat detection is provided by temperature sensors located downstream of the packs. An overheat condition causes the appropriate mix valves to drive full cold and the DUCT OVERHEAT light to illuminate. A temperature higher than the duct overheat causes the appropriate pack valve to close and the PACK TRIP OFF light to illuminate.

Flight Deck

Since the flight deck requires only a fraction of the air supply provided by the left pack, most of the left pack air output is mixed with the right pack supply and routed to the passenger cabin.

Conditioned air for the flight deck branches into several risers which end at the floor, ceiling, and foot level outlets. Air diffusers on the floor under each seat deliver continuous air flow as long as the manifold is pressurized.

Overhead diffusers are located on the flight deck ceiling, above and aft of the No. 3 windows. Each of these outlets can be opened or closed as desired by turning a slotted adjusting screw.

There is also a dual purpose valve behind the rudder pedals of each pilot. These valves provide air for warming the pilots' feet and for defogging the inside of the No. 1 windshields. Each valve is controlled by knobs located on the Captain's and First Officer's panel, respectively.

Passenger Cabin

The passenger cabin air supply distribution system consists of the mix manifold, sidewall risers, and an overhead distribution duct.

Sidewall risers go up the right and left wall of the passenger cabin to supply air to the overhead distribution duct. The overhead distribution duct routes conditioned air to the passenger cabin. It extends from the forward to the aft end of the ceiling along the airplane centerline and also supplies the sidewall diffusers.

Recirculation Fan

The recirculation fan system reduces the air conditioning system pack load and the engine bleed air demand. Air from the passenger cabin and electrical equipment bay is drawn to the forward cargo bay where it is filtered and recirculated to the mix manifold. The fan is driven by an AC motor. The fan operates with the recirc fan switch in AUTO except with both packs on and one or both in HIGH.

Equipment Cooling

The equipment cooling system cools electronic equipment in the flight deck and the E & E bay.

Copyright © The Boeing Company. See title page for details.

The equipment cooling system consists of a supply duct and an exhaust duct. Each duct has a normal fan and an alternate fan. The supply duct supplies cool air to the flight deck displays and electronic equipment in the E & E bay. The exhaust duct collects and discards warm air from the flight deck displays, the overhead and aft electronic panels, circuit breaker panels in the flight deck, and electronic equipment in the E & E bay.

Loss of airflow due to failure of an equipment cooling fan results in illumination of the related equipment cooling OFF light. Selecting the alternate fan should restore airflow and extinguish the OFF light within approximately 5 seconds.

If an overtemperature occurs on the ground, alerting is provided through the crew call horn in the nose wheel well.

Forward Cargo Compartment

The recirculation fan system circulates air from the passenger cabin around the lining of the forward cargo compartment. When the overboard exhaust valve is closed, exhaust air from the equipment cooling system is also diffused to the lining of the forward cargo compartment for additional inflight heating.

Conditioned Air Source Connection

A ground air conditioning source may be connected to the mix manifold to distribute preconditioned air throughout the airplane.

Copyright © The Boeing Company. See title page for details.

DO NOT USE FOR FLIGHT

Air Conditioning Distribution Schematic

[Option - Air Temperature Indicator in degrees C]

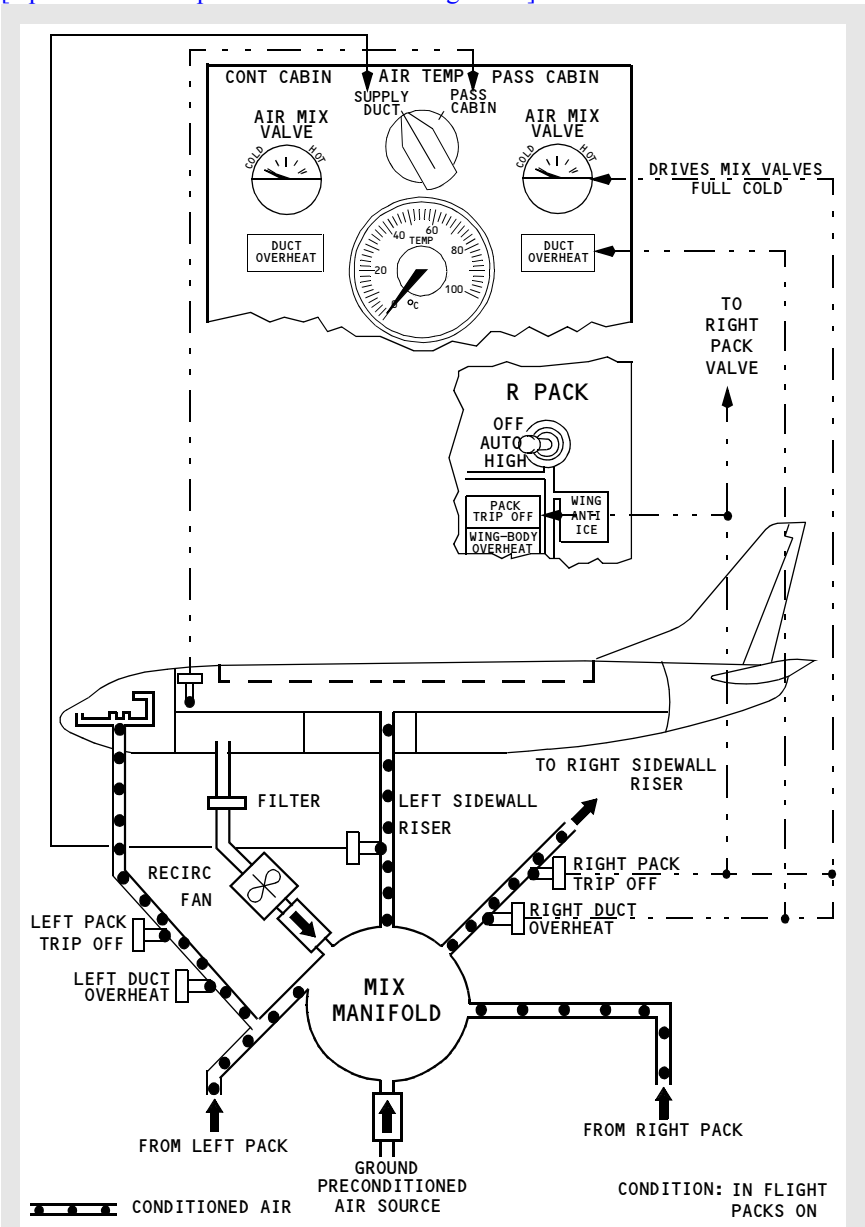

Copyright © The Boeing Company. See title page for details.

[737-800/900]

Introduction

Conditioned air for the cabin comes from either the airplane air conditioning system or a preconditioned ground source. Air from the preconditioned ground source enters the air conditioning system through the mix manifold.

The air conditioning system provides temperature controlled air by processing bleed air from the engines, APU, or a ground air source in air conditioning packs. Conditioned air from the left pack, upstream of the mix manifold, flows directly to the flight deck. Excess air from the left pack, air from the right pack, and air from the recirculation system is combined in the mix manifold. The mixed air is then distributed through the left and right sidewall risers to the passenger cabin.

Air Conditioning Pack

The flow of bleed air from the main bleed air duct through each air conditioning pack is controlled by the respective pack valve. Normally, the left pack uses bleed air from engine No. 1 and the right pack uses bleed air from engine No. 2. A single pack is capable of maintaining pressurization and acceptable temperatures throughout the airplane up to the maximum certified ceiling.

The APU is capable of supplying bleed air for two packs on the ground, or one pack in flight. Most external air carts are capable of supplying adequate bleed air for two pack operation. Do not operate more than one pack from one engine at any time.

Airflow Control

With both air conditioning pack switches in AUTO and both packs operating, the packs provide “normal air flow”. However, with one pack not operating, the other pack automatically switches to “high air flow” in order to maintain the necessary ventilation rate. This automatic switching is inhibited when the airplane is on the ground, or inflight with the flaps extended, to insure adequate engine power for single engine operation. Automatic switching to “high air flow” occurs if both engine bleed air switches are OFF and the APU bleed air switch is ON, regardless of flap position, air/ground status or number of packs operating.

With the air conditioning pack switch in HIGH, the pack provides “high air flow”. Additionally, an “APU high air flow” rate is available when the airplane is on the ground, the APU bleed air switch is ON and either or both pack switches are positioned to HIGH. This mode is designed to provide the maximum airflow when the APU is the only source of bleed air.

Copyright © The Boeing Company. See title page for details.

Ram Air System

The ram air system provides cooling air for the heat exchangers. Operation of the system is automatically controlled by the packs through operation of ram air inlet doors.

On the ground, or during slow flight with the flaps not fully retracted, the ram air inlet doors move to the full open position for maximum cooling. In normal cruise, the doors modulate between open and closed. A RAM DOOR FULL OPEN light illuminates whenever a ram door is fully open.

Deflector doors are installed forward of the ram air inlet doors to prevent slush ingestion prior to liftoff and after touchdown. Deflector doors extend when activated electrically by the air–ground safety sensor.

Cooling Cycle

Flow through the cooling cycle starts with bleed air passing through a heat exchanger for cooling. The air then flows to an air cycle machine for refrigeration. The processed cold air is then combined with hot air which has bypassed the air cycle machine, then through a high pressure water separator which removes moisture. This conditioned air then flows into the mix manifold and distribution system.

Overheat protection is provided by temperature sensors located in the cooling cycle. An overheat condition causes the pack valve to close and the PACK light to illuminate.

Pack Temperature Control

Electronic controllers command the pack temperature control valve toward open or closed to satisfy pack discharge requirements.

If a primary pack control fails, the affected pack is controlled by the standby pack control in the opposite controller. A primary or standby pack control failure causes the PACK, MASTER CAUTION and AIR COND System Annunciator lights to illuminate during recall.

If both the primary and the standby pack controls fail for the same pack, the PACK, MASTER CAUTION, and AIR COND System Annunciator lights illuminate. The pack will continue to operate without control unless excessive temperatures cause the pack to trip off.

Copyright © The Boeing Company. See title page for details.

Air Conditioning Pack Schematic

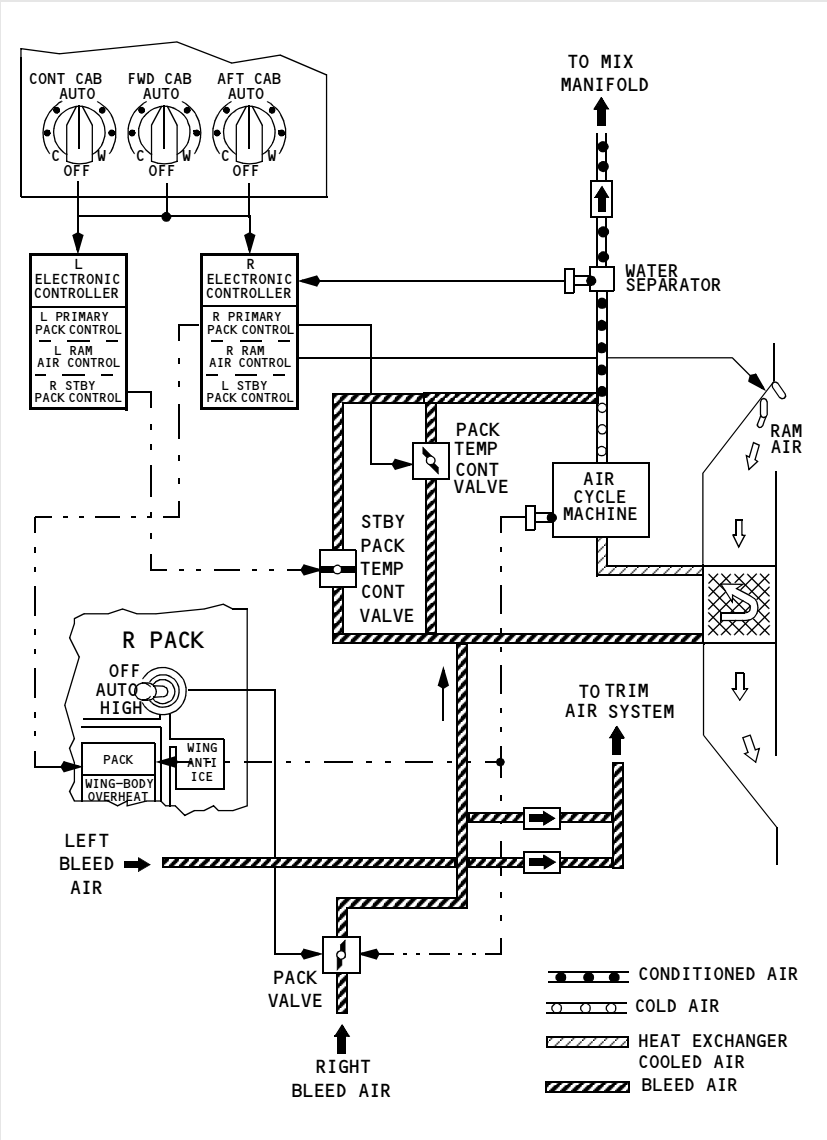

Copyright © The Boeing Company. See title page for details.

Zone Temperature Control

There are three zones: flight deck, forward cabin and aft cabin. Desired zone temperature is set by adjusting the individual Temperature Selectors. The selector range is approximately 65°F (18°C) to 85°F (30°C).

The packs produce an air temperature that satisfies the zone which requires the most cooling. Zone temperature is controlled by introducing the proper amount of trim air to the zone supply ducts. The quantity of trim air is regulated by individual trim air modulating valves.

During single pack operation with the TRIM AIR selected ON, zone temperature is controlled the same as during two pack operation. During single pack operation with the TRIM AIR selected OFF, the pack attempts to produce an air temperature to satisfy the average temperature demands of all three zones.

If air in a zone supply duct overheats, the associated amber ZONE TEMP light illuminates, and the associated trim air modulating valve closes. The trim air modulating valve may be reopened after the duct has cooled by pushing the TRIP RESET Switch.

Zone Temperature Control Modes

The left electronic controller controls the aft cabin zone and provides backup control for the flight deck. The right controller controls the forward cabin zone and provides primary control for the flight deck.

Failure of the primary flight deck temperature control will cause an automatic switch to the back up control and will illuminate the CONT CAB amber ZONE TEMP light upon Master Caution Recall. Failure of both the primary and standby controls will illuminate the lights automatically.

Failure of the forward or aft cabin temperature control will cause the associated trim air modulating valve to close. The Temperature Selectors operate normally, but the Temperature Selector settings of the two passenger cabin zones will be averaged. The amber ZONE TEMP light will illuminate upon Master Caution Recall to indicate failure of the associated zone control.

Unbalanced Pack Temperature Control Mode

Any failure affecting the supply of trim air will cause the temperature control system to control both packs independently. If flight deck trim air is lost, the left pack will provide conditioned air to the flight deck at the selected temperature and the right pack will satisfy the demand of the passenger zone which requires the most cooling. If a passenger cabin zone trim air, or all trim air is lost, the forward and aft zone temperature demands will be averaged for control of the right pack.

If any individual zone is switched OFF, the Temperature Selector setting will be ignored by the temperature control system.

Copyright © The Boeing Company. See title page for details.

Standby Pack Average Temperature

If all zone controls and primary pack controls fail, the standby pack controls command the packs to produce air temperatures which will satisfy the average temperature demand of the two cabin zones. The trim air modulating valves will close. The flight deck zone Temperature Selector will have no affect on the standby pack controls.

Fixed Cabin Temperature

If all Temperature Selectors are positioned OFF, the pack controls will cause the left pack to maintain a fixed temperature of 75°F (24°C) and the right pack to maintain 65°F (18°C) as measured at the pack temperature sensor.

Air Conditioning Distribution

Conditioned air is collected in the mix manifold. The temperature of the air is directly related to the setting of the Temperature Selectors.

Overheat detection is provided by temperature sensors located downstream of the packs and the mix manifold. An overheat condition causes the appropriate trim air modulating valve to close and the ZONE TEMP light to illuminate.

Flight Deck

Since the flight deck requires only a fraction of the air supply provided by the left pack, most of the left pack output is routed to the mix manifold.

Conditioned air for the flight deck branches into several risers which end at the floor, ceiling and foot level outlets. Air diffusers on the floor under each seat deliver continuous air flow as long as the manifold is pressurized.

Overhead diffusers are located on the flight deck ceiling, above and aft of the No. 3 windows. Each of these outlets can be opened or closed as desired by turning a slotted adjusting screw.

There is also a dual purpose valve behind the rudder pedal of each pilot. These valves provide air for warming the pilots' feet and for defogging the inside of the No. 1 windshields. Each valve is controlled by knobs located on the Captain's and First Officer's panels.

Passenger Cabin

The passenger cabin air supply distribution system consists of the mix manifold, sidewall risers, and an overhead distribution duct.

Sidewall risers go up the right and left walls of the passenger cabin to supply air to the overhead distribution duct. The overhead distribution duct routes conditioned air to the passenger cabin. It extends from the forward to the aft end of the ceiling along the airplane centerline and also supplies the sidewall diffusers.

Copyright © The Boeing Company. See title page for details.

Recirculation Fan

The recirculation fan system reduces the air conditioning system pack load and the engine bleed air demand. Air from the passenger cabin and electrical equipment bay is drawn to the forward cargo bay where it is filtered and recirculated to the mix manifold. The fans are driven by AC motors. Each recirculation fan operates only if the respective RECIRC FAN Switch is selected to AUTO. In flight, the left recirculation fan operates if both packs are operating unless either PACK switch is in HIGH. The right recirculation fan operates in flight if both packs are operating unless both PACK switches are in HIGH. On the ground, the left recirculation fan operates unless both PACK switches are in HIGH and the right recirculation fan operates even if both PACK switches are in HIGH.

Equipment Cooling

The equipment cooling system cools electronic equipment in the flight deck and the E & E bay.

The equipment cooling system consists of a supply duct and an exhaust duct. Each duct has a normal fan and an alternate fan. The supply duct supplies cool air to the flight deck displays and electronic equipment in the E & E bay. The exhaust duct collects and discards warm air from the flight deck displays, the overhead and aft electronic panels, circuit breaker panels in the flight deck, and electronic equipment in the E & E bay.

Loss of airflow due to failure of an equipment cooling fan results in illumination of the related equipment cooling OFF light. Selecting the alternate fan should restore airflow and extinguish the OFF light within approximately 5 seconds.

If an overtemperature occurs on the ground, alerting is provided through the crew call horn in the nose wheel well.

Forward Cargo Compartment

The recirculation fan system circulates air from the passenger cabin around the lining of the forward cargo compartment. When the overboard exhaust valve is closed, exhaust air from the equipment cooling system is also diffused to the lining of the forward cargo compartment for additional inflight heating.

Conditioned Air Source Connection

A ground air conditioning source may be connected to the mix manifold to distribute preconditioned air throughout the airplane.

Copyright © The Boeing Company. See title page for details.

Air Conditioning Distribution Schematic

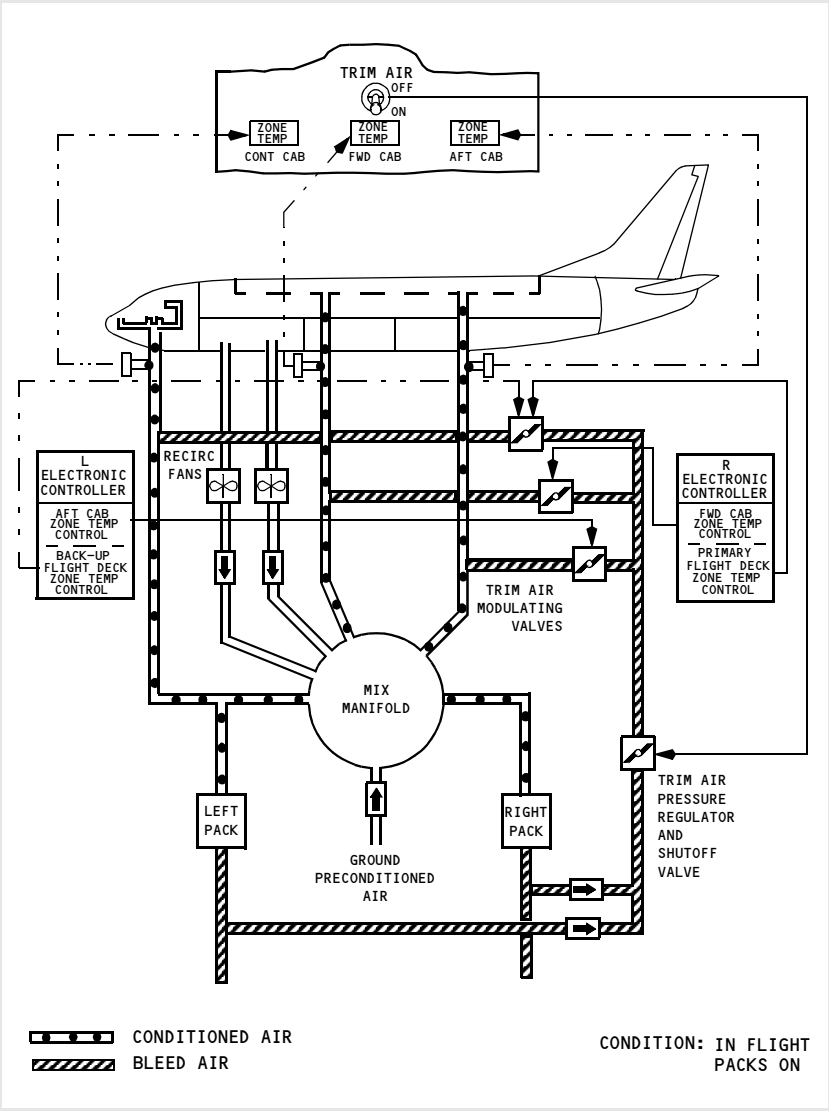

Copyright © The Boeing Company. See title page for details.

DO NOT USE FOR FLIGHT

Intentionally
Blank

Copyright © The Boeing Company. See title page for details.

DO NOT USE FOR FLIGHT

Introduction

Cabin pressurization is controlled during all phases of airplane operation by the cabin pressure control system. The cabin pressure control system includes two identical automatic controllers available by selecting AUTO or ALTN and a manual (MAN) pilot–controlled mode.

The system uses bleed air supplied to and distributed by the air conditioning system. Pressurization and ventilation is controlled by modulating the outflow valve and the overboard exhaust valve.

Pressure Relief Valves

Two pressure relief valves provide safety pressure relief by limiting the differential pressure to a maximum of 9.1 psi. A negative relief valve prevents external atmospheric pressure from exceeding internal cabin pressure.

Cabin Pressure Controller

Cabin altitude is normally rate–controlled by the cabin pressure controller up to a cabin altitude of 8,000 feet at the airplane maximum certified ceiling of 41,000 feet. The cabin pressure controller controls cabin altitude in the following modes:

- AUTO – Automatic pressurization control; the normal mode of operation. Uses DC motor.
- ALTN – Automatic pressurization control; the alternate mode of operation. Uses DC motor.
- MAN – Manual control of the system using DC motor.

The air data inertial reference units (ADIRUs) provides ambient static pressure, baro corrected altitude, non corrected altitude and calibrated airspeed to both automatic controllers. The ADIRUs receive barometric corrections from the Captain's and First Officer's BARO reference selectors.

The automatic controllers also receive throttle position from both stall management computers and signals from the air/ground sensors.

Copyright © The Boeing Company. See title page for details.

Cabin Pressure Control System Schematic

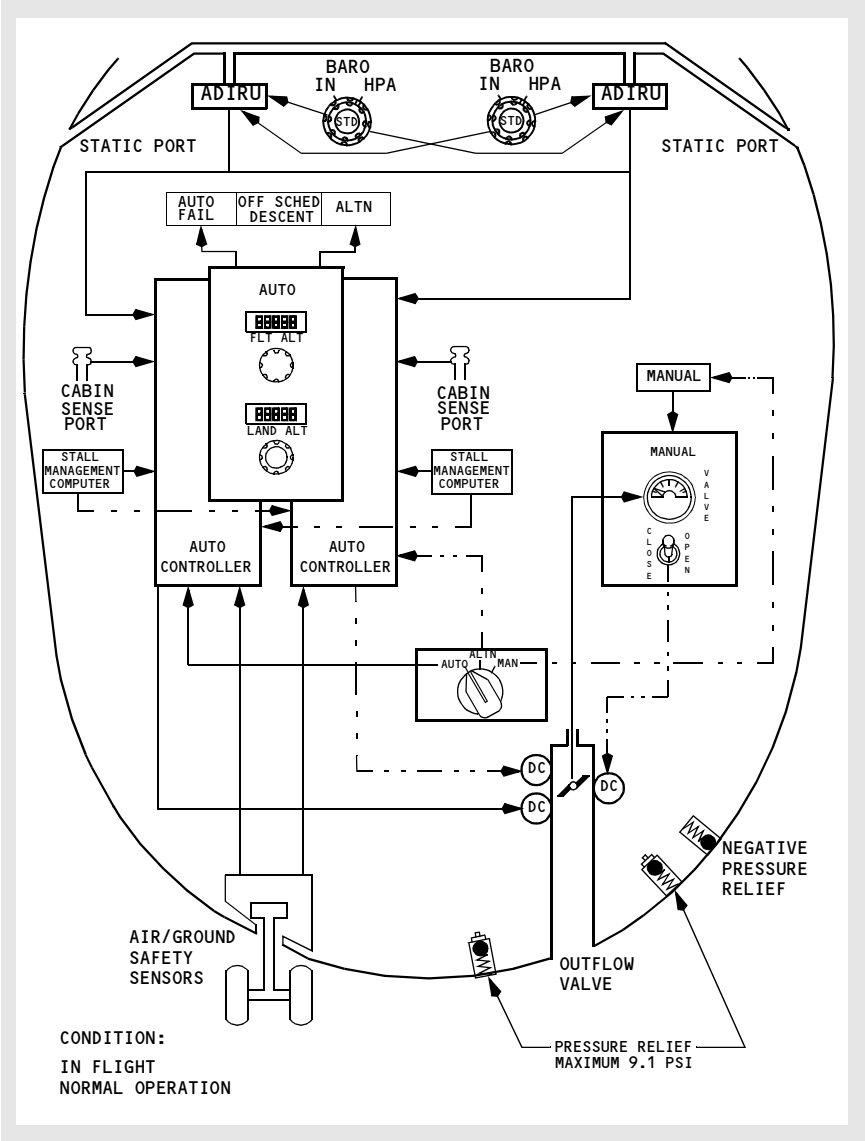

Pressurization Outflow

Cabin air outflow is controlled by the outflow valve and the overboard exhaust valve. A small amount is also exhausted through toilet and galley vents, miscellaneous fixed vents, and by seal leakage.

Copyright © The Boeing Company. See title page for details.

Outflow Valve

The outflow valve is the overboard exhaust exit for the majority of the air circulated through the passenger cabin. Passenger cabin air is drawn through foot level grills, down around the aft cargo compartment, where it provides heating, and is discharged overboard through the outflow valve.

Overboard Exhaust Valve

On the ground and in flight with low differential pressure, the overboard exhaust valve is open and warm air from the E & E bay is discharged overboard. In flight, at higher cabin differential pressures, the overboard exhaust valve is normally closed and exhaust air is diffused to the lining of the forward cargo compartment.

[737-600 or 737-700]
However, the overboard exhaust valve is driven open if either pack switch is in high and the recirculation fan is off. This allows for increased ventilation in the smoke removal configuration.

[737-800 or 737-900]
However, the overboard exhaust valve is driven open if either pack switch is in high and the right recirculation fan is off. This allows for increased ventilation in the smoke removal configuration.

Copyright © The Boeing Company. See title page for details.

Pressurization Outflow Schematic

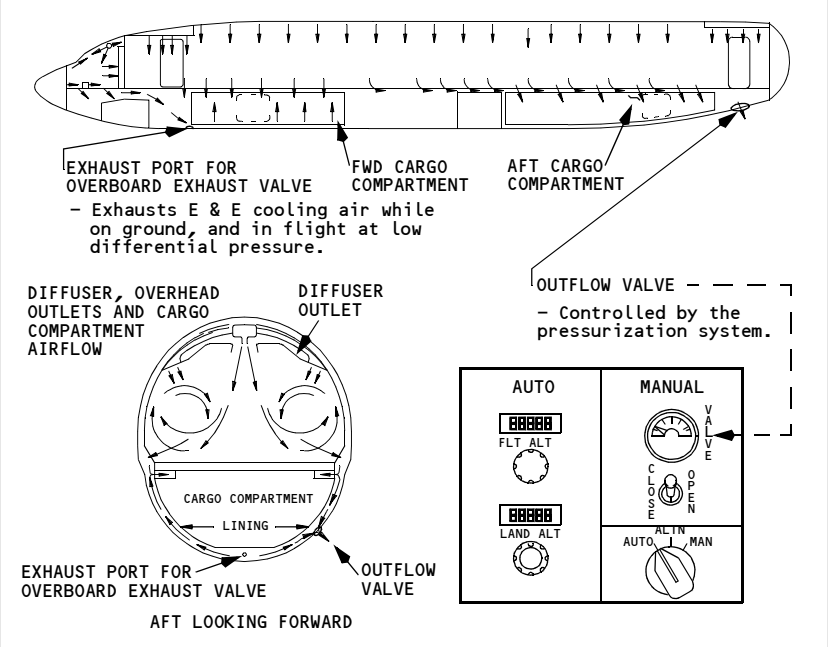

Copyright © The Boeing Company. See title page for details.

Auto Mode Operation

The AUTO system consists of two identical controllers, with one controller alternately sequenced as the primary operational controller for each new flight. The other automatic controller is immediately available as a backup.

In the AUTO or ALTN mode, the pressurization control panel is used to preset two altitudes into the auto controllers:

- FLT ALT (flight or cruise altitude).
- LAND ALT (landing or destination airport altitude).

Takeoff airport altitude (actually cabin altitude) is fed into the auto controllers at all times when on the ground.

The air/ground safety sensor signals whether the airplane is on the ground or in the air. On the ground and at lower power settings, the cabin is depressurized by driving the outflow valve to the full open position.

The cabin begins to pressurize on the ground at higher power settings. The controller modulates the outflow valve toward close, slightly pressurizing the cabin. This ground pressurization of the cabin makes the transition to pressurized flight more gradual for the passengers and crew, and also gives the system better response to ground effect pressure changes during takeoff.

In the air, the auto controller maintains a proportional pressure differential between airplane and cabin altitude. By increasing the altitude at a rate proportional to the airplane climb rate, cabin altitude change is held to the minimum rate required.

An amber OFF SCHED DESCENT light illuminates if the airplane begins to descend without having reached the preset cruise altitude; for example, a flight aborted in climb and returning to the takeoff airport. The controller programs the cabin to land at the takeoff field elevation without further pilot inputs. If the FLT ALT indicator is changed, the automatic abort capability to the original takeoff field elevation is lost.

The cruise mode is activated when the airplane climbs to within 0.25 psi of the selected FLT ALT. During cruise, the controller maintains the cabin altitude slightly below the selected LAND ALT, if the differential pressure between the selected LAND ALT and FLT ALT is less than or equal to 8.35 psid above 37, 000 feet, 7.80 psid with the FLT ALT between 28,000 and 37,000 feet or 7.45 psid with FLT ALT less than 28,000 feet. If the differential pressure between the selected LAND ALT and FLT ALT is greater than these values, the controller maintains a pressure differential of 8.35 psid above 37,000 feet, 7.80 psid with the FLT ALT between 28,000 or 37,000 feet and 7.45 psid with FLT ALT less than 28,000 feet. Deviations from flight altitude can cause the pressure differential to vary as the controller modulates the outflow valve to maintain a constant cabin altitude.

Copyright © The Boeing Company. See title page for details.

The descent mode is activated when the airplane descends 0.25 psi below the selected FLT ALT. The cabin begins a proportional descent to slightly below the selected LAND ALT. The controller programs the cabin to land slightly pressurized so that rapid changes in altitude during approach result in minimum cabin pressure changes.

While taxiing in, the controller drives the outflow valve slowly to the full open position depressurizing the cabin.

An amber AUTO FAIL light illuminates if any of the following conditions occurs:

- Loss of DC power
- Controller fault
- Outflow valve control fault
- Excessive differential pressure (> 8.75 psi)*
- Excessive rate of cabin pressure change (±2000 sea level feet/minute)*
- High cabin altitude (above 15,800 feet).*

*If controller is not responding properly

With illumination of the AUTO FAIL light, the pressure control automatically transfers to the other auto controller (ALTN mode).

Moving the pressurization mode selector to the ALTN position extinguishes the AUTO FAIL light, however the ALTN light remains illuminated to indicate single channel operation.

High Altitude Landing

[Option - High Altitude Landing System]

When the high altitude landing system is engaged and the actual landing altitude is set, the controller brings the cabin altitude to the landing airport elevation when the descent mode is activated. Upon departure from a high altitude airport, the system returns to normal operation as the cabin descends through 8,000 feet.

Copyright © The Boeing Company. See title page for details.

Flight Path Events – Auto Mode

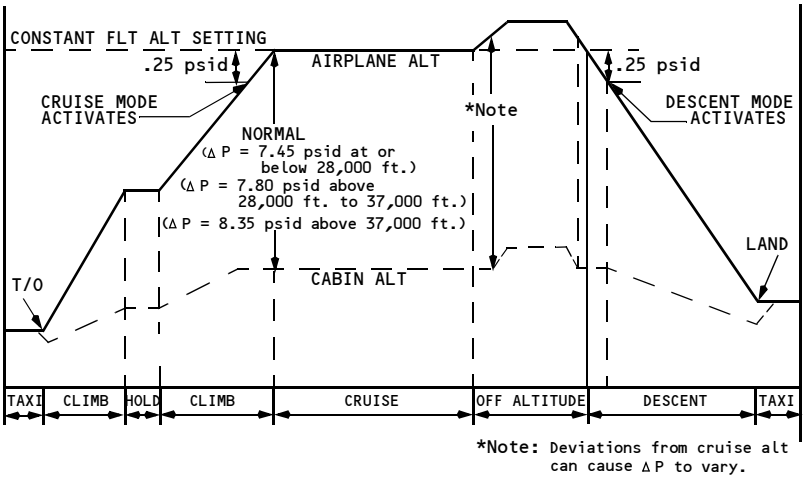

CABIN ALTITUDE VS. AIRPLANE ALTITUDE

Copyright © The Boeing Company. See title page for details.

Manual Mode Operation

A green MANUAL Light illuminates with the pressurization mode selector in the MAN position.

Manual control of the cabin altitude is used if both the AUTO and ALTN modes are inoperative. In the MAN mode, the outflow valve position switch is used to modulate the outflow valve by monitoring the cabin altitude panel and valve position on the outflow valve position indicator. A separate DC motor, powered by the DC standby bus, drives the outflow valve at a slower rate than the automatic modes. Outflow valve full range of motion takes up to 20 seconds.

Copyright © The Boeing Company. See title page for details.

Controls and Indicators 3.10.1
Window Heat Panel. 3.10.1
Windshield/Foot Air Controls. 3.10.2
Windshield Wiper Selector Panel 3.10.3
Probe Heat Panel. 3.10.3
Engine Anti–Ice Panel 3.10.4
Thermal Anti–Ice Indication 3.10.5
Wing Anti–Ice Panel. 3.10.6
Icing Advisory Lights 3.10.7

System Description 3.20.1
Introduction. 3.20.1
Anti-Ice Components Diagram 3.20.1
Flight Deck Window Heat 3.20.2
Flight Deck Window Heat Operation 3.20.2
Flight Deck Window Heat Schematic 3.20.3
Windshield Wipers 3.20.4
Probe and Sensor Heat 3.20.5
Ice Detection System 3.20.5
Engine Anti–Ice System 3.20.5
Engine Anti–Ice System Operation 3.20.6
Engine Anti–Ice System Schematic. 3.20.6
Wing Anti–Ice System 3.20.7
Wing Anti–Ice System Operation 3.20.7
Wing Anti–Ice System Schematic 3.20.8

Copyright © The Boeing Company. See title page for details.

Intentionally
Blank

Copyright © The Boeing Company. See title page for details.

Window Heat Panel

[Option – Green ON Lights]

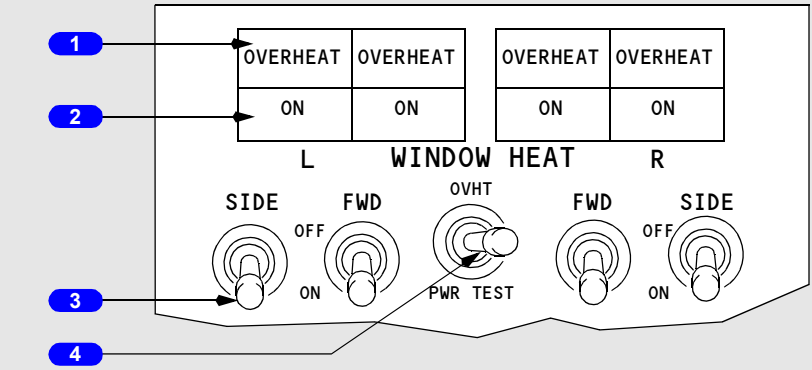

FORWARD OVERHEAD PANEL

[Option – Amber OFF Lights]

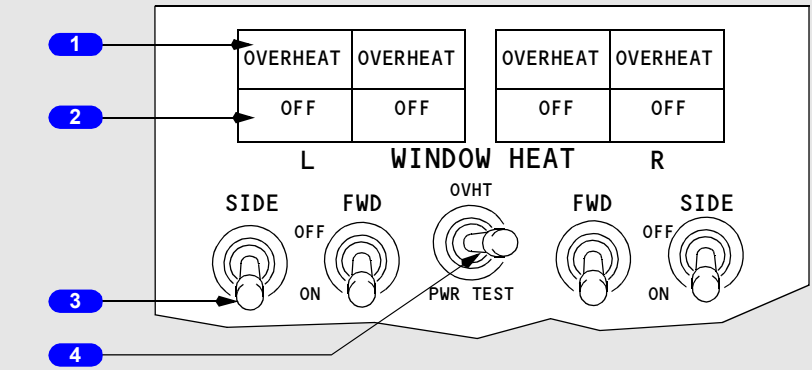

FORWARD OVERHEAD PANEL

1 Window OVERHEAT Lights

Illuminated (amber) – overheat condition is detected.

Note: OVERHEAT lights also illuminate if electrical power to window(s) is interrupted.

Copyright © The Boeing Company. See title page for details.

2 Window Heat ON Lights
[Option – Green ON Lights]

Illuminated (green) – window heat is being applied to selected window(s).

Extinguished –

- switch is OFF, or
- an overheat is detected, or
- a system failure has occurred.

2 Window Heat OFF Lights
[Option – Amber OFF Lights]

Illuminated (amber) –

- switch is OFF, or
- an overheat is detected, or
- a system failure has occurred.

Extinguished – window heat is being applied to selected window(s).

3 WINDOW HEAT Switches

ON – window heat is applied to selected window(s).

OFF – window heat not in use.

4 WINDOW HEAT Test Switch (spring–loaded to neutral)

OVHT – simulates an overheat condition.

PWR TEST – provides a confidence test.

Note: Refer to Supplementary Normal Procedures for Window Heat Test procedures.

Windshield/Foot Air Controls

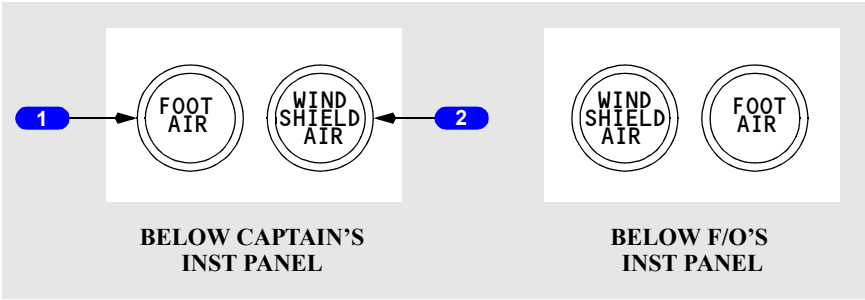

Copyright © The Boeing Company. See title page for details.

1 FOOT AIR Controls

PULL – supplies conditioned air to pilots' leg positions.

2 WINDSHIELD AIR Controls

PULL – supplies conditioned air to number 1 windows for defogging.

Windshield Wiper Selector Panel

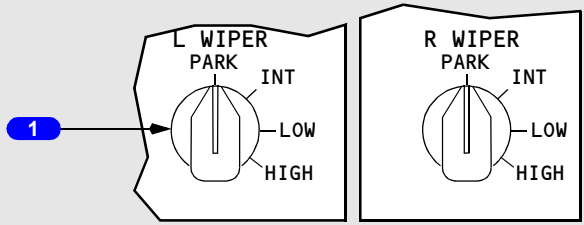

FORWARD OVERHEAD PANEL

1 Windshield WIPER Selectors

PARK – turns off wiper motors and stows wiper blades.

INT – seven second intermittent operation.

LOW – low speed operation.

HIGH – high speed operation.

Probe Heat Panel

[Option - Aspirated TAT]

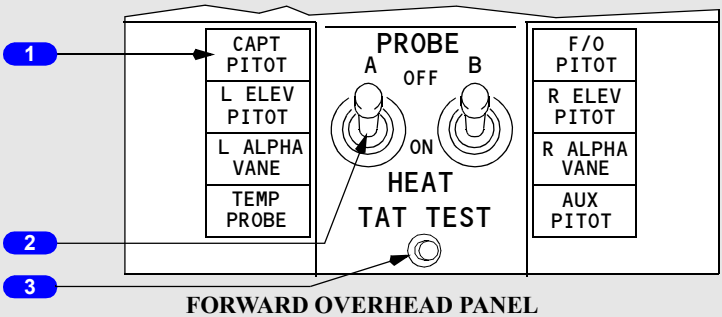

FORWARD OVERHEAD PANEL

Copyright © The Boeing Company. See title page for details.

1 Probe Heat Lights

Illuminated (amber) – related probe not heated.

Note: If operating on standby power, probe heat lights do not indicate system status.

2 PROBE HEAT Switches

ON – power is supplied to heat related system.

OFF – power off.

3 TAT TEST Switch
[Option - Aspirated TAT]

Push - Electrical power applied to TEMP PROBE on the ground.

Engine Anti–Ice Panel

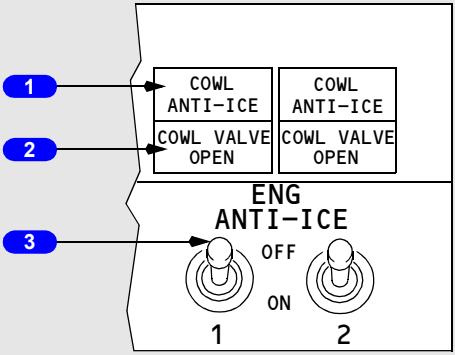

FORWARD OVERHEAD PANEL

1 COWL ANTI–ICE Lights

Illuminated (amber) – indicates an overpressure condition in duct downstream of engine cowl anti–ice valve.

2 COWL VALVE OPEN Lights

Illuminated (blue) –

- bright – related cowl anti–ice valve is in transit, or, cowl anti–ice valve position disagrees with related ENGINE ANTI–ICE switch position
- dim – related cowl anti–ice valve is open (switch ON).

Extinguished – related cowl anti–ice valve is closed (switch OFF).

Copyright © The Boeing Company. See title page for details.

3 ENGINE ANTI–ICE Switches

ON –

- related engine anti–ice valve is open
- stick shaker logic is set for icing conditions.

OFF –

- related engine anti–ice valve is closed
- stick shaker logic returns to normal if wing anti–ice has not been used in flight.

Thermal Anti–Ice Indication

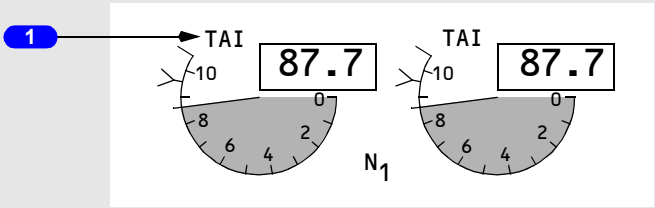

UPPER DISPLAY UNIT

1 Thermal Anti–Ice Indications

Illuminated –

- Green – cowl anti–ice valve(s) open
- Amber – cowl anti–ice valve is not in position indicated by related engine anti–ice switch.

Copyright © The Boeing Company. See title page for details.

Wing Anti–Ice Panel

[Option - ICE DETECTOR System]

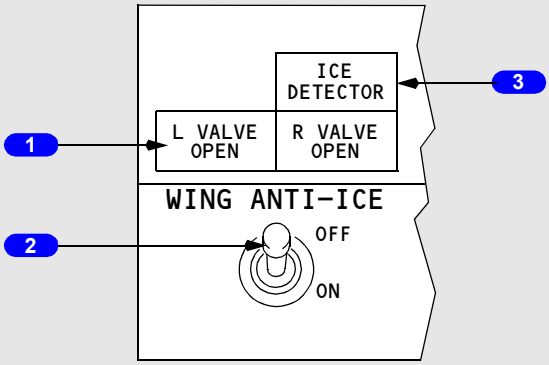

FORWARD OVERHEAD PANEL

1 Wing Anti–Ice VALVE OPEN Lights

Illuminated (blue) –

- bright – related wing anti–ice control valve is in transit, or, related wing anti–ice control valve position disagrees with WING ANTI–ICE switch position
- dim – related wing anti–ice control valve is open (switch ON).

Extinguished – related wing anti–ice control valve is closed (switch OFF).

2 WING ANTI–ICE Switch

OFF – wing anti–ice control valves are closed.

ON (in the air) –

- wing anti–ice control valves are open
- stick shaker logic is set for icing conditions.

  Note: Stick shaker logic remains set for icing conditions for the remainder of the flight, regardless of subsequent WING ANTI–ICE switch position.

ON (on the ground) –

- wing anti–ice control valves open if thrust on both engines is below takeoff warning setting and temperature inside both distribution ducts is below thermal switch activation temperature
- control valves close if either engine thrust is above takeoff warning setting or thermal switch is activated in either distribution duct. Switch remains ON
- switch trips OFF at lift–off.

Copyright © The Boeing Company. See title page for details.

3 ICE DETECTOR Light
[Option - ICE DETECTOR System]

Illuminated (amber) – Ice detector system has failed.

Icing Advisory Lights
[Option - Icing Detector System]

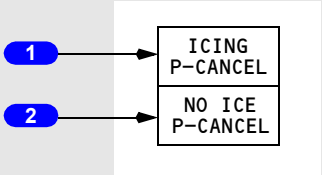

LEFT FORWARD PANEL

1 ICING Light

Illuminated (amber) –

- ice detector is detecting ice
- light is inhibited on the ground.

Press – extinguishes light, if illuminated.

2 NO ICE Light

Illuminated (white) –

- ice detector is not detecting ice, and the ice detector probe had previously detected ice
- light is inhibited on the ground.

Press – extinguishes light, if illuminated.

Copyright © The Boeing Company. See title page for details.

Intentionally
Blank

Copyright © The Boeing Company. See title page for details.

Introduction

Thermal anti-icing (TAI), electrical anti-icing, and windshield wipers are the systems provided for ice and rain protection.

The anti-ice and rain systems include:

- Flight Deck Window Heat
- Windshield Wipers
- Probe and Sensor Heat
- Engine Anti-Ice System
- Wing Anti-Ice System

[Option]

- Ice Detection System

Anti-Ice Components Diagram

[Option - Ice detector probe]

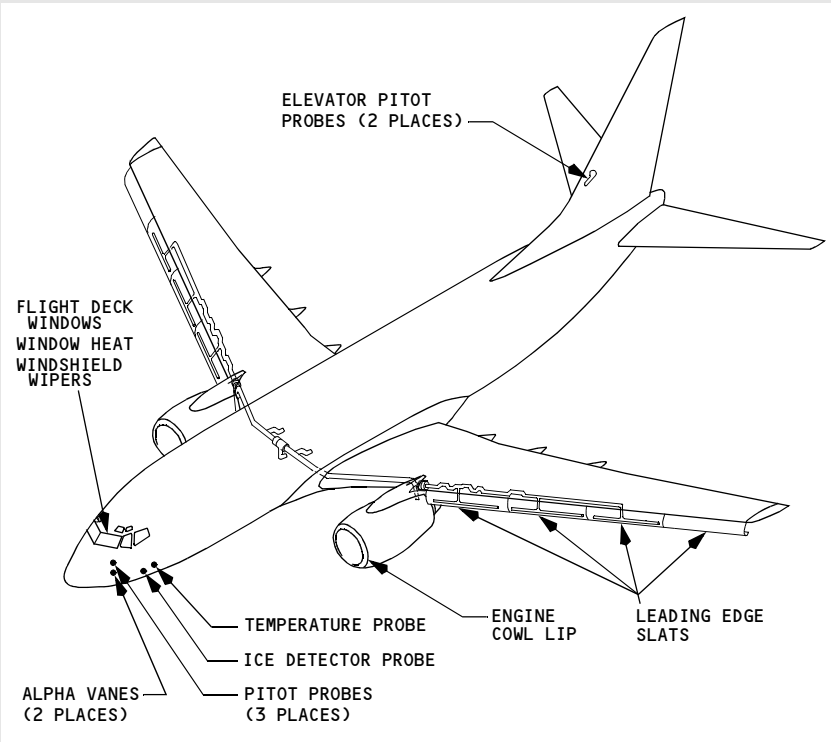

Copyright © The Boeing Company. See title page for details.

Flight Deck Window Heat

[Option - Window # 3 heated]
Flight deck windows consist of glass panes laminated to each side of a vinyl core. Flight deck window number 4 has an additional vinyl layer and acrylic sheet laminated to the inside surface.

[Option - Window # 3 heated]
A conductive coating on the outer glass pane of window numbers 1 and 2 permits electrical heating to prevent ice build–up and fogging. A conductive coating on the inner glass pane of window numbers 3, 4 and 5 permits electrical heating to prevent fogging.

[Option - Window # 3 not heated]
Flight deck window numbers 1, 2, 4 and 5 consist of glass panes laminated to each side of a vinyl core. Flight deck window number 4 has an additional vinyl layer and acrylic sheet laminated to the inside surface. Flight deck window number 3 consists of two acrylic panes separated by an air space.

[Option – Window # 3 not heated]
A conductive coating on the outer glass pane of window numbers 1 and 2 permits electrical heating to prevent ice build–up and fogging. A conductive coating on the inner glass pane of window numbers 4 and 5 permits electrical heating to prevent fogging. Window number 3 is not electrically heated.

Flight Deck Window Heat Operation

[Option –Window # 3 heated]
The FWD WINDOW HEAT switches control heat to window number 1. The SIDE WINDOW HEAT switches control heat to window numbers 2, 3, 4 and 5.

[Option –Window # 3 heated]
Temperature controllers maintain windows numbers 1 and 2 at the correct temperature to ensure maximum strength of the windows in the event of bird impact. Power to window numbers 1 and 2 is automatically removed if an overheat condition is detected. Thermal switches, located on window numbers 3 and 5, open and close to maintain the correct temperature of window numbers 3, 4, and 5.

[Option – Window # 3 not heated]
The FWD WINDOW HEAT switches control heat to window No. 1. The SIDE WINDOW HEAT switches control heat to window numbers 2, 4 and 5.

Copyright © The Boeing Company. See title page for details.

[Option – Window # 3 not heated]

Temperature controllers maintain window numbers 1 and 2 at the correct temperature to ensure maximum strength of the windows in the event of bird impact. Power to window numbers 1 and 2 is automatically removed if an overheat condition is detected. A thermal switch located on window 5 opens and closes to maintain the correct temperature of window numbers 4, and 5.

Flight Deck Window Heat Schematic

[Option –Window # 3 heated and green ON lights]

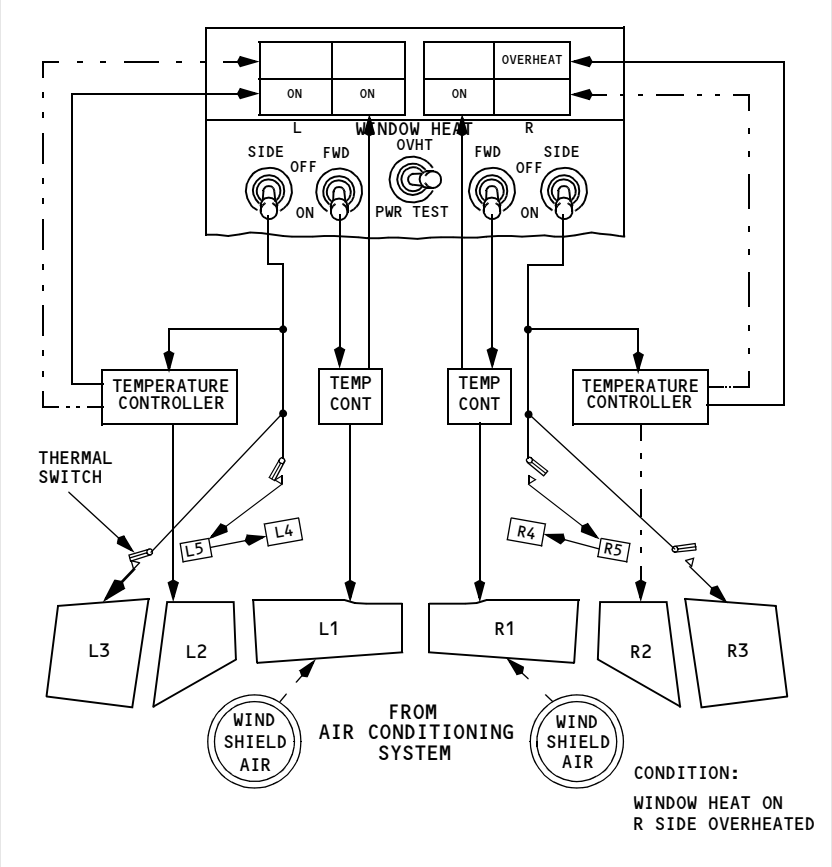

Copyright © The Boeing Company. See title page for details.

[Option –Window # 3 not heated and amber OFF lights]

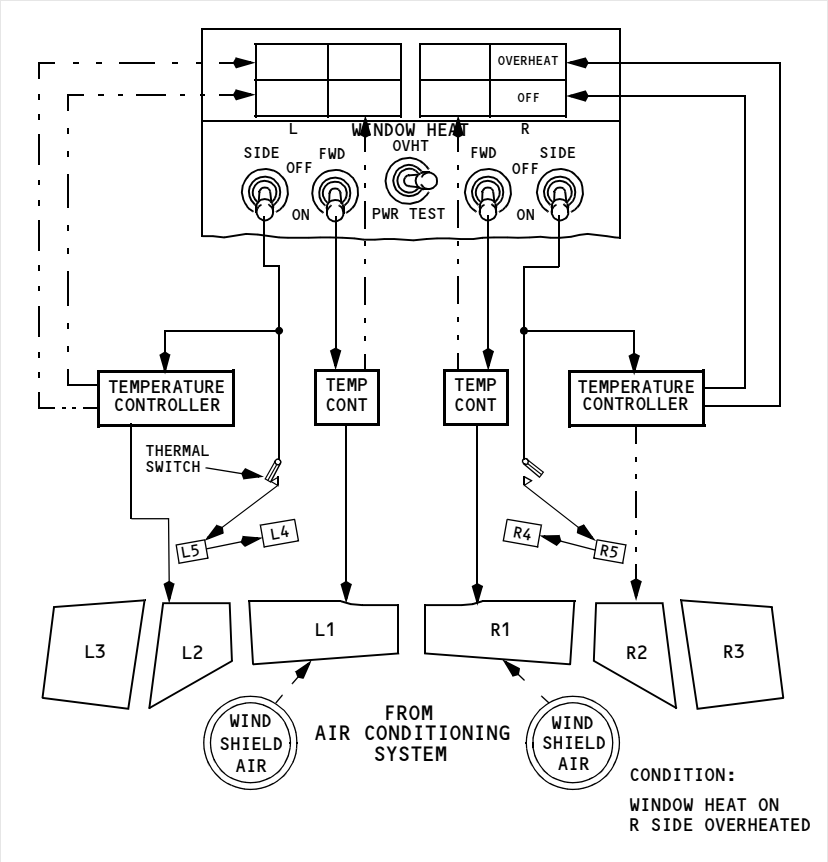

Windshield Wipers

The rain removal system for the forward windows consists of windshield wipers and a permanent rain repellent coating on the windows. The forward windows are equipped with independently controlled wipers.

CAUTION: Windshield scratching will occur if the windshield wipers are operated on a dry windshield.

Copyright © The Boeing Company. See title page for details.

Probe and Sensor Heat

[Option - Captain's pitot probe on standby power]
Pitot probes, the total air temperature probe and the alpha vanes are electrically heated. Static ports are not heated. When operating on standby power, only the captain's pitot probe is heated, however, the CAPT PITOT light does not illuminate for a failure.

Note: The pitot probe for standby airspeed is not heated when the airplane is on standby power.

Ice Detection System

[Option]

An advisory only ice detection system detects airplane icing in flight. The system consists of a probe located on the forward left fuselage and advisory lights located on the left forward panel.

When the probe senses ice build–up inflight, the ICING light illuminates. When ice has previously been detected and the probe is no longer detecting ice, the ICING light will extinguish and the NO ICE light will illuminate. The ICING light and the NO ICE light do not illuminate simultaneously.

Note: Residual ice may remain on the window areas with the NO ICE light illuminated.

The ICE DETECTOR light, located on the forward overhead panel, will illuminate if the ice detection system fails. Illumination of the ICE DETECTOR light also illuminates the MASTER CAUTION and ANTI–ICE system annunciator lights.

Engine Anti–Ice System

Engine bleed air thermal anti–icing prevents the formation of ice on the engine cowl lip. Engine anti–ice operation is controlled by individual ENG ANTI–ICE switches. The engine anti–ice system may be operated on the ground and in flight.

Copyright © The Boeing Company. See title page for details.

Engine Anti–Ice System Operation

Each cowl anti–ice valve is electrically controlled and pressure actuated. Positioning the ENG ANTI–ICE switches to ON:

- allows engine bleed air to flow through the cowl anti–ice valve for cowl lip anti–icing
- sets stick shaker logic for icing conditions.

  Note: Adjusts stick shaker and minimum maneuver speed bars on airspeed indications. FMC displayed VREF is not adjusted automatically.

  Note: Stick shaker logic and airspeed indications return to normal when engine anti–ice is positioned OFF if wing anti–ice has not been used in flight.

If the cowl anti–ice valve fails to move to the position indicated by the ENG ANTI–ICE switch, the COWL VALVE OPEN light remains illuminated bright blue and an amber TAI indication illuminates on the CDS after a short delay.

The amber COWL ANTI–ICE light illuminates due to excessive pressure in the duct leading from the cowl anti–ice valve to the cowl lip.

Engine Anti–Ice System Schematic

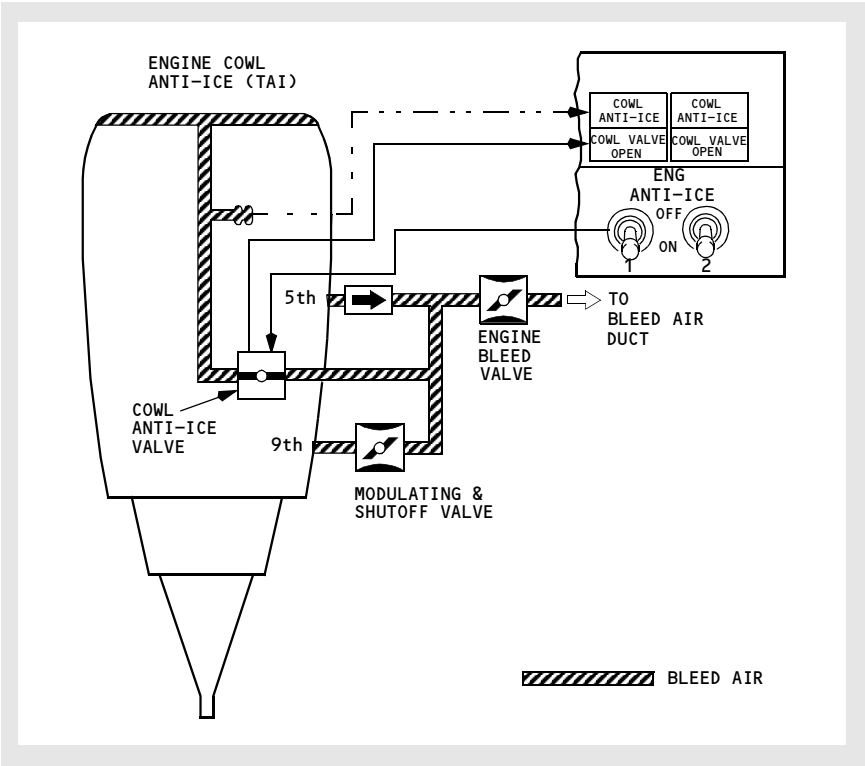

Copyright © The Boeing Company. See title page for details.

Wing Anti–Ice System

The wing anti–ice system provides protection for the three inboard leading edge slats by using bleed air. The wing anti–ice system does not include the leading edge flaps or the outboard leading edge slats.

The wing anti–ice control valves are AC motor–operated. With a valve open, bleed air flows to the three leading edge inboard slats, and is then exhausted overboard. The wing anti–ice system is effective with the slats in any position.

Wing Anti–Ice System Operation

On the ground, positioning the WING ANTI–ICE switch ON opens both control valves if thrust on both engines is below the setting for takeoff warning activation and the temperature inside both wing distribution ducts is less than the thermal switch activation temperature.

Both valves close if either engine thrust is above the takeoff warning setting or either temperature sensor senses a duct overtemperature. The valves automatically reopen if thrust on both engines is reduced and both temperature sensors are cool.

With the air/ground sensor in the ground mode and the WING ANTI–ICE switch ON, the switch remains in the ON position regardless of control valve position. The WING ANTI–ICE switch automatically trips OFF at lift–off when the air/ground sensor goes to the air mode.

Positioning the WING ANTI–ICE switch to ON in flight:

- opens both control valves
- sets stick shaker logic for icing conditions.

  Note: Adjusts stick shaker and minimum maneuver speed bars on airspeed indications. FMC displayed VREF is not adjusted automatically.

  Note: Stick shaker logic remains set for icing conditions for the remainder of the flight, regardless of subsequent WING ANTI–ICE switch position.

Valve position is monitored by the blue VALVE OPEN lights. Duct temperature and thrust setting logic are disabled and have no affect on control valve operation in flight.

Copyright © The Boeing Company. See title page for details.

Wing Anti–Ice System Schematic

[Option - ICE DETECTOR light]

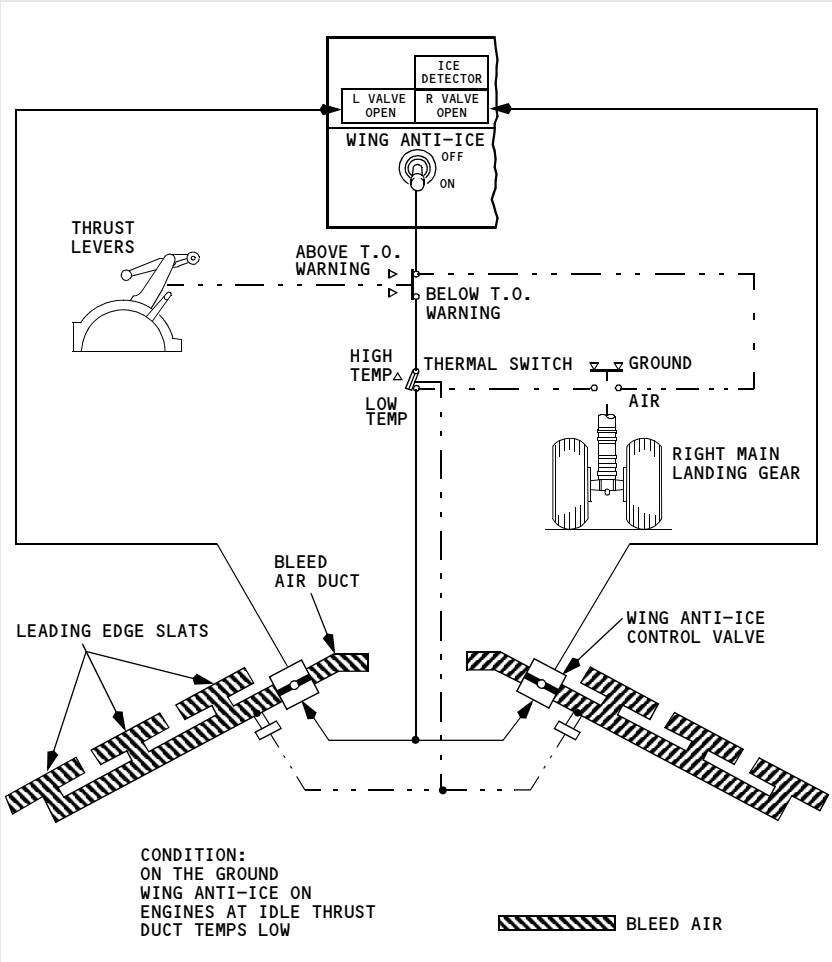

Copyright © The Boeing Company. See title page for details.

DO NOT USE FOR FLIGHT

Controls and Indicators 4.10.1

Mode Control Panel (MCP) 4.10.1

Speed Controls 4.10.1

Vertical Navigation 4.10.5

Lateral Navigation. 4.10.11

Autopilot / Flight Director 4.10.16

Autopilot / Autothrottle Controls 4.10.19

Autopilot / Autothrottle Indicators 4.10.20

Autoland Warning 4.10.21

Thrust Mode Display 4.10.22

Flight Mode Annunciations (FMAs). 4.10.24

System Description 4.20.1

General 4.20.1

Autopilot Flight Director System (AFDS) 4.20.1

MCP Mode Selector Switches 4.20.1

Autopilot Engagement Criteria 4.20.2

Autopilot Disengagement 4.20.2

AFS Failures 4.20.2

Flight Director Display 4.20.3

AFDS Status Annunciation 4.20.4

AFDS Flight Mode Annunciations 4.20.4

Autopilot Control Wheel Steering 4.20.7

Autothrottle System 4.20.8

A/T Engagement 4.20.8

Autothrottle Disengagement 4.20.8

Automatic Flight Operations. 4.20.9

Automatic Flight Takeoff and Climb. 4.20.9

Automatic Flight Takeoff Profile. 4.20.12

Automatic Flight En Route 4.20.13

Copyright © The Boeing Company. See title page for details.

Automatic Flight Approach and Landing 4.20.14
Automatic Flight Approach Profile 4.20.17
Go–Around. 4.20.19
Automatic Flight Go–Around Profile 4.20.23
AFS Operation in Windshear 4.20.24
General 4.20.24
Takeoff or Go–Around 4.20.25
Approach and Landing 4.20.25
Command Speed Limiting and Reversion Modes. 4.20.25
Command Speed Limiting 4.20.25
Reversion Modes 4.20.26

Copyright © The Boeing Company. See title page for details.

Mode Control Panel (MCP)

[Option - With speed and altitude intervention]

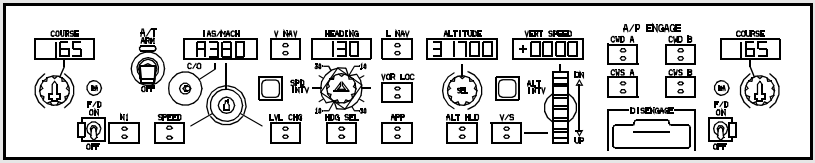

GLARESHIELD

[Option - Without speed and altitude intervention]

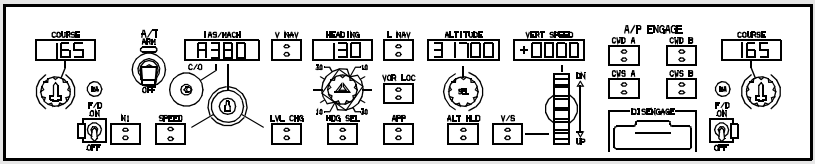

GLARESHIELD

Speed Controls

[Option - With speed and altitude intervention]

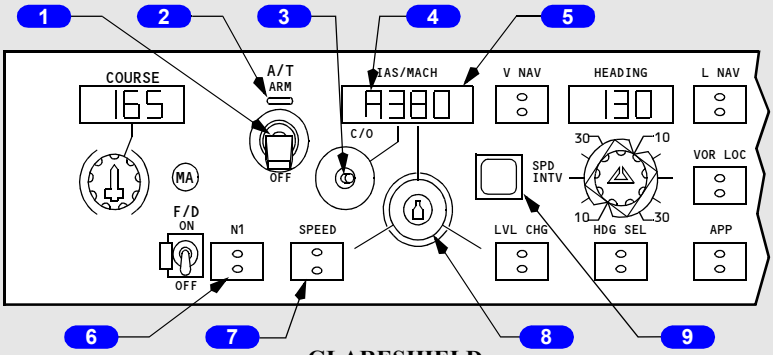

GLARESHIELD

Copyright © The Boeing Company. See title page for details.

DO NOT USE FOR FLIGHT

[Option - Without speed and altitude intervention]

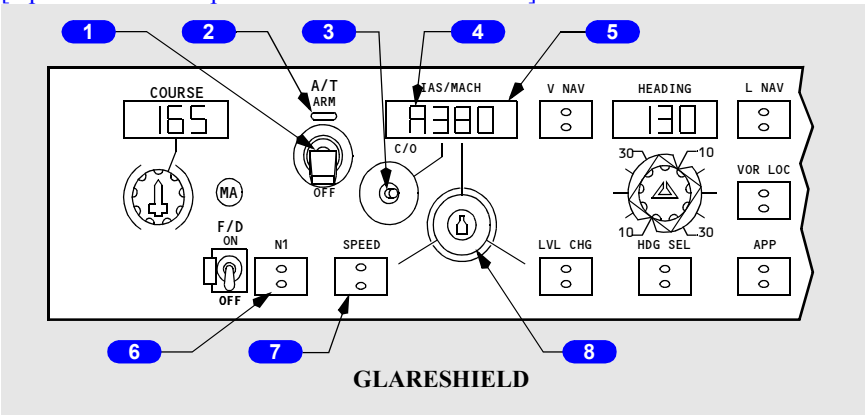

GLARESHIELD

1 Autothrottle (A/T) Arm Switch

ARM – Arms A/T for engagement. Magnetically held at ARM. A/T engages automatically when following AFDS modes are engaged:

- LVL CHG
- ALT ACQ
- V/S
- VNAV
- ALT HOLD
- G/S capture
- TO/GA.

OFF – disengages A/T and prevents A/T engagement.

2 Autothrottle Indicator Light

Illuminated (green) – A/T ARM switch in ARM position.

3 Changeover (C/O) Switch

Push –

- changes IAS/MACH display between IAS and MACH
- automatic changeover occurs at approximately FL260.

4 MCP Speed Condition Symbols

Overspeed or underspeed limiting symbol appears when commanded speed cannot be reached.

Underspeed limiting (flashing character “A”) – minimum speed

Copyright © The Boeing Company. See title page for details.

Overspeed limiting (flashing character “8”) –

- Vmo or Mmo limit
- landing gear limit
- flap limit.

5 IAS/MACH Display

Displays speed selected by IAS/MACH selector

- display is blank when:
  - VNAV mode engaged
  - A/T engaged in FMC SPD mode
  - during 2 engine AFDS go–around
- displays 100 knots when power is first applied
- display range is:
  - 100 KIAS – Vmo in 1 knot increments
  - .60M – Mmo in .01M increments.

6 N1 Switch

Push – (light not illuminated)

- engages A/T in N1 mode if compatible with AFDS modes already engaged
- illuminates N1 switch light
- annunciates N1 autothrottle mode.

Push – (light illuminated)

- deselects N1 mode and extinguishes switch light
- engages autothrottles in ARM mode.

N1 Mode

- A/T maintains thrust at N1 limit selected from FMC CDU. N1 mode engaged manually by pushing N1 switch if N1 mode is compatible with existing AFDS modes. N1 mode engages automatically when:
  - engaging LVL CHG in climb (except during inhibit period for 2 1/2 minutes after lift-off)
  - engaging VNAV in climb.

7 SPEED Switch

Push – (light not illuminated)

- engages A/T in SPEED mode if compatible with engaged AFDS modes
- illuminates SPEED switch light
- annunciates MCP SPD autothrottle mode
- maintains speed in MCP IAS/MACH display.

Copyright © The Boeing Company. See title page for details.

Push – (light illuminated)

- deselects speed mode and extinguishes switch light
- engages A/T in ARM mode.

Speed Mode

Autothrottle holds speed in IAS/MACH display or a performance or limit speed. Speed mode engaged manually by pushing SPEED switch if speed mode is compatible with existing AFDS modes. Speed mode engages automatically when:

- ALT ACQ engages
- ALT HOLD engages
- V/S engages
- G/S capture occurs.

A/T does not set thrust above displayed N1 limit, however, A/T can exceed N1 value manually set by N1 Manual Set Knob.

8 IAS/MACH Selector

Rotate –

- sets speed in IAS/MACH display and positions airspeed cursor
- selected speed is reference speed for AFDS and A/T
- not operative when IAS/MACH display is blank.

9 Speed Intervention (SPD INTV) Switch
[Option - With speed and altitude intervention]

Push (when VNAV engaged) –

- IAS/MACH display alternately shows selected IAS/Mach and blanks
- when IAS/MACH display is unblanked, FMC speed intervention is active, FMC target speed is displayed, and IAS/MACH Selector may be used to set desired speed
- when IAS/MACH display is blank, FMC computed target speed is active and displayed on the airspeed indicator.

Copyright © The Boeing Company. See title page for details.

Vertical Navigation

[Option - With speed and altitude intervention]

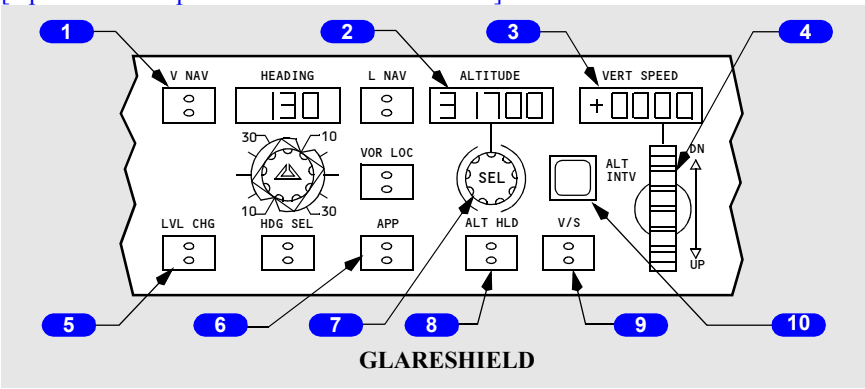

[Option - Without speed and altitude intervention]

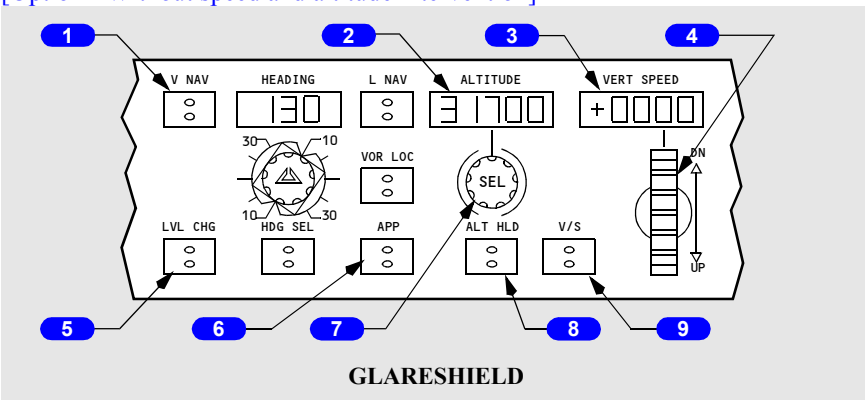

1 VNAV Switch

Push –

- VNAV switch light illuminates
- pitch mode annunciates VNAV SPD, VNAV PTH
- A/T mode annunciates FMC SPD, N1, RETARD, or ARM
- IAS/MACH display blanks and airspeed cursors positioned to FMC commanded airspeed.

VNAV Mode

Copyright © The Boeing Company. See title page for details.

The FMC commands AFDS pitch and autothrottle to fly vertical profile selected on FMC CDUs. Profile includes climb, cruise, descent, speeds, and can also include waypoint altitude constraints.

Note: If the airplane is between the FMC target altitude (depicted on the RTE LEGS page for the active waypoint) and the manually entered MCP target altitude, VNAV will not engage. To enable VNAV, adjust the FMC or MCP target altitude as appropriate.

Climb –

- autothrottle holds FMC thrust limit
- AFDS holds FMC target speed
- automatic level-off occurs at MCP altitude or VNAV altitude, whichever is reached first
  - VNAV constrained level-off annunciates VNAV PTH.

Cruise –

- autothrottle holds FMC target speed
- AFDS holds FMC altitude
- selecting a lower MCP altitude arms FMC to automatically begin descent upon arrival at FMC top of descent point.

Descent –

- VNAV SPD descent
  - autothrottle holds idle
  - AFDS holds FMC target speed.
- VNAV PTH descent
  - autothrottle holds idle but can command FMC SPD mode if ground speed becomes too low to maintain FMC vertical path
  - AFDS tracks FMC descent path.
- automatic level-off occurs at MCP altitude or VNAV altitude, whichever is reached first
  - VNAV constrained altitude annunciates VNAV PTH.

Inhibited below 400 ft RA or if performance initialization not complete.

VNAV mode is terminated by any one of the following:

- selecting another pitch mode
- glideslope capture
- reaching end of LNAV route

[Option - FMC update 10.3 and later]

- transition of glideslope intercept waypoint if G/S is armed

Copyright © The Boeing Company. See title page for details.

[Option - FMC update 10.3 and later]

- crosstrack deviation exceeds twice the RNP value during PTH descent for an active leg with a database vertical angle and LNAV not engaged
- if the airplane altitude is more than 200 feet below MCP altitude and the autoflight system is not in altitude acquire.

In the event of glideslope intercept waypoint transition, VNAV can be re-engaged.

When the pitch mode changes from VNAV SPD to ALT ACQ during an intermediate level off, the autothrottle will command a target IAS rather than Mach number. This is valid even at altitudes above the IAS/Mach changeover. If the climb is resumed in LVL CHG or V/S, the airspeed window opens at the target IAS which may result in an overspeed condition.

2 ALTITUDE Display

Displays selected altitude

- displayed altitude is reference for altitude alerting and automatic level–offs
- altitude range is 0 to 50,000 feet in 100 foot increments
- displays previously selected altitude when power first applied.

3 Vertical Speed (VERT SPEED) Display

Displays:

- blank when V/S mode not active
- present V/S when V/S mode is engaged with V/S switch
- selected V/S when V/S set with thumbwheel
- range is –7900 to +6000 fpm.

Display increments are:

- 50 fpm if V/S is less than 1000 fpm
- 100 fpm if V/S is 1000 fpm or greater.

4 Vertical Speed Thumbwheel

Rotate –

- DN –
  - sets vertical speed in VERT SPEED display
  - increases rate of descent or reduces rate of ascent.
- UP –
  - sets vertical speed in VERT SPEED display
  - increases rate of ascent or reduces rate of descent.

Copyright © The Boeing Company. See title page for details.

5 Level Change (LVL CHG) Switch

Push –

- LVL CHG switch light illuminates
- pitch mode annunciates MCP SPD for climb or descent
- autothrottle mode annunciates N1 for climb and RETARD followed by ARM for descent
- IAS/MACH display and airspeed cursors display target speed.

LVL CHG Mode

The LVL CHG mode coordinates pitch and thrust commands to make automatic climbs and descents to preselected altitudes at selected airspeeds.

A LVL CHG climb or descent is initiated by:

- selecting a new altitude
- pushing LVL CHG switch
- setting desired airspeed.

Climb –

- autothrottle holds limit thrust
- AFDS holds selected airspeed.

Descent –

- autothrottle holds idle thrust
- AFDS holds selected airspeed.

Airspeed –

- if a speed mode is active when LVL CHG is engaged, this speed is retained as target speed
- if a speed mode is not active when LVL CHG is engaged, existing speed becomes target speed
- speed can be changed with MCP IAS/MACH Selector.

The LVL CHG mode is inhibited after glideslope capture.

6 Approach (APP) Switch

(See Lateral Navigation)

7 Altitude Selector (SEL)

Rotate –

- sets altitude in ALTITUDE display in 100 foot increments
- arms V/S mode if rotated while in ALT HOLD at selected altitude.

Copyright © The Boeing Company. See title page for details.

8 Altitude Hold (ALT HLD) Switch

Push –

- engages ALT HOLD command mode
- commands pitch to hold uncorrected barometric altitude at which switch was pressed
- annunciates ALT HOLD pitch mode and illuminates ALT HLD switch light.

Altitude Hold Command Mode

ALT HOLD mode commands pitch to hold either:

- MCP selected altitude
  - pitch mode annunciates ALT HOLD
  - ALT HLD switch light extinguishes.
- uncorrected barometric altitude at which ALT HLD switch was pressed if not at MCP selected altitude
  - pitch mode annunciates ALT HOLD
  - ALT HLD switch light illuminates.

When in ALT HOLD at selected MCP altitude:

- selecting a new MCP altitude illuminates the ALT HLD switch light and arms V/S mode
- LVL CHG, V/S, and VNAV climb and descent functions are inhibited until a new MCP altitude is selected.

ALT HOLD mode is inhibited after G/S capture.

The selected MCP altitude is referenced to:

- Captain's barometric altimeter setting for A A/P and F/D
- First Officer's barometric altimeter setting for B A/P and F/D.

Note: After ALT HOLD engages, changes in altimeter barometric settings do not change the selected altitude reference.

9 Vertical Speed (V/S) Switch

Push –

- arms or engages V/S command mode
- commands pitch to hold vertical speed
- engages A/T in speed mode to hold selected airspeed
- annunciates V/S pitch mode and illuminates V/S switch light.

Vertical Speed Command Mode

The V/S mode commands pitch to hold selected vertical speed and engages A/T in SPEED mode to hold selected airspeed. V/S mode has both an armed and an engaged state.

Copyright © The Boeing Company. See title page for details.

Engaged –

- annunciates V/S pitch mode
- vertical speed display changes from blank to present vertical speed
- desired vertical speeds can be selected with vertical speed thumbwheel.

V/S becomes armed if:

- pitch mode is ALT HLD at selected MCP altitude and
- new MCP altitude is selected (more than 100 feet from current altitude).

With V/S armed, V/S mode is engaged by moving vertical speed thumbwheel.

V/S mode automatically engages if ALT ACQ mode is engaged and a new MCP altitude is selected which is more than 100 feet different from previously selected altitude.

- vertical speeds can be selected which command flight toward or away from selected altitude.

Inhibited if:

- ALT HOLD mode is active at selected MCP altitude
- glideslope captured in APP mode.

10 Altitude Intervention (ALT INTV) Switch
[Option - With speed and altitude intervention]

Allows manual deletion of next FMC altitude constraint via altitude SEL and ALT INTV switch.

Push – (during VNAV climb)

- lowest FMC altitude constraint below selected MCP altitude is deleted
- if airplane is currently at an FMC altitude constraint, deletion allows airplane to resume climb. MCP altitude must be set above current altitude
- for each press of switch, one deletion occurs
- if MCP altitude is set above current FMC altitude, FMC cruise altitude resets to MCP altitude. FMC cruise altitude cannot be decreased using ALT INTV switch.

Push – (during VNAV cruise)

- if MCP altitude is set above current FMC cruise altitude, FMC resets cruise altitude to MCP altitude and initiates a cruise climb
- if MCP altitude is set below current FMC cruise altitude, an early descent is initiated. Lower FMC cruise altitude cannot be entered using ALT INTV switch.

Copyright © The Boeing Company. See title page for details.

Push – (during VNAV descent)

- the highest FMC altitude constraint above MCP altitude is deleted
- if airplane is currently at an FMC altitude constraint, deletion allows airplane to continue descent. MCP altitude must be set below current altitude
- if all FMC altitude constraints are deleted during VNAV path descent, an automatic transition to a VNAV speed descent is made.

Lateral Navigation

[Option - With speed and altitude intervention]

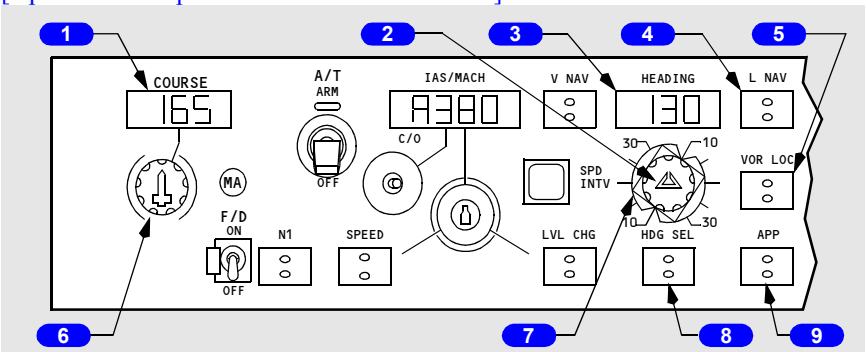

GLARESHIELD

[Option - Without speed and altitude intervention]

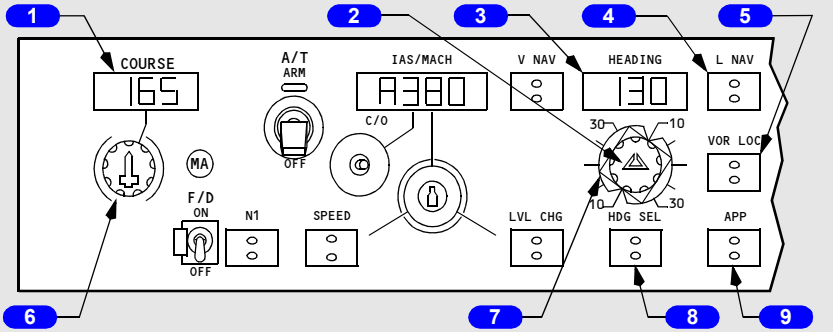

GLARESHIELD

1 COURSE Display

Displays course set by course selector.

Note: Different courses and frequencies on two VHF NAV receivers can cause disagreement between Captain and FO F/D displays and affect A/P operation.

Copyright © The Boeing Company. See title page for details.

2 Heading Selector

Rotate –

- sets heading in HEADING display
- positions selected heading bugs on the DUs.

3 HEADING Display

Displays selected heading.

4 LNAV Switch

Push –

- commands AFDS roll to intercept and track the active FMC route
- annunciates LNAV as roll mode and illuminates LNAV switch light.

LNAV Mode

In LNAV mode, the FMC controls AFDS roll to intercept and track active FMC route. Active route is entered and modified through FMC CDUs and can include SIDs, STARs, and instrument approaches.

LNAV engagement criteria on the ground:

- origin runway in flight plan
- active route entered in FMC
- track of first leg within 5 degrees of runway heading
- LNAV selected prior to TO/GA. Once TO/GA is engaged, the LNAV switch light is extinguished until 400 feet AGL
  - LNAV guidance becomes active at 50 feet AGL

[Option - Bank angle limit is 30 degrees above 200 AGL]
[Option - Honeywell FCC -708 or -904 or -905]

- bank angle is limited to 8 degrees below 200 feet and 30 degrees above 200 feet AGL.

LNAV engagement criteria in flight:

- active route entered in FMC
- within 3 NM of active route, LNAV engagement occurs with any airplane heading
- outside of 3 NM, airplane must:
  - be on intercept course of 90 degrees or less
  - intercept route segment before active waypoint.

LNAV automatically disconnects for following reasons:

- reaching end of active route
- reaching a route discontinuity
- intercepting a selected approach course in VOR LOC or APP modes (VOR/LOC armed)

Copyright © The Boeing Company. See title page for details.

- selecting HDG SEL
- loss of capture criteria.

5 VOR Localizer (LOC) Switch

Push –

- commands AFDS roll to capture and track selected VOR or LOC course
- annunciates VOR/LOC armed or engaged as roll mode and illuminates VOR LOC switch light.

VOR LOC Mode

Pushing the VOR LOC switch selects VOR mode if a VOR frequency is tuned or selects LOC mode if a localizer frequency is tuned.

The VOR mode provides roll commands to track selected VOR course.

The LOC mode provides roll commands to track selected localizer course along inbound front course bearing.

The selected course can be intercepted while engaged in:

- LNAV
- HDG SEL
- CWS R if an autopilot is engaged in CMD.

The capture point is variable and depends on intercept angle and closure rate. Localizer capture occurs not later than 1/2 dot deviation. Course capture is indicated when VOR/LOC annunciation changes from armed to engaged.

While engaged in VOR or LOC modes:

- A autopilot and Captain's F/D use information from Captain's course selector and No. 1 VHF NAV receiver
- B autopilot and First Officer's F/D use information from First Officer's course selector and No. 2 VHF NAV receiver
- different courses and/or frequencies for two VHF NAV receivers can cause disagreement between the Captain's and First Officer's F/D displays and affect A/P operation.

Note: When a localizer frequency is selected, VHF NAV radios automatically switch from tail antenna to nose antenna when VOR/LOC is annunciated (armed or engaged). If antenna switching does not occur, LOC mode is inhibited.

Note: Localizer backcourse tracking is not available.

6 Course Selector

Sets course in COURSE display for related VHF NAV receiver, AFDS and DU. Two course selectors and COURSE displays are located on the MCP.

Copyright © The Boeing Company. See title page for details.

Rotate Captain's course selector – provides selected course information to:

- A FCC
- No. 1 VHF NAV receiver
- Captain's course pointer and course deviation bar.

Note: In VOR LOC or APP mode, the A A/P and Captain's F/D use selected course and navigation data from the No. 1 VHF NAV receiver.

Rotate First Officer's course selector – provides selected course information to:

- B FCC
- No. 2 VHF NAV receiver
- First Officer's course pointer and course deviation bar.

Note: In VOR LOC or APP mode, B A/P and First Officer's F/D use selected course and navigation data from No. 2 VHF NAV receiver.

7 Bank Angle Selector

Rotate –

- sets maximum bank angle for AFDS operation in HDG SEL or VOR modes
- commanded bank angle can be selected at 10, 15, 20, 25, or 30 degrees.

8 Heading Select (HDG SEL) Switch

Push –

- engages HDG SEL command mode
- commands roll to follow selected heading
- annunciates HDG SEL as FMA roll mode and illuminates HDG SEL switch light.

Heading Select Command Mode

The HDG SEL mode commands roll to turn to and maintain heading shown in MCP HEADING display:

- initial selection commands turn in shortest direction toward selected heading bug
- after mode engagement, roll commands are given to turn in same direction as rotation of heading selector
- bank angle limit is established by bank angle selector
- HDG SEL mode automatically disengages upon capture of selected radio course in VOR LOC and APP modes (VOR/LOC armed).

Copyright © The Boeing Company. See title page for details.

9 Approach (APP) Switch

Push –

- illuminates APP switch light
- arms the AFDS for localizer and glideslope capture
- roll mode annunciates VOR/LOC armed
- pitch mode annunciates G/S armed
- enables engagement of both autopilots.

APP Mode

The approach mode arms AFDS to capture and track localizer and glideslope and can be engaged for dual or single autopilot operation.

One VHF NAV receiver must be tuned to an ILS frequency before approach mode can be engaged. With one VHF NAV receiver tuned, onside AFDS is enabled for guidance and operation.

For dual autopilot operation, both VHF NAV receivers must be tuned to the ILS frequency and both autopilots must be selected in CMD prior to 800 feet RA.

APP mode operation:

[Option - G/S capture inhibited before LOC capture]

- localizer must be captured prior to glideslope
- localizer can be intercepted in HDG SEL, LNAV, or CWS R

[Option - EFIS/MAP]

- 1 CH annunciates in A/P Status Display after localizer capture
  - for single autopilot approach, 1 CH remains annunciated for entire approach
  - for dual autopilot approach, 1 CH annunciation extinguishes when second autopilot engages and FLARE armed is annunciated

[Option - PFD/ND]

- SINGLE CH annunciates in A/P Status Display after localizer capture
  - for single autopilot approach, SINGLE CH remains annunciated for entire approach
  - for dual autopilot approach, SINGLE CH annunciation extinguishes when second autopilot engages and FLARE armed is annunciated
- glideslope capture occurs at 2/5 dot below glideslope
- APP switch light extinguishes after localizer and glideslope capture.

After localizer and glideslope capture, APP mode can be disengaged by:

- pushing a TO/GA switch
- disengaging autopilot(s) and turning off both F/D switches
- retuning the VHF NAV receiver.

Copyright © The Boeing Company. See title page for details.

While engaged in the APP mode:

- the A autopilot and Captain's F/D use information from Captain's Course Selector and No. 1 VHF NAV receiver
- the B autopilot and First Officer's F/D use information from First Officer's Course Selector and No. 2 VHF NAV receiver
- different courses and/or frequencies for the two VHF NAV receivers can cause disagreement between Captain's and First Officer's F/D displays and affect A/P operation.

[Option - CWS deactivated on approach]

Note: After localizer and glideslope capture, CWS cannot be engaged by manually overriding pitch and roll. Manual override of autopilots causes autopilot disengagement.

Autopilot / Flight Director

Pushing a CMD or CWS switch engages related A/P in CMD or CWS and illuminates switch lights. A/P can operate in CMD, CWS, or a combination of CMD and CWS.

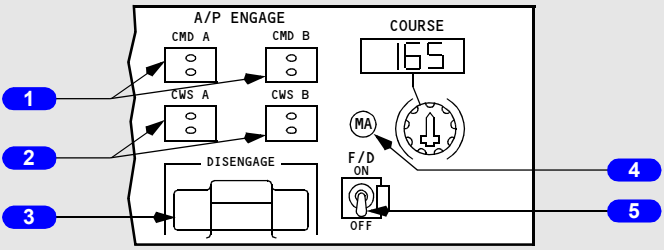

GLARESHIELD

1 Command Engage (CMD ENGAGE) Switch (A or B):

Push –

- engages A/P
- enables all command modes
- displays CMD in A/P status display
- pushing an engage switch for second A/P, while not in approach mode, engages second A/P and disengages first A/P
- enables CWS operation
- CWS engages if:
  - pitch or roll mode not selected
  - pitch or roll mode deselected
  - pitch or roll mode manually overridden with control column force.

Copyright © The Boeing Company. See title page for details.

[Option - CWS deactivated on approach]

Note: After localizer and glideslope capture during a dual autopilot approach, CWS cannot be engaged by manually overriding pitch and roll. Manual override of autopilots causes autopilot disengagement.

- CWS engaged displays:
  - CWS P and/or CWS R in A/P status display
  - blank in pitch and/or roll mode FMA
- when approaching a selected altitude in CWS P, the pitch mode engages in ALT ACQ and ALT HOLD when reaching selected altitude
- when approaching a selected radio course in CWS R with VOR/LOC or approach mode armed, VOR/LOC engages when course is intercepted
- if pitch is manually overridden while in ALT HOLD and control force is released within 250 feet of selected altitude, A/P pitch mode engages in ALT ACQ and returns to selected altitude in ALT HOLD mode.

Note: During F/D only operation while pitch or roll commands are more than 1/2 scale from center, pushing a CMD A or B switch engages the A/P in CWS for pitch and/or roll and the related F/D bar(s) retract.

2 Control Wheel Steering Engage (CWS ENGAGE) Switch (A or B):

Push –

- engages A/P
- engages pitch and roll modes in CWS. Other pitch and roll modes not enabled
- displays CWS P and CWS R in A/P status display
- CMD not displayed in A/P status display
- F/Ds, if ON, display guidance commands and FD annunciates in A/P status display. A/P does not follow commands while in CWS
- A/P pitch and roll controlled by pilot with control wheel pressure
- when control pressure released, A/P holds existing attitude. If aileron pressure released with 6 degrees or less bank, the A/P rolls wings level and holds existing heading. Heading hold feature inhibited:
  - below 1500 feet RA with gear down
  - after LOC capture in APP mode
  - after VOR capture with TAS 250 knots or less.

3 Autopilot Disengage (DISENGAGE) Bar

Pull down –

- exposes yellow background
- disengages both A/Ps
- prevents A/P engagement.

Copyright © The Boeing Company. See title page for details.

Lift up –

- conceals yellow background
- enables A/P engagement.

4 Master (MA) Flight Director Indicators (white letters)

If a F/D switch is ON, the light indicates which FCC is controlling the F/D modes.

- illuminated – related FCC is controlling F/D modes.
- extinguished – F/D modes are controlled from opposite FCC
- both lights illuminated – each FCC is controlling modes for related F/D.

5 Flight Director (F/D) Switch

Left F/D switch activates command bars on the Captain's attitude indicator. Right F/D switch activates command bars on the First Officer's attitude indicator.

Left F/D switch activates the command bar on the Captain's attitude indicator. Right F/D switch activates the command bar on the First Officer's attitude indicator.

ON –

- in flight with A/P ON and F/Ds OFF, turning a F/D switch ON engages F/D in currently selected A/P modes
- displays FD in A/P status display if A/P is OFF or engaged in CWS
- enables command bar display on related pilot's attitude indicator
- command bars are displayed if command pitch and/or roll modes are engaged
- command bars are displayed if command pitch and roll modes are engaged
- on ground, arms pitch and roll modes for engagement in TO/GA and wings level when TOGA switch is pushed.
- on ground, arms pitch and roll modes for engagement in TO/GA and HDG SEL when TOGA switch is pushed.

OFF – command bars retract from related pilot's attitude indicator.

OFF – command bar retracts from related pilot's attitude indicator.

Copyright © The Boeing Company. See title page for details.

Autopilot / Autothrottle Controls

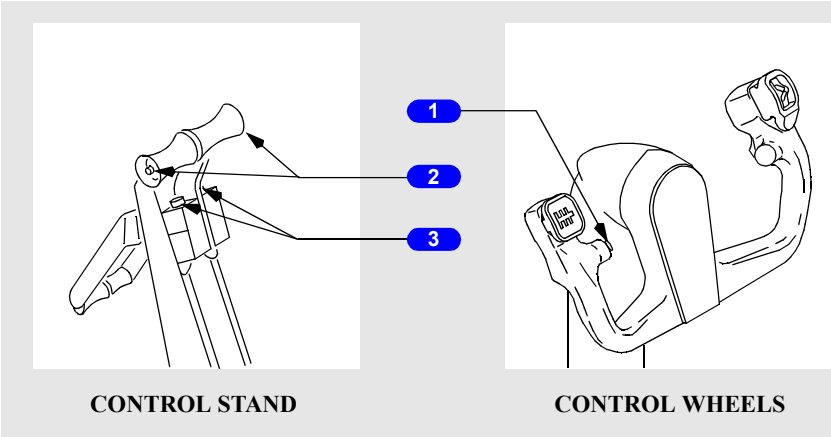

1 Autopilot Disengage Switch

Push –

- disengages both autopilots
- A/P disengage lights flash
- A/P disengage warning tone sounds for a minimum of two seconds
- second push extinguishes disengage lights and silences disengage warning tone
- if autopilot automatically disengages, extinguishes A/P Disengage lights and silences A/P warning tone.

2 Autothrottle Disengage Switches

Push –

- disengages autothrottle
- A/T disengage lights flash
- A/T ARM switch trips OFF
- second press extinguishes A/T disengage lights
- extinguishes A/T disengage lights after automatic A/T disengagement.

3 Takeoff/Go–Around (TO/GA) Switches

Push – engages AFDS and A/T in takeoff or go–around mode if previously armed.

Copyright © The Boeing Company. See title page for details.

Autopilot / Autothrottle Indicators

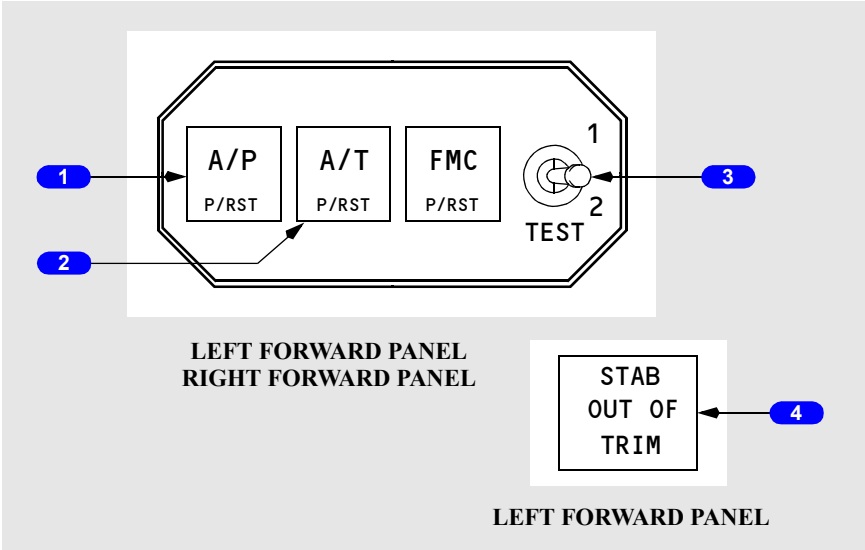

1 Autopilot (A/P) Disengage Light

Illuminated (red) –

- flashes and tone sounds when autopilot has disengaged
- reset by pushing either disengage light or either A/P disengage switch
- steady for any of following conditions:
  - stabilizer out of trim below 800 feet RA on dual channel approach
  - ALT ACQ mode inhibited during A/P go–around if stabilizer not trimmed for single A/P operation
  - disengage light test switch held in position 2
  - automatic ground system tests fail.

Illuminated (amber) –

- steady – disengage light test switch held in position 1.

[Option - CWS warning activated]

- flashing – A/P automatically reverts to CWS pitch or roll while in CMD. Resets by pushing either light or selecting another mode.

2 Autothrottle (A/T) Disengage Light

Illuminated (red) –

- flashing – autothrottle has disengaged
- steady – disengage light test switch held in position 2.

Copyright © The Boeing Company. See title page for details.

Illuminated (amber) –

- steady – disengage light test switch held in position 1

[Option - Airspeed deviation warning activated]

- flashing – indicates A/T airspeed error under following conditions:
  - inflight
  - flaps not up
  - airspeed differs from commanded value by +10 or -5 knots and is not approaching commanded value.

3 Disengage Light Test (TEST) Switch

TEST 1 – illuminates autopilot/autothrottle disengage and FMC alert lights steady amber.

TEST 2 – illuminates autopilot/autothrottle disengage lights steady red and FMC alert light steady amber.

Spring–loaded to center position.

4 Stabilizer Out Of Trim (STAB OUT OF TRIM) Light

Operates only with autopilot engaged. Remains extinguished with autopilot not engaged.

Illuminated (amber) – autopilot not trimming stabilizer properly.

Autoland Warning

[Option]

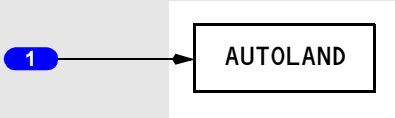

LEFT FORWARD PANEL
RIGHT FORWARD PANEL

1 AUTOLAND Warning Light

Armed during dual ILS A/P approach below 500 feet

Flashes (red) if:

- A/P disengages
- stabilizer trim warning occurs
- ILS deviation occurs below 200 feet.

Copyright © The Boeing Company. See title page for details.

Thrust Mode Display

[Option - Side by side display]

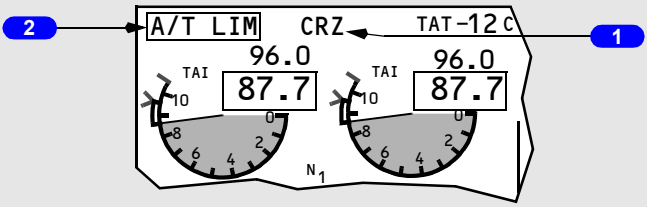

UPPER DISPLAY UNIT

[Option - Over/Under display]

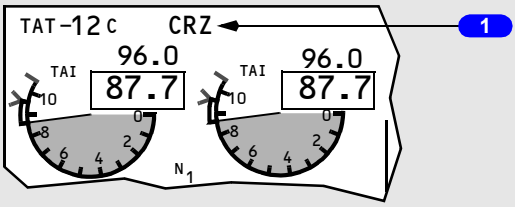

UPPER DISPLAY UNIT

[Option - Over/Under display]

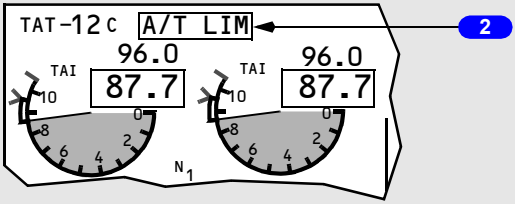

UPPER DISPLAY UNIT

1 Thrust Mode Display

N1 limit reference is the active N1 limit for autothrottle and manual thrust control.

N1 limit reference is also displayed by N1 reference bugs with N1 SET control in AUTO position.

N1 limit reference is normally calculated by the FMC.

Thrust mode display annunciations are:

- TO – takeoff
- R-TO – reduced takeoff

Copyright © The Boeing Company. See title page for details.

- R-CLB – reduced climb

[Option]
- TO B – takeoff bump thrust
- CLB – climb
- CRZ – cruise
- G/A – go–around
- CON – continuous
- —— – FMC not computing thrust limit.

Note: R-TO does not indicate the type of reduced takeoff. The N1 limit may be reduced due to the entry of an assumed temperature, a takeoff thrust derate or a combination of both assumed temperature and takeoff thrust derate.

2 Autothrottle Limit (A/T LIM) Indication

Illuminated (white) – the FMC is not providing the A/T system with N1 limit values. The A/T is using a degraded N1 thrust limit from the related EEC.

Copyright © The Boeing Company. See title page for details.

Flight Mode Annunciations (FMAs)

[Option - EFIS/MAP]

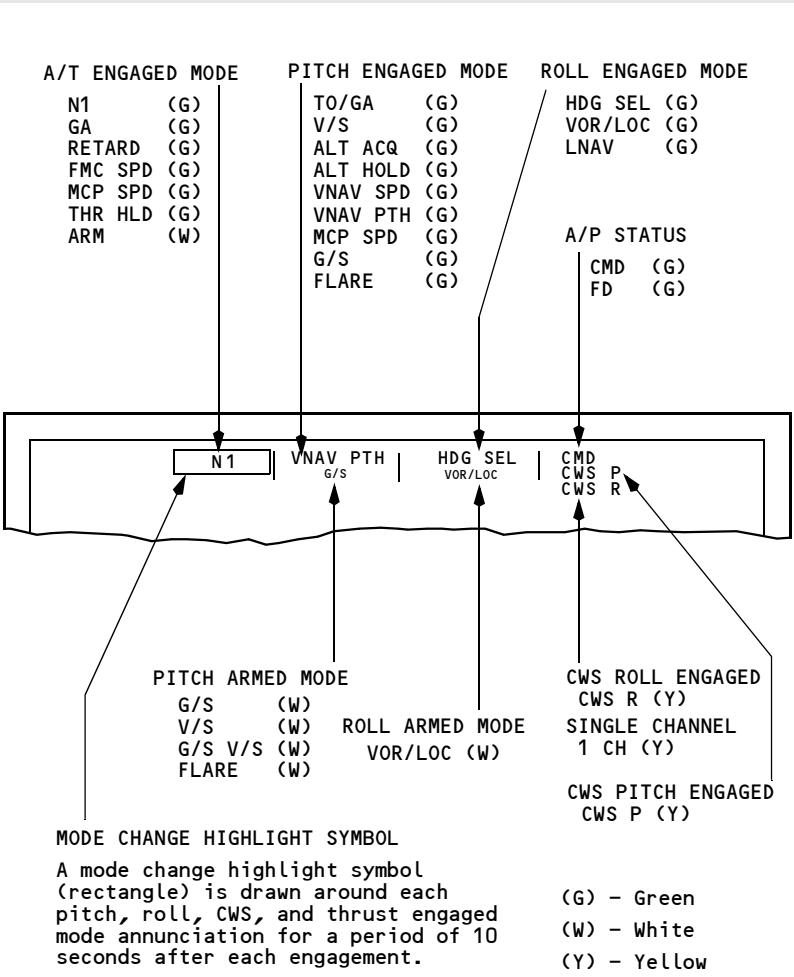

CAPTAIN'S AND FIRST OFFICER'S
DISPLAY UNITS

Copyright © The Boeing Company. See title page for details.

[Option - PFD/ND]

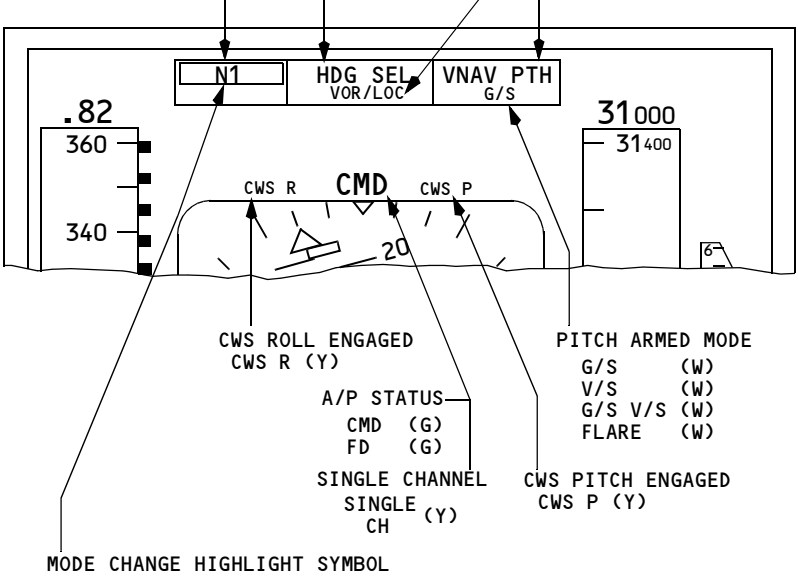

OUTER DISPLAY UNITS

Copyright © The Boeing Company. See title page for details.

Intentionally
Blank

Copyright © The Boeing Company. See title page for details.

DO NOT USE FOR FLIGHT

General

The automatic flight system (AFS) consists of the autopilot flight director system (AFDS) and the autothrottle (A/T). The flight management computer (FMC) provides N1 limits and target N1 for the A/T and command airspeeds for the A/T and AFDS.

The AFDS and A/T are controlled using the AFDS mode control panel (MCP) and the FMC. Normally, the AFDS and A/T are controlled automatically by the FMC to fly an optimized lateral and vertical flight path through climb, cruise and descent.

AFS mode status is displayed on the flight mode annunciation on each pilot's primary display.

Autopilot Flight Director System (AFDS)

The AFDS is a dual system consisting of two individual flight control computers (FCCs) and a single mode control panel.

The two FCCs are identified as A and B. For A/P operation, they send control commands to their respective pitch and roll hydraulic servos, which operate the flight controls through two separate hydraulic systems.

For F/D operation, each FCC positions the F/D command bars on the respective attitude indicator.

MCP Mode Selector Switches

The mode selector switches are pushed to select desired command modes for the AFDS and A/T. The switch illuminates to indicate mode selection and that the mode can be deselected by pushing the switch again. While a mode is active, deselection can be automatically inhibited and is indicated by the switch being extinguished.

When engagement of a mode would conflict with current AFS operation, pushing the mode selector switch has no effect. All AFDS modes can be disengaged either by selecting another command mode or by disengaging the A/P and turning the F/Ds off.

Copyright © The Boeing Company. See title page for details.

Autopilot Engagement Criteria

Each A/P can be engaged by pushing a separate CMD or CWS engage switch. A/P engagement in CMD or CWS is inhibited unless both of the following pilot–controlled conditions are met:

- no force is being applied to the control wheel
- the STAB TRIM AUTOPILOT cutout switch is at NORMAL.

Only one A/P can be engaged at a given time unless the approach (APP) mode is engaged. Approach mode allows both A/Ps to be engaged at the same time. Dual A/P operation provides control through landing flare and touchdown or an automatic go–around.

In single A/P operation, full automatic flare and touchdown capability and A/P go–around capability are not available.

Autopilot Disengagement

The A/P automatically disengages when any of the following occurs:

- pushing either A/P disengage switch
- pushing either Takeoff/Go–around (TO/GA) switch with a single A/P engaged in CWS or CMD below 2000 feet RA

[Option - A/P auto-disengages for TO/GA above 2000 feet RA]
[Option - Honeywell -708 FCC]

- pushing either Takeoff/Go-around (TO/GA) switch with a single A/P engaged in CWS or CMD above 2000 feet RA with flaps down or G/S engaged.
- pushing either TO/GA switch after touchdown with both A/Ps engaged in CMD
- pushing an illuminated A/P ENGAGE switch
- pushing the A/P DISENGAGE bar down
- activating either pilot's control wheel trim switch
- moving the STAB TRIM AUTOPILOT cutout switch to CUTOUT
- either left or right IRS system failure or FAULT light illuminated
- loss of electrical power or a sensor input which prevents proper operation of the engaged A/P and mode
- loss of respective hydraulic system pressure.

Note: Loss of the system A engine-driven hydraulic pump, and a heavy demand on system A, may cause A/P A to disengage.

AFS Failures

Power interruption or loss may cause disengagement of the AFDS and/or A/T. Re–engagement is possible after power is restored.

Copyright © The Boeing Company. See title page for details.

Dual channel A/P operation is possible only when two generators are powering the busses.

Two independent radio altimeters provide radio altitude to the respective FCCs. With a radio altimeter inoperative, do not use the associated FCC for approach or landing, and do not use the associated autopilot for approach.

Flight Director Display

Turning a F/D switch ON displays command bars on the respective pilot's attitude indicator if command pitch and roll modes are engaged. If command pitch and roll modes are not engaged, the F/D command bars do not appear. The F/Ds can be operated with or without the A/P and A/T. F/D command modes can be used with an A/P engaged in CWS.

F/D commands operate in the same command modes as the A/P except:

- the takeoff mode is a F/D only mode
- dual F/D guidance is available for single engine operation
- the F/D has no landing flare capability. F/D command bars retract from view at approximately 50 feet RA on an ILS approach.

Normally, FCC A drives the captain's command bars and FCC B drives the first officer's command bars. With both F/D switches ON, the logic for both pilots' F/D modes is controlled by the master FCC, and both FMA displays show the same mode status.

The master FCC is indicated by illumination of the respective master (MA) F/D indicator light. The master FCC is determined as follows:

- with neither A/P engaged in CMD, the FCC for the first F/D turned on is the master
- with one or both A/Ps engaged in CMD, the FCC for the first A/P in CMD is the master FCC, regardless of which F/D is turned on first.

F/D modes are controlled directly from the respective FCC under certain conditions. This independent F/D operation occurs when neither A/P is engaged in CMD, both F/D switches are ON and one of the following mode conditions exists:

- APP mode engaged with LOC and G/S captured
- GA mode engaged and below 400 feet RA
- TO mode engaged and below 400 feet RA.

Independent F/D operation is indicated by illumination of both MA lights. When independent operation terminates, the MA light extinguishes on the slaved side.

If a generator is lost during a F/D TO or GA, or while in dual F/D APP mode below 800 feet, the FCC on the unaffected side positions the F/D command bars on both attitude indicators. If the F/D MA light on the affected side had been illuminated, it extinguishes upon electrical bus transfer.

Copyright © The Boeing Company. See title page for details.

AFDS Status Annunciation

The following AFDS status annunciations are displayed in the A/P status display located above the attitude indicator on the outboard display unit:

- CMD (one or both autopilots are engaged)
- FD (the flight director is ON and the autopilot is either OFF or engaged in CWS)
- CWS P (pitch mode engaged in CWS)
- CWS R (roll mode engaged in CWS)

[Option - EFIS/MAP]

- 1 CH (for single A/P ILS approach, annunciates after localizer capture and remains on for entire approach. For dual A/P ILS approach, annunciates after localizer capture and extinguishes after pitch monitor confidence test is successfully completed).

[Option - PFD/ND]

- SINGLE CH (for single A/P ILS approach, annunciates after localizer capture and remains on for entire approach. For dual A/P ILS approach, annunciates after localizer capture and extinguishes after pitch monitor confidence test is successfully completed).

AFDS Flight Mode Annunciations

The flight mode annunciations are displayed just above the attitude indicator on the outboard display unit. The mode annunciations, from left to right, are:

[Option - EFIS/MAP]

- autothrottle
- pitch
- roll.

[Option - PFD/ND]

- autothrottle
- roll
- pitch.

Engaged or captured modes are shown at the top of the flight mode annunciation boxes in large green letters. Armed modes are shown in smaller white letters at the bottom of the flight mode annunciation boxes.

Autothrottle Modes

- N1 – the autothrottle maintains thrust at the selected N1 limit displayed on the thrust mode display
- GA – the autothrottle maintains thrust at reduced go–around setting or full go–around N1 limit
- RETARD – displayed while autothrottle moves thrust levers to the aft stop. RETARD mode is followed by ARM mode

Copyright © The Boeing Company. See title page for details.

- FMC SPD – the autothrottle maintains speed commanded by the FMC. The autothrottle is limited to the N1 value shown on the thrust mode display
- MCP SPD – the autothrottle maintains speed set in the MCP IAS/MACH display. The autothrottle is limited to the N1 value shown on the thrust mode display
- THR HLD – the thrust lever autothrottle servos are inhibited; the pilot can set the thrust levers manually
- ARM – no autothrottle mode engaged. The thrust lever autothrottle servos are inhibited; the pilot can set thrust levers manually.

Pitch Modes

- TO/GA – Takeoff

  Engaged for takeoff by turning both F/D switches ON and pushing either TO/GA switch. Both F/Ds must be ON to engage TO/GA prior to starting takeoff.

  The AFDS commands pitch attitude in the following order:
  - 10 degrees nose down until 60 knots IAS
  - 15 degrees nose up after 60 knots IAS
  - 15 degrees nose up after lift–off until a sufficient climb rate is acquired. Then, pitch is commanded to maintain MCP speed plus 20 knots.

    TO/GA can also be engaged for takeoff with F/D switches OFF if a TO/GA switch is pushed after 80 knots IAS below 2000 feet AGL and prior to 150 seconds after lift–off.
- TO/GA – Go–around

  Engaged for go–around by pushing the TO/GA switch under the following conditions:
  - inflight below 2000 feet radio altitude

[Option - A/P auto-disengages for TO/GA above 2000 feet RA]
[Option - Honeywell -708 FCC]
  - inflight above 2000 feet radio altitude with flaps down or G/S captured
  - not in takeoff mode
  - either F/D ON or OFF.

Copyright © The Boeing Company. See title page for details.

The F/Ds command 15 degrees nose up pitch and roll to hold the approach ground track at time of go–around engagement. After reaching a programmed rate of climb, pitch commands the target airspeed for each flap setting based on maximum takeoff weight calculations.

- VNAV –

  VNAV is engaged by pushing the VNAV switch. With a VNAV mode engaged, the FMC commands AFDS pitch and A/T modes to fly the vertical profile.
  - VNAV SPD – the AFDS maintains the FMC speed displayed on the airspeed indicator and/or the CDU CLIMB or DESCENT pages
  - VNAV PTH – the AFDS maintains FMC altitude or descent path with pitch commands.
- V/S (engaged) – commands pitch to hold selected vertical speed
- V/S (armed) – V/S mode can be engaged by moving Vertical Speed thumbwheel
- ALT ACQ – transition maneuver entered automatically from a V/S, LVL CHG, or VNAV climb or descent to selected MCP altitude. Engages but does not annunciate during VNAV transition
- ALT HOLD – commands pitch to hold MCP selected altitude or uncorrected barometric altitude at which ALT HOLD switch was pushed
- MCP SPD – pitch commands maintain IAS/MACH window airspeed or Mach
- G/S (armed) – the AFDS is armed for G/S capture
- G/S (engaged) – the AFDS follows the ILS glideslope
- FLARE (armed) – during a dual A/P ILS approach, FLARE is displayed after LOC and G/S capture and below 1500 feet RA. The second A/P couples with the flight controls and A/P go–around mode arms
- FLARE (engaged) – during a dual A/P ILS approach, flare engages at 50 feet radio altitude. FLARE accomplishes the autoland flare maneuver.

Roll Modes

- LNAV – the AFDS intercepts and tracks the active FMC route. Either of the following capture criteria must be met:
  - on any heading and within 3 NM of the active route segment
  - if outside of 3 NM of active route segment, airplane must be on an intercept course of 90 degrees or less and intercept the route segment before the active waypoint.
- HDG SEL – the airplane is turning to, or is on the heading selected in the MCP Heading Display
- VOR/LOC (armed) – AFDS is armed to capture selected VOR or LOC COURSE
- VOR/LOC (engaged) – AFDS tracks selected VOR course or tracks selected localizer course along the inbound front course bearing.

Copyright © The Boeing Company. See title page for details.

Autopilot Control Wheel Steering

CWS Engage Switch Selected

Pushing a CWS engage switch engages the A/P pitch and roll axes in the CWS mode and displays CWS P and CWS R on the FMAs.

With CWS engaged, the A/P maneuvers the airplane in response to control pressures applied by either pilot. The control pressure is similar to that required for manual flight. When control pressure is released, the A/P holds existing attitude.

If aileron pressure is released with 6 degrees or less bank, the A/P rolls the wings level and holds existing heading. This heading hold feature with bank less than 6 degrees is inhibited when any of the following conditions exists:

- below 1,500 feet RA with the landing gear down
- after F/D VOR capture with TAS 250 knots or less
- after F/D LOC capture in the APP mode.

Pitch CWS with a CMD Engage Switch Selected

The pitch axis engages in CWS while the roll axis is in CMD when:

- a command pitch mode has not been selected or was deselected
- A/P pitch has been manually overridden with control column force. The force required for override is greater than normal CWS control column force. This manual pitch override is inhibited in the APP mode with both A/Ps engaged.

CWS P is annunciated on the FMAs while this mode is engaged. Command pitch modes can then be selected.

When approaching a selected altitude in CWS P with a CMD engage switch selected, CWS P changes to ALT ACQ. When at the selected altitude, ALT HOLD engages.

If pitch is manually overridden while in ALT HOLD at the selected altitude, ALT HOLD changes to CWS P. If control force is released within 250 feet of the selected altitude, CWS P changes to ALT ACQ, the airplane returns to the selected altitude, and ALT HOLD engages. If the elevator force is held until more than 250 feet from the selected altitude, pitch remains in CWS P.

Roll CWS with a CMD Engage Switch Selected

The roll axis engages in CWS while the pitch axis is in CMD when:

- a command roll mode has not been selected or was deselected
- A/P roll has been manually overridden with control wheel force. The force required for override is greater than the normal CWS control wheel force.

CWS R is annunciated on the FMAs while this mode is engaged.

Copyright © The Boeing Company. See title page for details.

CWS R with a CMD engage switch illuminated can be used to capture a selected radio course while the VOR/LOC or APP mode is armed. Upon intercepting the radial or localizer, the F/D and A/P annunciations change from CWS R to VOR/LOC engaged, and the A/P tracks the selected course.

Autothrottle System

The A/T system provides automatic thrust control from the start of takeoff through climb, cruise, descent, approach and go–around or landing. In normal operation, the FMC provides the A/T system with N1 limit values.

The A/T moves the thrust levers with a separate servo motor on each thrust lever. Manually positioning the thrust levers does not cause A/T disengagement unless 10 degrees of thrust lever separation is exceeded during a dual channel approach after FLARE armed is annunciated. Following manual positioning, the A/T may reposition the thrust levers to comply with computed thrust requirements except while in the THR HLD and ARM modes.

The A/T system operates properly with the EECs ON or in ALTN. In either case, the A/T uses the FMC N1 limits. During A/T operation, it is recommended that both EECs be ON or both be in ALTN, as this produces minimum thrust lever separation.

A/T Engagement

Moving the A/T Arm switch to ARM, arms the A/T for engagement in the N1, MCP SPD or FMC SPD mode. The A/T Arm switch is magnetically held at ARM and releases to OFF when the A/T becomes disengaged.

A general summary of A/T mode engagement is as follows:

- A/T SPD or N1 modes automatically engage when AFDS command pitch modes become engaged
- engaging LVL CHG or VNAV climb modes automatically engages the A/T N1 mode
- engaging LVL CHG or VNAV descent modes automatically engages the A/T in RETARD and then ARM when thrust is at idle
- if not in a VNAV mode, engagement of ALT ACQ or ALT HOLD automatically engages the A/T in the MCP SPD mode; otherwise the A/T remains in FMC SPD
- engagement of G/S capture automatically engages the A/T in the MCP SPD mode.

Autothrottle Disengagement

Any of the following conditions or actions disengages the A/T:

- moving the A/T Arm switch to OFF
- pushing either A/T Disengage switch

Copyright © The Boeing Company. See title page for details.

- an A/T system fault is detected
- two seconds have elapsed since landing touchdown
- thrust levers become separated more than 10 degrees during a dual channel approach after FLARE armed is annunciated
- significant thrust difference along with control wheel roll input of 10 degrees or more, and flap position up through 10.

A/T disengagement is followed by A/T Arm switch releasing to OFF and flashing red A/T Disengage lights. The A/T Disengage lights do not illuminate when the A/T automatically disengages after landing touchdown.

Automatic Flight Operations

The phases of flight for automatic flight operations are:

- Takeoff and climb
- Enroute
- Approach and landing
- Go–around

Automatic Flight Takeoff and Climb

Takeoff is a flight director only function of the TO/GA mode. Flight director pitch and roll commands are displayed and the autothrottle maintains takeoff N1 thrust limit as selected from the FMC. The autopilot may be engaged after takeoff.

[Option - Flight director commands wings level on takeoff]
Both F/Ds must be ON to engage the takeoff mode prior to starting the takeoff. The F/D takeoff mode is engaged by pushing the TO/GA switch on either thrust lever. The FMAs display FD as the A/P status, TO/GA as the pitch mode, and blank for the roll mode.

[Option - Flight director commands HDG SEL on takeoff]
Both F/Ds must be ON to engage the takeoff mode prior to starting the takeoff. The F/D takeoff mode is engaged by pushing the TO/GA switch on either thrust lever. The FMAs display FD as the A/P status, TO/GA as the pitch mode, and HDG SEL as the roll mode.

During takeoff, pushing a TO/GA switch engages the autothrottle in the N1 mode. The A/T annunciation changes from ARM to N1 and thrust levers advance toward takeoff thrust.

The F/D can also be engaged in the takeoff mode with the F/D switches off. If a TO/GA switch is pushed after 80 knots below 2000 feet AGL and prior to 150 seconds after lift–off, the F/D command bars automatically appear for both pilots.

[Option - Flight director commands wings level on takeoff]
During takeoff, prior to 60 KIAS:

- the pitch command is 10 degrees nose down
- the roll command is wings level
- the autothrottle is engaged in the N1 mode

Copyright © The Boeing Company. See title page for details.

- thrust levers advance until the engines reach takeoff thrust
- the FMAs display N1 for the autothrottle mode, TO/GA for the pitch mode, and blank for the roll mode.

[Option - Flight director commands HDG SEL on takeoff]
During takeoff, prior to 60 KIAS:

- the pitch command is 10 degrees nose down
- the roll command is HDG SEL
- the autothrottle is engaged in the N1 mode
- thrust levers advance until the engines reach takeoff thrust
- the FMAs display N1 for the autothrottle mode, TO/GA for the pitch mode, and HDG SEL for the roll mode.

At 60 knots, the F/D pitch commands 15 degrees nose up.

At 84 knots, the A/T mode annunciates THR HLD.

At lift–off:

- the pitch command continues at 15 degrees until sufficient climb rate is acquired. Pitch then commands MCP speed (normally V2) plus 20 knots
- if an engine failure occurs during takeoff, the pitch command target speed is:
  - V2, if airspeed is below V2
  - existing speed, if airspeed is between V2 and V2 + 20
  - V2 + 20, if airspeed is above V2 + 20

[Option - Flight director commands wings level on takeoff]

- the roll command maintains wings level.

[Option - Flight director commands HDG SEL on takeoff]
[Option - Honeywell -904/-905 FCC]

- the roll command maintains HDG SEL. Bank angle is limited to 8 degrees until 200 feet AGL.

After lift–off:

- the A/T remains in THR HLD until 800 feet RA. A/T annunciation then changes from THR HLD to ARM and reduction to climb thrust can be made by pushing the N1 switch

[Option - Without automatic thrust reduction after takeoff]

- automatic thrust reduction to climb power occurs when VNAV, ALT ACQ or ALT HOLD is engaged. Until 2 1/2 minutes after liftoff, automatic thrust reduction is inhibited when engaging LVL CHG or V/S modes

Copyright © The Boeing Company. See title page for details.

[Option - Automatic thrust reduction after takeoff, FMC update 10.1 and later]

- automatic reduction to climb thrust occurs upon reaching the selected thrust reduction altitude which is shown on the FMC CDU TAKEOFF REF page 2/2 during preflight, or when the airplane levels off in ALT HOLD or VNAV PTH. Pilot entries can be made to override the default value. Allowable entries are 800 feet to 9999 feet
- flight director engaged status is terminated by engaging an autopilot in CMD (CMD replaces FD in A/P status display)
  - pitch engages in LVL CHG and pitch mode FMA is MCP SPD unless another pitch mode has been selected
  - MCP IAS/Mach display and airspeed cursor change to V2 + 20 knots
  - roll mode engages in HDG SEL unless another roll mode has been selected.

To terminate the takeoff mode below 400 feet RA, both F/D switches must be turned OFF. Above 400 feet RA, selection of another pitch mode or engaging an autopilot will terminate the takeoff mode; other F/D roll modes can be also selected.

Copyright © The Boeing Company. See title page for details.

Automatic Flight Takeoff Profile

[Option - EFIS/MAP, flight director commands wings level on takeoff]

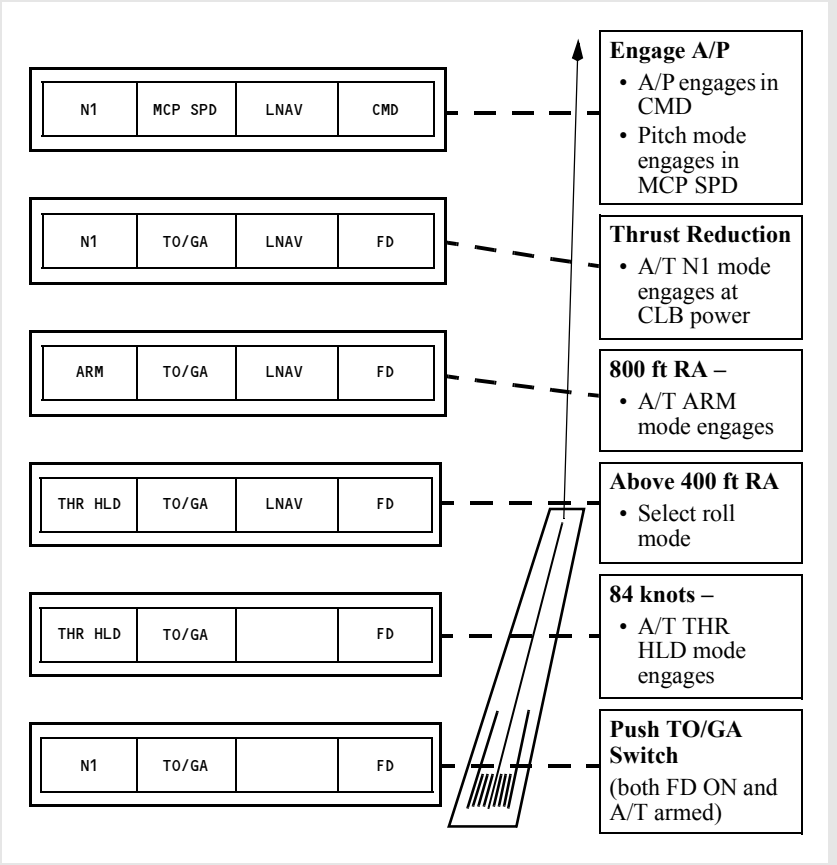

Copyright © The Boeing Company. See title page for details.

[Option - PFD/ND, flight director commands HDG SEL on takeoff]

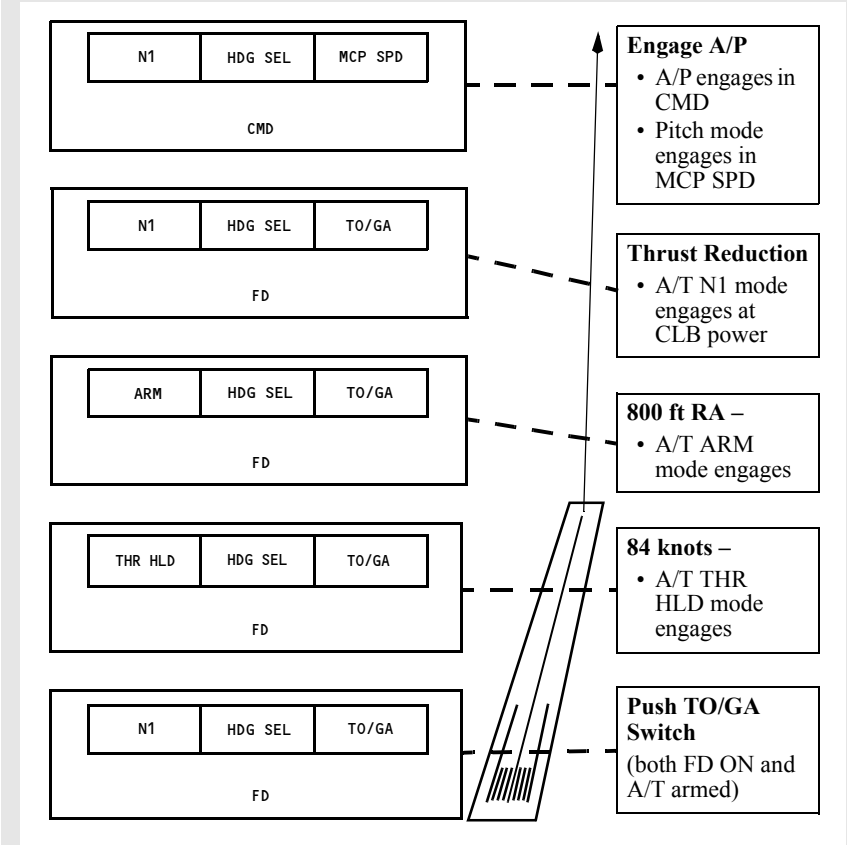

Automatic Flight En Route

The autopilot and/or the flight director can be used after takeoff to fly a lateral navigation track (LNAV) and a vertical navigation track (VNAV) provided by the FMC.

Other roll modes available are:

- VOR course (VOR/LOC)
- heading select (HDG SEL).

Other pitch modes available are:

- altitude hold (ALT HOLD)
- level change (MCP SPD)
- vertical speed (V/S).

Copyright © The Boeing Company. See title page for details.

Automatic Flight Approach and Landing

The AFDS provides guidance for single A/P non–precision approaches. The VOR/LOC switch arms the AFDS for VOR or localizer tracking. Descent may be accomplished using VNAV, LVL CHG, or V/S. VOR/LOC, LNAV, or HDG SEL may be used for the roll mode.

The AFDS provides guidance for single or dual A/P precision approaches. The approach mode arms the AFDS to capture and track the localizer and glideslope.

Approach (APP) Mode Dual A/Ps

Approach mode allows both A/Ps to be engaged at the same time. Dual A/P operation provides fail passive operation through landing flare and touchdown or an automatic go–around. During fail passive operation, the flight controls respond to the A/P commanding the lesser control movement. If a failure occurs in one A/P, the failed channel is counteracted by the second channel such that both A/Ps disconnect with minimal airplane maneuvering and with aural and visual warnings to the pilot.

One VHF NAV receiver must be tuned to an ILS frequency before the approach mode can be selected. For a dual A/P approach, the second VHF NAV receiver must be tuned to the ILS frequency and the corresponding A/P engaged in CMD prior to 800 feet RA.

Localizer and Glideslope Armed

After setting the localizer frequency and course, pushing the APP switch selects the APP mode. The APP switch illuminates and VOR/LOC and G/S annunciate armed. The APP mode permits selecting the second A/P to engage in CMD. This arms the second A/P for automatic engagement after LOC and G/S capture and when descent below 1500 RA occurs.

The localizer can be intercepted in the HDG SEL, CWS R or LNAV mode.

[Option - G/S capture inhibited before LOC capture]
Glideslope (G/S) capture is inhibited prior to localizer capture.

Localizer Capture

[Option - EFIS/MAP]
The LOC capture point is variable and depends on intercept angle and rate of closure, but does not occur at less than 1/2 dot. Upon LOC capture, VOR/LOC annunciates captured, 1 CH is annunciated for A/P status, the previous roll mode disengages and the airplane turns to track the LOC.

Copyright © The Boeing Company. See title page for details.

[Option - PFD/ND]
The LOC capture point is variable and depends on intercept angle and rate of closure, but does not occur at less than 1/2 dot. Upon LOC capture, VOR/LOC annunciates captured, SINGLE CH is annunciated for A/P status, the previous roll mode disengages and the airplane turns to track the LOC.

Glideslope Capture

[Option - G/S capture inhibited before LOC capture]
Glideslope capture is inhibited prior to localizer capture.

The G/S can be captured from above or below. Capture occurs at 2/5 dot and results in the following:

- G/S annunciates captured
- previous pitch mode disengages
- APP light extinguishes if localizer has also been captured
- airplane pitch tracks the G/S
- GA displayed on thrust mode display (N1 thrust limit).

After VOR/LOC and G/S are both captured, the APP mode can be exited by:

- pushing a TO/GA switch
- disengaging A/P and turning off both F/D switches
- retuning a VHF NAV receiver.

After LOC and G/S Capture

Shortly after capturing LOC or G/S and below 1500 feet RA:

- the second A/P couples with the flight controls
- test of the ILS deviation monitor system is performed and the G/S or LOC display turns amber and flashes
- FLARE armed is annunciated

[Option - EFIS/MAP]
- the 1 CH annunciation extinguishes

[Option - PFD/ND]
- the SINGLE CH annunciation extinguishes
- A/P go–around mode arms but is not annunciated.

[Option - CWS deactivated on approach]
Note: After localizer and glideslope capture during a dual autopilot approach, CWS cannot be engaged by manually overriding pitch and roll. Manual override of autopilots causes autopilot disengagement.

The A/Ps disengage and the F/D command bars retract to indicate an invalid ILS signal.

Copyright © The Boeing Company. See title page for details.

800 Feet Radio Altitude

The second A/P must be engaged in CMD by 800 feet RA to execute a dual channel A/P approach. Otherwise, CMD engagement of the second A/P is inhibited.

400 Feet Radio Altitude

The stabilizer is automatically trimmed an additional amount nose up. If the A/Ps subsequently disengage, forward control column force may be required to hold the desired pitch attitude.

If FLARE is not armed by approximately 350 feet RA, both A/Ps automatically disengage.

Flare

The A/P flare maneuver starts at approximately 50 feet RA and is completed at touchdown:

- FLARE engaged is annunciated and F/D command bars retract
- the stabilizer is automatically trimmed an additional amount nose up at 50 feet RA.
- the A/T begins retarding thrust at approximately 27 feet RA so as to reach idle at touchdown. A/T FMA annunciates RETARD.
- the A/T automatically disengages approximately 2 seconds after touchdown.
- the A/P must be manually disengaged after touchdown. Landing rollout is executed manually after disengaging the A/P.

Approach (APP) Mode Single A/P

A single A/P ILS approach can be executed by engaging only one A/P in CMD after pushing the APP mode select switch. Single A/P approach operation is the same as dual, with the following exceptions:

- full automatic flare and touchdown capability is not available. FLARE is not annunciated and stabilizer trim bias is not applied

[Option - EFIS/MAP]

- A/P status of 1 CH is annunciated for the entire approach after localizer capture

[Option - PFD/ND]

- A/P status of SINGLE CH is annunciated for the entire approach after localizer capture
- an A/P go–around is not available.

Copyright © The Boeing Company. See title page for details.

Automatic Flight Approach Profile

[Option - EFIS/MAP]

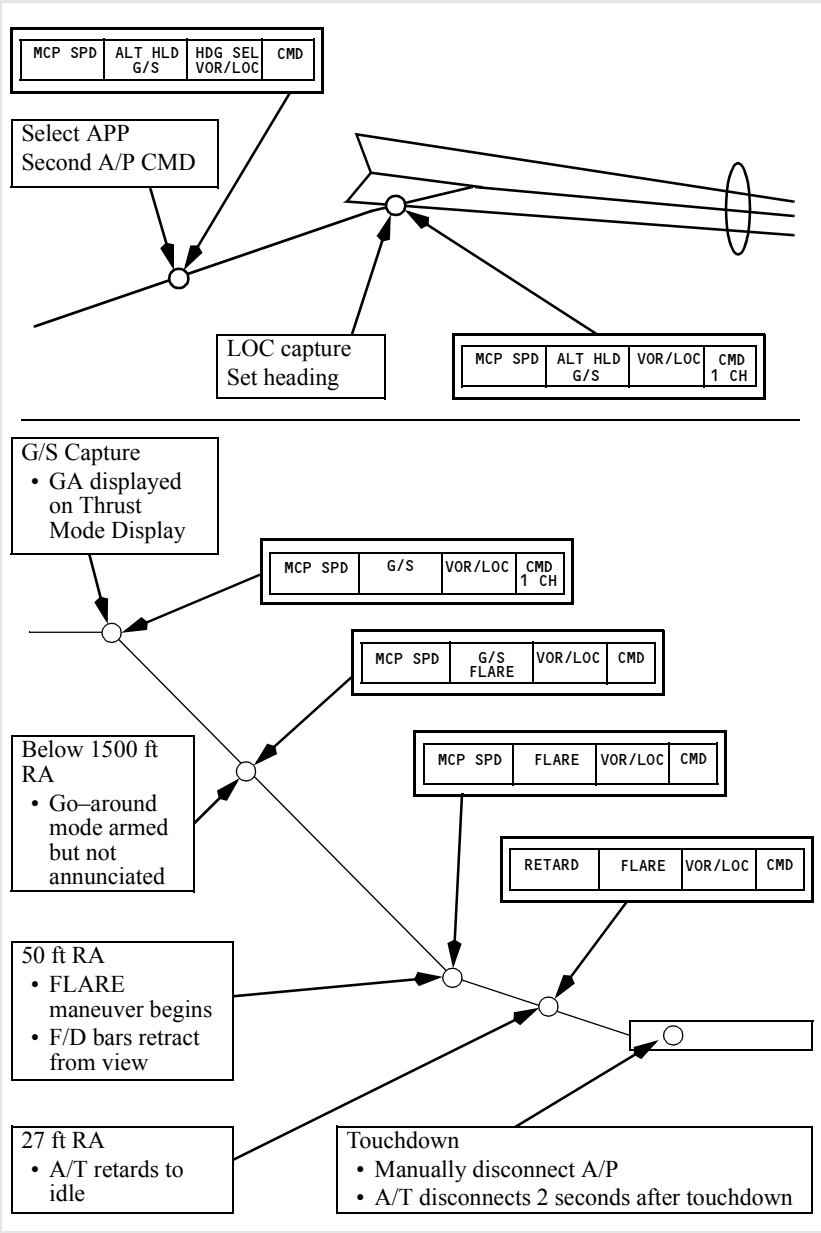

Copyright © The Boeing Company. See title page for details.

[Option - PFD/ND]

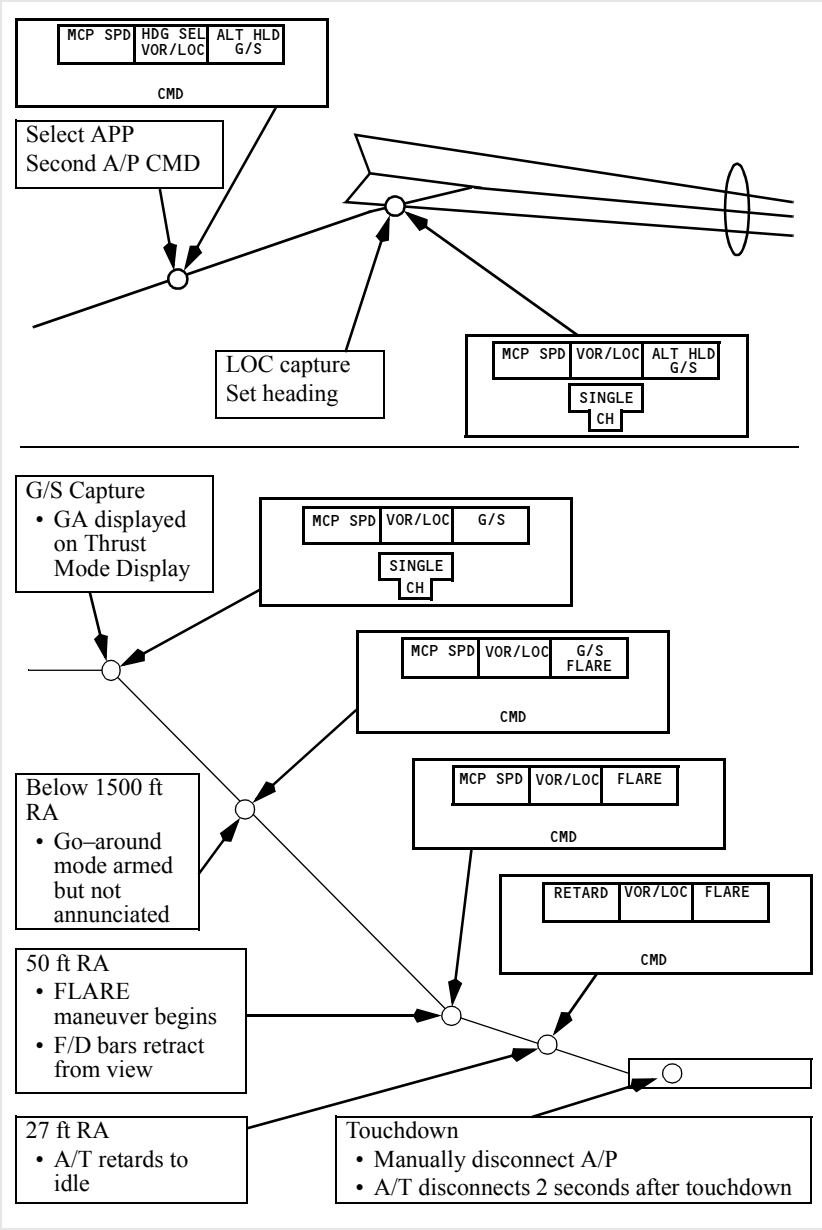

Copyright © The Boeing Company. See title page for details.

Go–Around

Go–Around (GA) mode is engaged by pushing either TO/GA switch. An A/P go–around requires dual A/P operation and is armed when FLARE armed is annunciated. If both A/Ps are not operating, a manual F/D go–around is available.

With the A/T Arm switch at ARM, the A/T go–around mode is armed:

- when descending below 2000 feet RA

[Option - A/P auto disengages for TO/GA above 2000 feet RA]
[Option - Honeywell -708 FCC]

- when above 2000 feet RA with flaps down or G/S captured
- with or without the AFDS engaged.

A/P Go–Around

The A/P GA mode requires dual A/P operation and is available after FLARE armed is annunciated and prior to the A/P sensing touchdown.

With the first push of either TO/GA switch:

- A/T (if armed) engages in GA and the A/T Engaged Mode annunciation on the FMA indicates GA
- thrust advances toward the reduced go–around N1 to produce 1000 to 2000 fpm rate of climb
- pitch mode engages in TO/GA and the Pitch Engaged Mode annunciation on the FMA indicates TO/GA
- F/D pitch commands 15 degrees nose up until reaching programmed rate of climb. F/D pitch then commands target airspeed for each flap setting based on maximum takeoff weight calculations
- F/D roll commands hold current ground track. The Roll Engaged Mode annunciation on the FMA is blank
- the IAS/Mach display blanks
- the command airspeed cursor automatically moves to a target airspeed for the existing flap position based on maximum takeoff weight calculations.

Note: If the go–around mode is selected after touchdown and prior to A/T disengagement, the A/Ps disengage and the A/Ts may command GA thrust.

With the second push of either TO/GA switch after A/T reaches reduced go–around thrust:

- the A/T advances to the full go–around N1 limit.

TO/GA mode termination from A/P go–around:

- below 400 feet RA, the AFDS remains in the go–around mode unless both A/Ps and F/Ds are disengaged
- above 400 feet RA, select a different pitch or roll mode.
  - if the roll mode is changed first:

Copyright © The Boeing Company. See title page for details.

    - the selected mode engages in single A/P roll operation and is controlled by the A/P which was first in CMD
    - pitch remains in dual A/P control in TO/GA mode.
  - if the pitch mode is changed first:
    - the selected mode engages in single A/P pitch operation and is controlled by the A/P which was first in CMD
    - the second A/P disengages
    - the roll mode engages in CWS R.
  - the A/T GA mode is terminated when:
    - another pitch mode is selected
    - ALT ACQ annunciates engaged.

Note: The pitch mode cannot be changed from TO/GA until sufficient nose–down trim has been input to allow single channel A/P operation. This nose–down trim is automatically added by the A/P to reset the trim input made by the A/P at 400 feet RA and at 50 feet RA during the approach.

With pitch mode engaged in TO/GA, ALT ACQ engages when approaching the selected altitude and ALT HOLD engages at the selected altitude if the stabilizer position is satisfactory for single A/P operation.

- if stabilizer trim position is not satisfactory for single A/P operation:
  - ALT ACQ is inhibited
  - A/P disengage lights illuminate steady red
  - pitch remains in TO/GA.

Note: To extinguish A/P disengage lights, disengage A/Ps or select higher altitude on MCP.

F/D Go–Around

If both A/Ps are not engaged, a manual F/D only go–around is available under the following conditions:

- inflight below 2000 feet RA

[Option - A/P auto disengages for TO/GA above 2000 feet RA]
[Option - Honeywell -708 FCC]

- inflight above 2000 feet RA with flaps down or G/S captured
- not in takeoff mode.

With the first push of either TO/GA switch:

- A/T (if armed) engages in GA and advances thrust toward the reduced go–around N1 to produce 1000 to 2000 fpm rate of climb. The A/T Engaged Mode annunciation on the FMA indicates GA
- autopilot (if engaged) disengages
- pitch mode engages in TO/GA and the Pitch Engaged Mode annunciation on the FMA indicates TO/GA

Copyright © The Boeing Company. See title page for details.

- F/D pitch commands 15 degrees nose up until reaching programmed rate of climb. F/D pitch then commands target airspeed for each flap setting based on maximum takeoff weight calculations
- F/D roll commands approach ground track at time of engagement. The Roll Engaged Mode annunciation on the FMA is blank
- the IAS/Mach display blanks
- the command airspeed cursor automatically moves to a target airspeed for the existing flap position based on maximum takeoff weight calculations.

With the second push of either TO/GA switch (if A/T engaged and after A/T reaches reduced go–around thrust):

- the A/T advances to the full go–around N1 limit

TO/GA mode termination from F/D go–around:

- below 400 feet RA, both F/D switches must be turned off.
- above 400 feet RA, select a different pitch or roll mode.
  - if the roll mode is changed first:
    - F/D roll engages in the selected mode
    - the F/D pitch mode remains in TO/GA.
  - if the pitch mode is changed first:
    - the F/D roll mode automatically changes to HDG SEL
    - F/D pitch engages in the selected mode.
  - the A/T GA mode (if engaged) is terminated when:
    - another pitch mode is selected
    - ALT ACQ annunciates engaged.

Note: Engaging an A/P in CMD automatically engages the A/P and F/Ds in LVL CHG for pitch and HDG SEL for roll.

Single Engine F/D Go–Around

With a push of either TO/GA switch:

- F/D roll commands hold current ground track. The Roll Engaged Mode annunciation on the FMA is blank
- pitch mode engages in TO/GA and the Pitch Engaged Mode annunciation on the FMA indicates TO/GA
- the F/D target speed is displayed on IAS/Mach display
- the F/D target speed is displayed on the airspeed cursor
- F/D pitch commands 13 degrees nose up. As climb rate increases, F/D pitch commands maintain a target speed.
  - if engine failure occurs prior to go–around engagement, then F/D target speed is the selected MCP speed.
  - if engine failure occurs after go–around engagement, then F/D target speed depends on whether ten seconds have elapsed since go–around engagement:

Copyright © The Boeing Company. See title page for details.

- if prior to ten seconds, the MCP selected approach speed becomes target speed
- if after ten seconds and the airspeed at engine failure is within five knots of the go–around engagement speed, the airspeed that existed at go–around engagement becomes target speed
- if after ten seconds and the airspeed at engine failure is more than five knots above go–around engagement speed, then the current airspeed becomes target speed.

Note: The target speed is never less than V2 speed based on flap position unless in windshear conditions.

F/D commanded acceleration cannot occur until a higher speed is selected on the MCP IAS/Mach display.

Copyright © The Boeing Company. See title page for details.

Automatic Flight Go–Around Profile

[Option - EFIS/MAP]

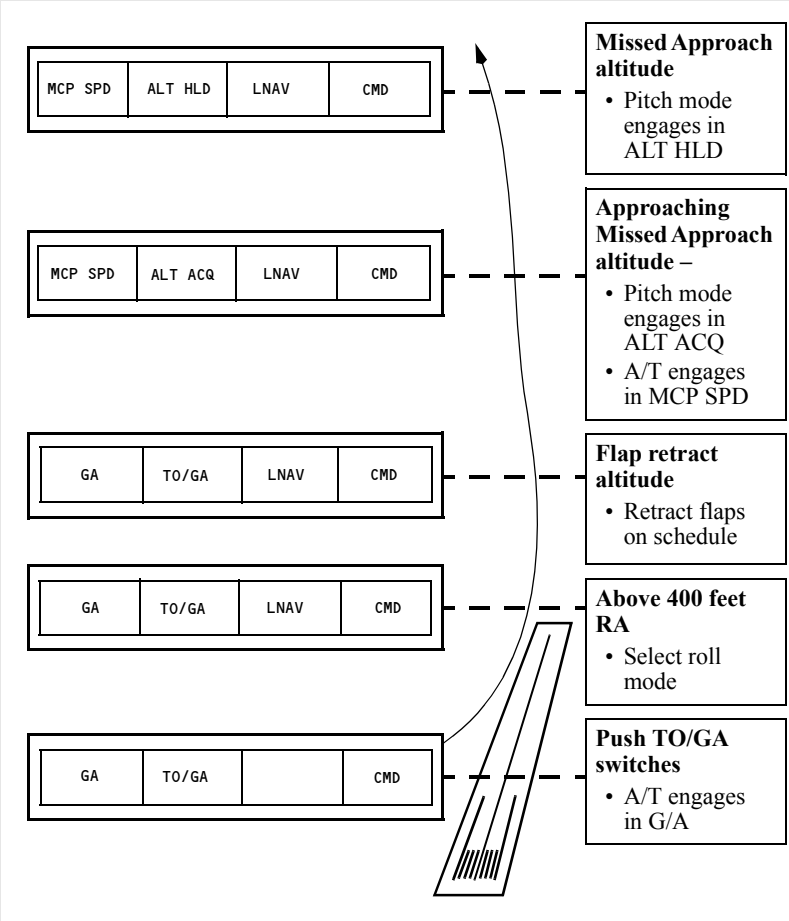

Copyright © The Boeing Company. See title page for details.

[Option - PFD/ND]

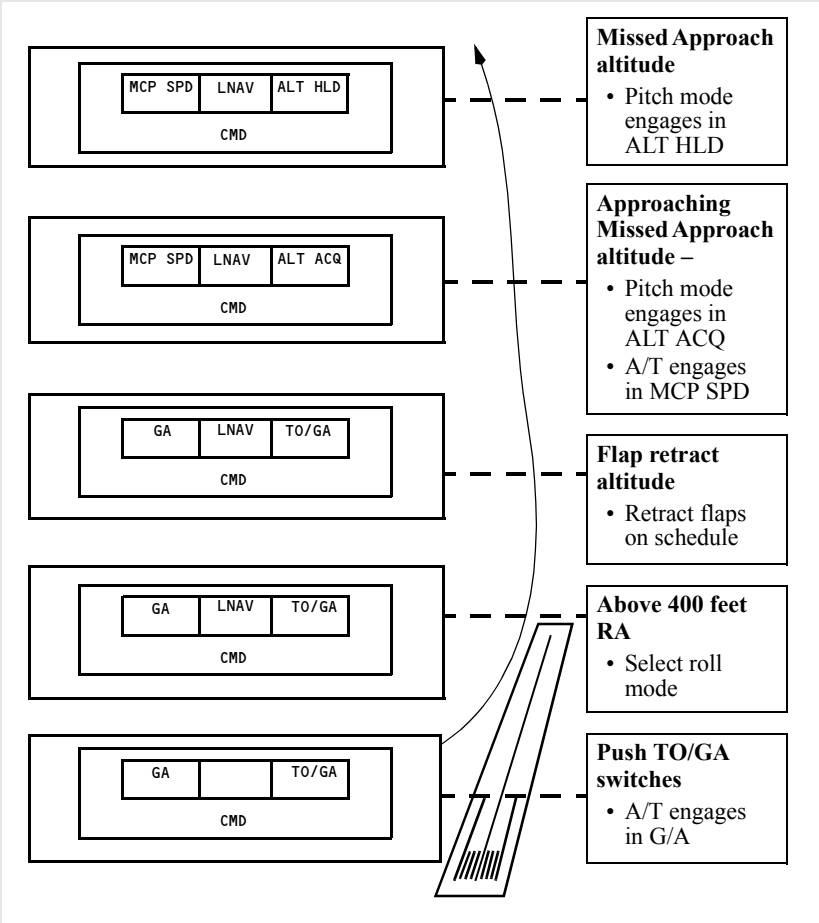

AFS Operation in Windshear

General

The autopilot and flight director provide positive corrective action to counteract most windshears. The autothrottle system also aids in windshear recovery by providing quick response to any increase or decrease in speed. The commanded levels of power may be beyond what the average pilot considers necessary but, in fact, are required by the situation.

Copyright © The Boeing Company. See title page for details.

Takeoff or Go–Around

If windshear is encountered during F/D takeoff or go–around, the F/D pitch command bar provides commands to maintain V2 + 20 kts until vertical speed decreases to approximately +600 fpm. At this point, the F/D pitch bar commands a 15 degree nose–up pitch attitude. If vertical speed continues to decrease, the F/D continues to command a 15 degree pitch attitude until a speed of approximately stick shaker is reached. It then commands pitch attitudes which result in intermittent activation of the stick shaker. As the airplane transits the windshear condition, the F/D programming reverses. As climb rate increases above approximately +600 fpm, the F/D commands pitch attitudes which result in acceleration back to V2 + 20 kts. The A/P and F/D both operate in a similar manner during A/P or F/D go–around.

Approach and Landing

If windshear is encountered during an ILS approach, both the F/D and A/P attempt to hold the airplane on altitude, or on glideslope after glideslope capture, without regard to angle of attack or stick shaker limitations. Airspeed could decrease below stick shaker and into a stall if the pilot does not intervene by pushing the TO/GA switch or disconnecting the A/P and flying manually.

WARNING: Although the F/D, A/P and A/T may be performing as previously described, severe windshear may exceed the performance capability of the system and/or the airplane. In this situation, the flight crew must, if necessary to avoid ground contact, be prepared to disconnect the autothrottle, advance thrust levers to the forward stop, disconnect the autopilot and manually fly the airplane.

Command Speed Limiting and Reversion Modes

AFS command limiting and reversion operation is independent of the stall warning and mach warning systems.

Command Speed Limiting

The AFS provides speed, pitch and thrust commands to avoid exceeding the following limit speeds:

- Vmo/Mmo
- wing flap placards
- landing gear placard
- minimum speed.

The commanded speed can be equal to, but does not exceed a limit speed.

Copyright © The Boeing Company. See title page for details.

Speeds greater than Vmo/Mmo cannot be selected from the MCP. Speeds can be selected which exceed flap and gear placards or are less than minimum speed.

Minimum speed is based on angle of attack and is approximately 1.3 Vs for the current flap configuration. It is sensed by the angle of attack vanes, one on either side of the forward fuselage.

If a speed greater than a placard speed, or less than minimum speed is selected, the AFS allows acceleration or deceleration to slightly short of the limit, then commands the limit speed. The overspeed or underspeed limiting symbol appears in the MCP IAS/Mach display when the commanded speed cannot be reached.

Either pitch or thrust, whichever is engaged in a speed mode, attempts to hold the limit speed. The commanded limit speed and MCP speed condition symbol, remain until another speed is selected which does not exceed the limit. A speed 15 knots greater than the minimum speed must be selected to remove the underspeed limiting symbol.

Reversion Modes

During some flight situations, speed control by the AFDS or A/T alone could be insufficient to prevent exceeding a limit speed. If this occurs, AFDS or A/T modes automatically revert to a more effective combination. The reversion modes are:

- placard limit reversion
- minimum airspeed reversion.

Mode reversion occurs slightly before reaching the limit speed. Both the AFDS and A/T have reversion modes which activate according to the condition causing the reversion.

Placard Limit Reversion

When one of the placard limit reversions (gear, flap or Vmo/Mmo) is reached, the overspeed limiting symbol appears in the MCP IAS/Mach display and the following occurs:

- if not in AFDS or A/T speed control and the A/T is armed, the A/T reverts to SPEED and controls speed to the placard limit
- if in AFDS or A/T speed control, no reversion is necessary. The AFDS or A/T, whichever is controlling speed, holds speed slightly below the placard limit
- if the A/T is not available, no reversion response to gear or flap placard speeds is available. The AFDS reverts to speed control for Vmo/Mmo speed limiting.

Copyright © The Boeing Company. See title page for details.

Minimum Speed Reversion

The AFDS and A/T do not control to a speed which is less than minimum speed for the current flap configuration. This speed is approximately 1.3 Vs. Minimum speed, FMC speed, or selected speed, whichever is higher, becomes the AFS commanded speed. If actual speed becomes equal to or slightly less than the minimum speed, the underspeed limiting symbol appears in the MCP IAS/Mach Display, and if operating in the V/S mode, the AFDS reverts to LVL CHG. The AFDS will also revert to LVL CHG from VNAV PTH, except when flying a level segment.

The AFS commands a speed 5 knots greater than minimum speed. Reaching a speed 5 knots greater than minimum speed reactivates normal MCP speed selection control. The AFDS commands nose down pitch to increase airspeed if the thrust levers are not advanced. When actual speed becomes 5 knots greater than minimum speed, the underspeed limiting symbol disappears.

The A/P disengages and the F/D command bars retract when in a LVL CHG climb with a command speed equal to minimum speed and a minimum rate of climb cannot be maintained without decelerating.

Minimum speed reversion is not available when the A/T is OFF and the AFDS is in ALT HOLD or after G/S capture. Minimum speed reversion is also not available when in VNAV PTH and flying a level segment.

Copyright © The Boeing Company. See title page for details.

Intentionally
Blank

Copyright © The Boeing Company. See title page for details.

DO NOT USE FOR FLIGHT

Controls and Indicators 5.10.1

VHF Communication Panel 5.10.1
Radio Tuning Panel. 5.10.2
HF Communication Panel. 5.10.4
Audio Control Panel (ACP) 5.10.6
Miscellaneous Communication Controls (Typical) 5.10.8
Interphone and Passenger Address Controls. 5.10.10
Cockpit Voice Recorder 5.10.11
Cockpit Voice Recorder Switch. 5.10.12
Call System 5.10.13

System Description 5.20.1

Introduction. 5.20.1
Audio Systems and Audio Control Panels 5.20.1
Speakers and Headsets 5.20.1
Microphones 5.20.2
Normal Audio System Operation 5.20.2
Degraded Audio System Operation 5.20.2
Flight Interphone System 5.20.3
Service (Attendant) Interphone System 5.20.3
Passenger Address System 5.20.3
Call System 5.20.4
VHF Communications 5.20.5
HF Communications 5.20.5
Cockpit Voice Recorder 5.20.6
ACARS System. 5.20.6

Copyright © The Boeing Company. See title page for details.

Intentionally
Blank

Copyright © The Boeing Company. See title page for details.

VHF Communication Panel

[Option - Typical VHF control panel with 8.33 khz frequency spacing]

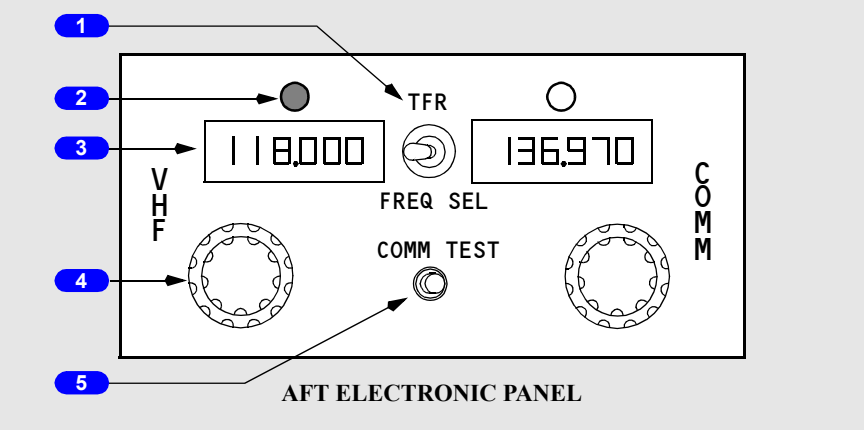

1 VHF Communications Transfer (TFR) Switch

Left – selects left frequency as active for transceiver.

Right – selects right frequency as active for transceiver.

2 Active Frequency Light

Illuminated (white)– indicates the related frequency is selected.

3 Frequency Indicator

Indicates selected frequency.

4 Frequency Selector

Rotate – selects frequency in related indicator:

- outer selector changes three left digits
- inner selector changes three right digits.

5 Communication Test (COMM TEST) Switch

Push –

- removes automatic squelch feature, permitting reception of background noise and thereby testing receiver operation
- improves reception of weak signals.

Copyright © The Boeing Company. See title page for details.

DO NOT USE FOR FLIGHT

Radio Tuning Panel

[Option -Typical radio tuning panel with 8.33 khz frequency spacing]

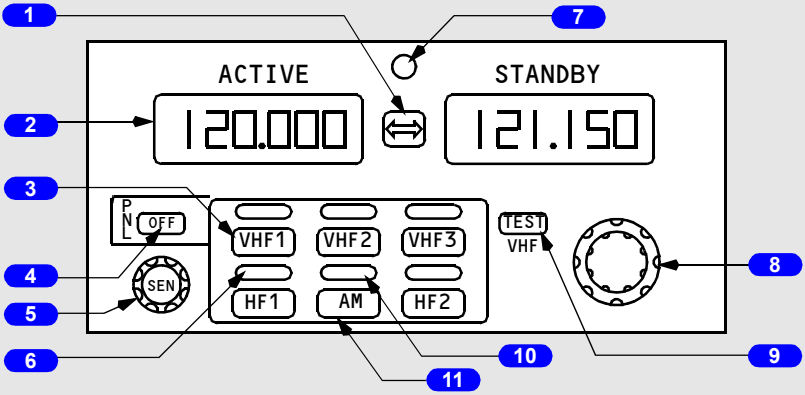

AFT ELECTRONIC PANEL

1 Frequency Transfer Switch

Push –

- transfers the STANDBY window frequency to the ACTIVE window and tunes the selected radio to the new active frequency
- transfers the ACTIVE window frequency to the STANDBY window.

2 Frequency Indicator

ACTIVE – displays the tuned frequency of the selected radio.

STANDBY – displays the preselected or previously tuned frequency of the selected radio

3 Radio Tuning Switch

Push –

- selects the VHF or HF radio to be tuned
- the tuned frequency is displayed in the ACTIVE frequency indicator
- the standby frequency is displayed in the STANDBY frequency indicator

4 Radio Tuning Panel Off (OFF) Switch

Push –

- disconnects the panel from the communication radios
- switch illuminates (white).

Copyright © The Boeing Company. See title page for details.

5 HF Sensitivity Control

Rotate – adjusts the sensitivity of the on–side HF receiver.

6 Radio Tuning Light

Illuminated (white) - indicates the selected radio.

7 Offside Tuning Light

Illuminated (white) –

- the radio normally associated with this panel is being tuned by another radio tuning panel, or
- the radio tuning panel is being used to tune a radio not normally associated with this radio tuning panel.

8 Frequency Selector

Rotate – selects frequency in the STANDBY frequency indicator:

- first digit is always 1
- outer selector changes second and third digits in 1 MHz increments
- inner selector changes fourth, fifth, and sixth digits in 8.33 KHz increments.

9 Communication (VHF) Test (TEST) Switch

Push –

- removes automatic squelch feature, permitting reception of background noise and thereby testing receiver operation
- improves reception of weak signals.

10 AM Light

Illuminated (white) – HF AM is selected.

Extinguished – HF USB is selected.

11 AM Switch

Push – sets the AM (amplitude modulation) or USB (upper side band) mode for the selected HF.

Copyright © The Boeing Company. See title page for details.

Radio Tuning Panel Fail Modes

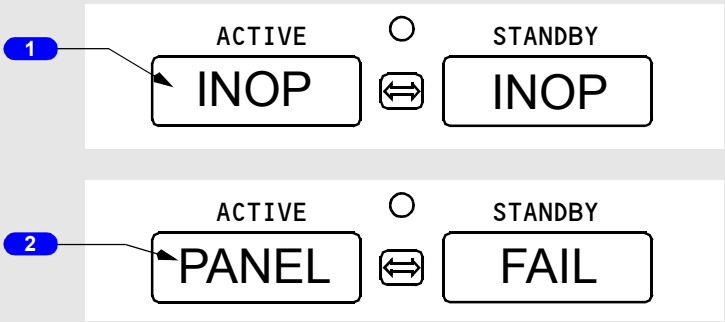

AFT ELECTRONIC PANEL

1 INOP Indication

The selected radio is not available.

2 PANEL FAIL

The radio tuning panel has failed.

Note: The selected frequencies may continue to be displayed in the frequency indicator when the radio is not available.

HF Communication Panel

[Option - Typical HF control panel]

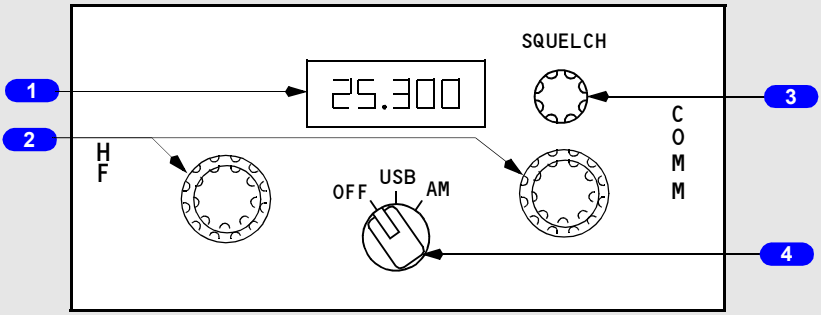

AFT ELECTRONIC PANEL

Copyright © The Boeing Company. See title page for details.

1 Frequency Indicator

Displays tuned frequency

Frequency ranges from 2.000 to 29.999 megahertz.

2 Frequency Selectors

Rotate - selects desired frequency.

3 SQUELCH Control

Rotate - controls sensitivity of receiver

- clockwise increases sensitivity of weak or distant stations
- counterclockwise decreases sensitivity to reduce noise or static.

4 Mode Selector

OFF - removes power to transceiver

USB (Upper Sideband) - transmits and receives on the higher side of the frequency

AM (Amplitude Modulation) - transmits and receives on the selected frequency, accompanied by a carrier wave.

Copyright © The Boeing Company. See title page for details.

Audio Control Panel (ACP)

[Option - Typical audio control panel with MASK/BOOM and ALT/NORM switches]

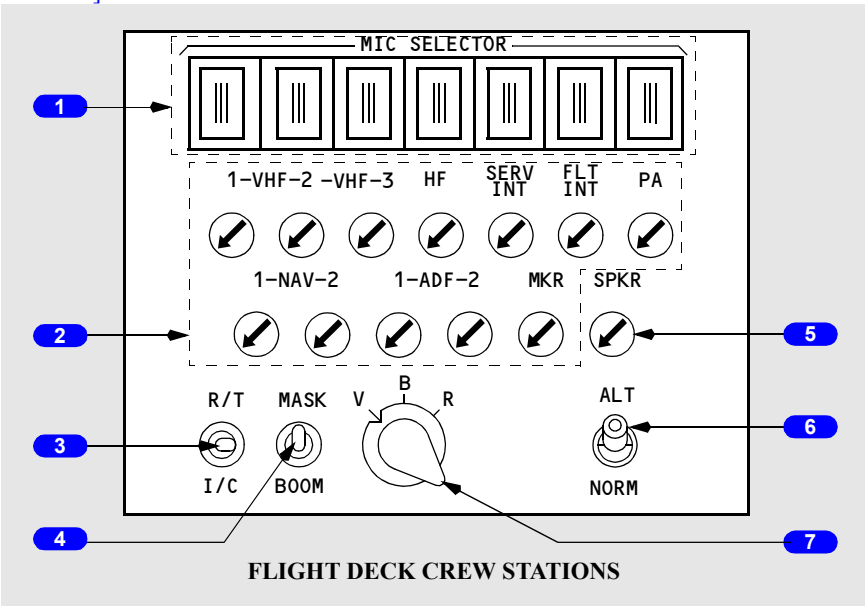

1 Transmitter Selector (MIC SELECTOR) Switches

Illuminated – related switch is active

Push –

- selects related communication system for subsequent transmission
- only one switch may be selected at a time; pushing a second switch deselects first switch
- reception possible over selected system regardless of whether related receiver switch is on.

2 Receiver Switches

Illuminated (white) – related switch is active

Rotate – adjusts volume

Push –

- allows reception of related communication system or navigation receiver
- multiple switches may be selected

Push again – deselects related system or receiver.

Copyright © The Boeing Company. See title page for details.

3 Push–to–Talk Switch

(spring–loaded to neutral position)

R/T (radio–transmit) – keys oxygen mask or boom microphone for transmission as selected by transmitter selector.

I/C (Intercom) – keys oxygen mask or boom microphone for direct transmission over flight interphone and bypasses transmitter selector.

4 MASK–BOOM Switch

MASK – selects oxygen mask microphone for transmissions.

BOOM – selects boom microphone for transmissions.

5 Speaker (SPKR) Switch

Illuminated (white) – SPKR switch is active.

Push – audio from selected receiver is heard on overhead speaker.

Rotate – adjusts overhead speaker volume.

Push again – deselects audio from selected receiver to be heard on overhead speaker.

6 Alternate–Normal (ALT–NORM) Switch

NORM (Normal) – ACP operates normally.

ALT (Alternate) – ACP operates in degraded mode.

7 Filter Switch

V (Voice) – receive NAV and ADF voice audio.

B (Both) – receive NAV and ADF voice and range audio.

R (Range) – receive NAV and ADF station identifier range (code) audio.

Copyright © The Boeing Company. See title page for details.

DO NOT USE FOR FLIGHT

Miscellaneous Communication Controls (Typical)

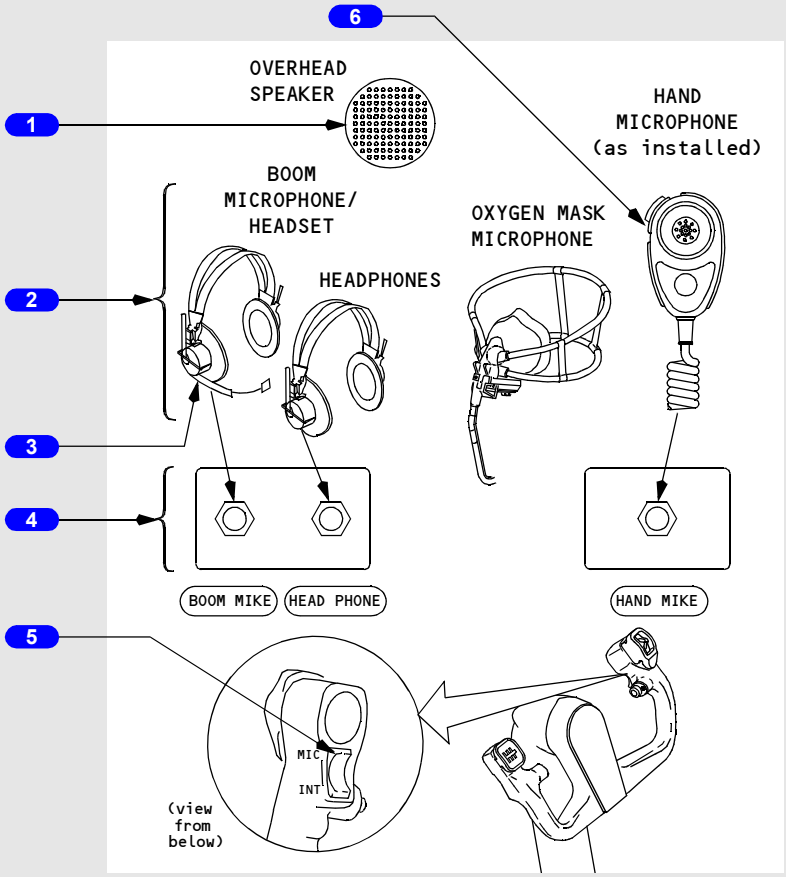

FLIGHT DECK CREW STATIONS

1 Overhead Speaker

Monitors audio from related pilot's ACP.

2 Headset or Headphones

Monitors audio from related ACP.

3 Standard Microphones

Choose desired microphone for voice transmission through selected radio, interphone system, or passenger address (PA).

Copyright © The Boeing Company. See title page for details.

4 Communication Jacks

Used for appropriate microphone or headphone plugs.

5 Push–To–Talk Switch

MIC (microphone) –

- selects oxygen mask or boom microphone for transmission, as selected by ACP transmitter selector.
- same as using ACP PTT switch (R/T position).

OFF – center position.

INT (interphone) –

- selects oxygen mask or boom microphone for direct transmission over flight interphone
- bypasses ACP transmitter selector
- same as using ACP PTT switch (I/C position)

6 Push–To–Talk Switch

Push – keys hand microphone for transmission, as selected by ACP transmitter selector.

Copyright © The Boeing Company. See title page for details.

DO NOT USE FOR FLIGHT

Interphone and Passenger Address Controls

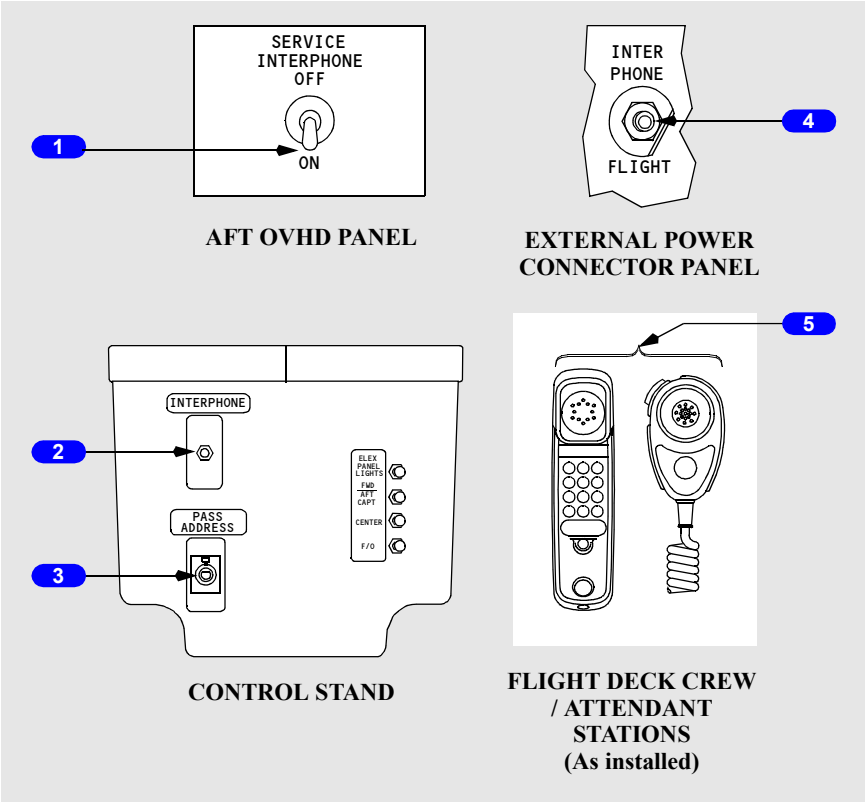

1 SERVICE INTERPHONE Switch

OFF –

- external jacks are deactivated
- communication between flight deck and flight attendants is still possible.

ON – adds external jacks to service interphone system.

2 Service INTERPHONE Handset Jack

With microphone installed, used to communicate with flight attendant stations:

- with SERVICE INTERPHONE switch ON, also used to communicate with any external jack location
- bypasses ACP.

Copyright © The Boeing Company. See title page for details.

3 Passenger Address (PASS ADDRESS) Hand Microphone Jack

With microphone installed:

- used to make PA announcements
- bypasses ACPs.

4 INTERPHONE FLIGHT Jack

Connects ground crew to flight interphone system.

5 Flight Deck / Attendant PA Hand Microphone

Used to make PA announcements.

Cockpit Voice Recorder

[Option - Typical]

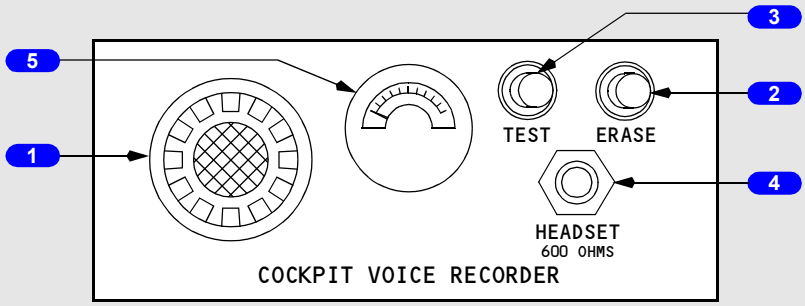

FORWARD OVERHEAD PANEL

1 Area Microphone

Active anytime 115V AC is applied to airplane.

2 ERASE Switch (red)

Push (2 seconds) –

- all four channels are erased
- monitor indicator momentarily deflects
- operative only when airplane is on ground and parking brake is set.

3 TEST Switch

Push – after a slight delay and no faults are detected:

- monitor indicator rises into green band
- a tone may be heard through a headset plugged into HEADSET jack.

Copyright © The Boeing Company. See title page for details.

4 HEADSET Jack

Headset may be plugged into jack to monitor tone transmission during test, or to monitor playback of voice audio.

5 Monitor Indicator

Pointer deflection indicates:

- during normal operation – system is recording
- during ERASE – erasure on all four channels (approximately a one second delay)
- during TEST – pointer rises into green band.

Cockpit Voice Recorder Switch

[Option]

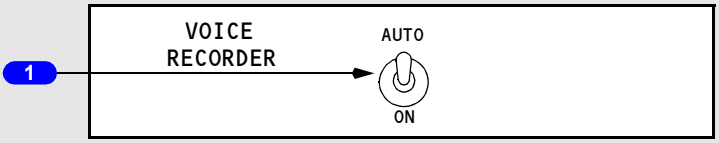

FORWARD OVERHEAD PANEL

1 VOICE RECORDER Switch

AUTO - powers the cockpit voice recorder from first engine start until 5 minutes after last engine shutdown

ON - powers the cockpit voice recorder until first engine start, then trips the switch to AUTO.

Copyright © The Boeing Company. See title page for details.

Call System

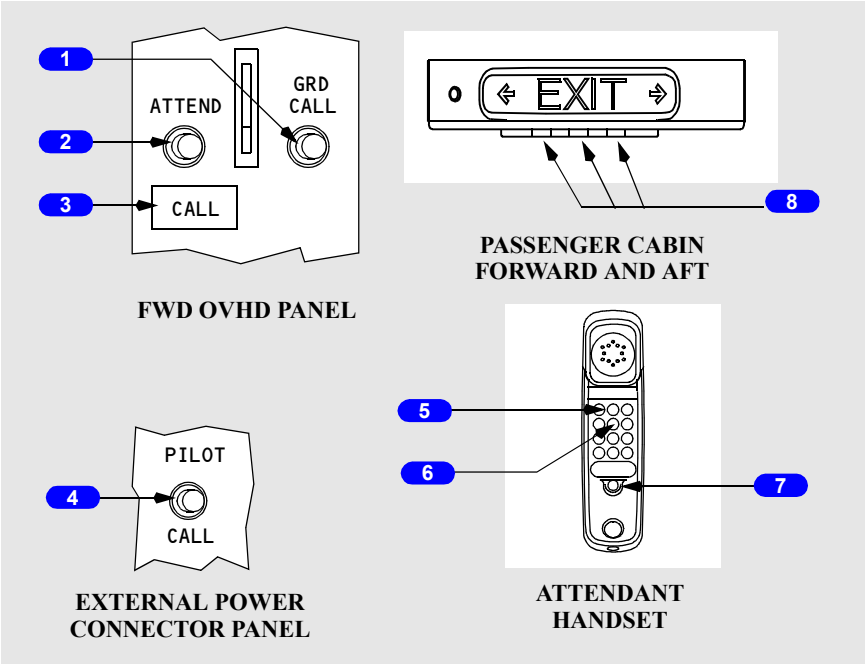

1 Ground Call (GRD CALL) Switch

Push – sounds a horn in nose wheel well until released.

2 Attendant Call (ATTEND) Switch

Push –

- sounds a two–tone chime in passenger cabin
- illuminates both pink master call lights.

3 Flight Deck CALL Light

Illuminated (blue) – flight deck is being called by flight attendants or ground crew.

4 PILOT CALL Switch

Push – sounds a single–tone chime in flight deck.

5 CAPTAIN Call Switch

Push – sounds a single–tone chime in flight deck.

Copyright © The Boeing Company. See title page for details.

6 ATTENDANT Call Switch

Push –

- sounds a two–tone chime in passenger cabin
- illuminates both pink master call lights.

7 Call RESET Switch

Push –

- extinguishes both pink master call lights
- cancels call
- disconnects the handset from the public address system.

8 Master Call Lights

Illuminated –

- amber – a lavatory call switch is activated or smoke is detected in a lavatory.
- pink – flight deck or other flight attendant station is calling.
- blue – a passenger seat call switch is activated.

Copyright © The Boeing Company. See title page for details.

Introduction

The communication system includes:

- radio communication system
- interphone communication system
- cockpit voice recorder system
- communication crew alerting system

The communication systems are controlled using the:

- audio control panels

[Option - Radio tuning panel]

- radio tuning panels

[Option - VHF or HF control panels]

- radio communication panels

Audio Systems and Audio Control Panels

An ACP is installed at the Captain, First Officer, and Observer stations. Each panel controls an independent crew station audio system and allows the crewmember to select the desired radios, navigation aids, interphones, and PA systems for monitoring and transmission.

Transmitter selectors on each ACP select one radio or system for transmission by that crewmember. Any microphone at that crew station may then be keyed to transmit on the selected system.

Receiver switches select the systems to be monitored. Any combination of systems may be selected. Receiver switches also control the volume for the headset and speaker at the related crew stations. Audio from each ACP is monitored using a headset/headphones or the related pilot's speaker.

Audio warnings for altitude alert, ground proximity warning, collision avoidance, and windshear are also heard through the speakers and headsets at preset volumes. They cannot be controlled or turned off by the crew.

Speakers and Headsets

Each crew station has a headset or headphone jack. The Captain and First Officer have speakers on the ceiling above their seats. There is no speaker at the observer station. Headset volume is controlled by the receiver switches. Speaker volume is controlled by the receiver switches and also the speaker switch.

Copyright © The Boeing Company. See title page for details.

Microphones

Hand microphones and boom microphones may be plugged into the related jacks at the flight deck crew stations. Each oxygen mask also has an integral microphone.

The MASK-BOOM switch allows selection of the oxygen mask microphone or the boom microphone. The MASK–BOOM switch does not affect the operation of the hand microphone.

Each hand microphone has a PTT switch to key the selected audio system. The PTT switches on the control wheel or ACP are used to key the oxygen mask or boom microphone, as selected by the R/T and I/C switch. The R/T and I/C switch does not affect the operation of the hand microphone.

Normal Audio System Operation

The Captain, First Officer, and Observer audio systems are located in a common remote electronics unit in the E/E compartment. They function independently and have separate circuit breakers. The audio systems are normally controlled by the related ACPs through digital or computerized control circuits.

Degraded Audio System Operation

If the remote electronics unit or ACP malfunctions, the ACP cannot control the remote electronics unit. Audio system operation can be switched to a degraded mode by placing the ALT–NORM switch to ALT. In this mode, the ACP at that station is inoperative and the crewmember can only communicate on one radio.

The ACP transmitter selectors are not functional. Any transmission from that station must be from the radio shown on the chart below. The transmitter selector for the usable radio illuminates when a station is operating in the degraded mode. The receiver switches are not functional, and only the usable radio is heard at a preset volume, through the headset. The speaker and speaker switch are not functional at that station. In addition, the flight interphone and service interphone cannot be used. The control wheel PTT switch INT position and the ACP PTT switch I/C position are not functional since the flight interphone is not functional.

The mask and boom microphones can be used for transmission on the usable radio. The MASK–BOOM switch works normally in the degraded mode. The mask and boom microphones can be keyed with the control wheel PTT switch MIC position or the ACP PTT switch R/T position. The hand microphone is not usable in the degraded mode of operation.

Audio warnings for altitude alert, GPWS, and windshear are not heard on an audio system operating in the degraded mode.

Copyright © The Boeing Company. See title page for details.

An audio system operating in the degraded mode cannot access the passenger address system through the audio control panel. The crewmember can still use the service interphone handset and PA microphone if they are installed on the control stand.

CREW STATION AUDIO SYSTEM IN DEGRADED MODE	RADIO AVAILABLE FOR TRANSMISSION AND RECEPTION AT DEGRADED STATION
CAPTAIN	VHF–1
FIRST OFFICER	VHF–2
OBSERVER	VHF–1

Flight Interphone System

The flight interphone system is an independent communication network. Its primary purpose is to provide private communication between flight deck crewmembers without intrusion from the service interphone system. The ground crew may also use the flight interphone through a jack at the external power receptacle.

The pilots can transmit directly over the flight interphone by using the control wheel PTT switch. Alternately, any crewmember with an ACP can transmit/receive over the flight interphone by using their related ACP and normal PTT switches. Any standard microphone may be used with the flight interphone system.

Service (Attendant) Interphone System

The service interphone system provides intercommunication between the flight deck, Flight Attendants, and ground personnel. Flight deck crewmembers communicate using either a separate handset (if installed) or their related ACP and any standard microphone.

The Flight Attendants communicate between flight attendant stations or with the flight deck using any of the attendant handsets. Anyone who picks up a handset/microphone is automatically connected to the system.

External jacks for use by maintenance or service personnel can be added to the system by use of the service interphone switch.

Passenger Address System

The passenger address (PA) system allows flight deck crewmembers and flight attendants to make announcements to the passengers. Announcements are heard through speakers located in the cabin and in the lavatories.

Copyright © The Boeing Company. See title page for details.

The flight deck crewmembers can make announcements using a PA handset or by using any standard microphone and the related ACP. Flight Attendants make announcements using PA handset located at their stations. The attendants use the PA to play recorded music for passenger entertainment.

PA system use is prioritized. Flight deck announcements have first priority and override all others. Flight Attendant announcements override the music system.

Call System

The call system is used as a means for various crewmembers to gain the attention of other crewmembers and to indicate that interphone communication is desired. Attention is gained through the use of lights and aural signals (chimes or horn). The system can be activated from the flight deck, either flight attendant station, or from the external power receptacle. Passengers may also use the system to call an attendant, through the use of individual call switches at each seat.

The flight deck may be called from either flight attendant station or by the ground crew. The ground crew may only be called from the flight deck. Flight Attendants may be called from the flight deck, the other attendant station, or from any passenger seat or lavatory. Master call lights in the passenger cabin identify the source of incoming calls to the attendants.

Call system chime signals are audible in the passenger cabin through the PA system speakers. The PA speakers also provide an alerting chime signal whenever the NO SMOKING or FASTEN SEAT BELT signs illuminate or extinguish.

Location of Call Originator	Called Position	Visual Signal at Called Position	Aural Signal at Called Position
Flight deck	Attendant station	Pink master call light	Two–tone chime
Flight deck	Nose wheel well		Horn in nose wheel well
Attendant station	Flight deck	Blue flight deck call light	Single high–tone chime
Nose wheel well	Flight deck	Blue flight deck call light	Single high–tone chime
Flight deck	Passenger cabin	NO SMOKING or FASTEN BELT signs illuminate/ extinguish	Single low–tone chime

Copyright © The Boeing Company. See title page for details.

VHF Communications

Primary short–range voice communications is provided in the VHF range by three independent radios. Each radio provides for selection of an active frequency and an inactive (preselected) frequency. Voice transmission and reception are controlled at the related ACP.

[Option -Typical VHF control panel equipped airplanes]
VHF–1 control panel is located on the left side of the aft electronic panel, VHF–2 control panel is on the right and VHF–3 control panel is in the center. The VHF–2 and VHF-3 antennae are located on the lower fuselage, VHF–1 is on the upper fuselage.

[Option - Typical for radio tuning panel equipped airplanes]
The VHF/HF RTP-1 is located on the forward left side of the aft electronic panel, VHF/HF RTP–2 is on the forward right side and VHF/HF RTP–3 is on the aft portion of the panel. The VHF–2 and VHF-3 antennae are located on the lower fuselage, VHF–1 is on the upper fuselage.

Note: VHF antennae located on the lower fuselage are susceptible to multipath interference from nearby structures or vehicles. This may disrupt VHF communications. VHF antennae located on the upper fuselage are not as susceptible to this interference.

HF Communications

[Option - Typical for radio tuning panel equipped airplanes]
The HF communication radio can be tuned by any radio tuning panel. HF radio sensitivity can only be set on the on-side radio tuning panel.

[Option - Typical for HF control panel equipped airplanes]
The HF radio communications control panel allows for frequency selection and adjustment of radio sensitivity.

The audio control panels are used to control voice transmission and receiver monitoring. When an HF transmitter is keyed after a frequency change, the antenna tunes. While the antenna is being tuned, a steady or intermittent tone may be heard through the audio system (tuning takes a maximum of 15 seconds). The antenna is located in the vertical stabilizer.

Copyright © The Boeing Company. See title page for details.

Cockpit Voice Recorder

The cockpit voice recorder uses four independent channels to record flight deck audio for 120 minutes. Recordings older than 120 minutes are automatically erased. One channel records flight deck area conversations using the area microphone. The other channels record individual ACP output (headset) audio and transmissions for the pilots and observer.

ACARS System

The ARINC Communications Addressing and Reporting System (ACARS) is an addressable digital data link system which permits exchange of data and messages between an airplane and a ground-based operation center utilizing an onboard VHF communications system.

The ACARS airborne subsystem provides for the manual entry of routine data such as departure/arrival information. Also possible is manual entry of addresses (telephone codes) of parties on the ground for voice communications.

The airborne system consists of a management unit in the E/E compartment, either a interactive display unit or multipurpose control display unit (MCDU), and frequently a printer. Data is entered and transmitted to the ground operations center.

Copyright © The Boeing Company. See title page for details.

DO NOT USE FOR FLIGHT

Controls and Indicators 6.10.1

AC and DC Metering Panel 6.10.1

Generator Drive and Standby Power Panel. 6.10.5

Ground Power Panel and Bus Switching Panel 6.10.7

Ground Service Switch 6.10.9

System Description 6.20.1

Introduction. 6.20.1

Electrical Power Generation 6.20.2

Engine Generators 6.20.2

APU Generator 6.20.2

External Ground Power 6.20.2

Ground Service 6.20.2

Electrical Power Schematic 6.20.3

AC Power System. 6.20.5

Bus Tie System 6.20.5

Automatic Load Shedding (Engine Generators) 6.20.6

APU Automatic Load Shedding 6.20.6

AC Power Schematic. 6.20.7

Electrical Power Controls and Monitoring 6.20.8

Generator Drive 6.20.8

AC Voltmeter, Ammeter and Frequency Meter. 6.20.8

DC Voltmeter and Ammeter 6.20.8

Electrical Power Controls and Monitoring Schematic 6.20.9

DC Power System. 6.20.11

Transformer Rectifier Units. 6.20.11

Battery Power 6.20.11

Battery Charger Transformer/Rectifier 6.20.12

DC Power System Schematic 6.20.14

Standby Power System 6.20.16

Copyright © The Boeing Company. See title page for details.

Normal Operation. 6.20.16
Alternate Operation 6.20.16
Static Inverter 6.20.17
Standby Power System Schematic 6.20.18
All Generators Inoperative 6.20.20
Basic Equipment Operating – Captain Instrument Panel 6.20.22
Basic Equipment Operating – First Officer Instrument Panel 6.20.23

Copyright © The Boeing Company. See title page for details.

AC and DC Metering Panel

[Option - Single battery with CAB/UTIL switch]

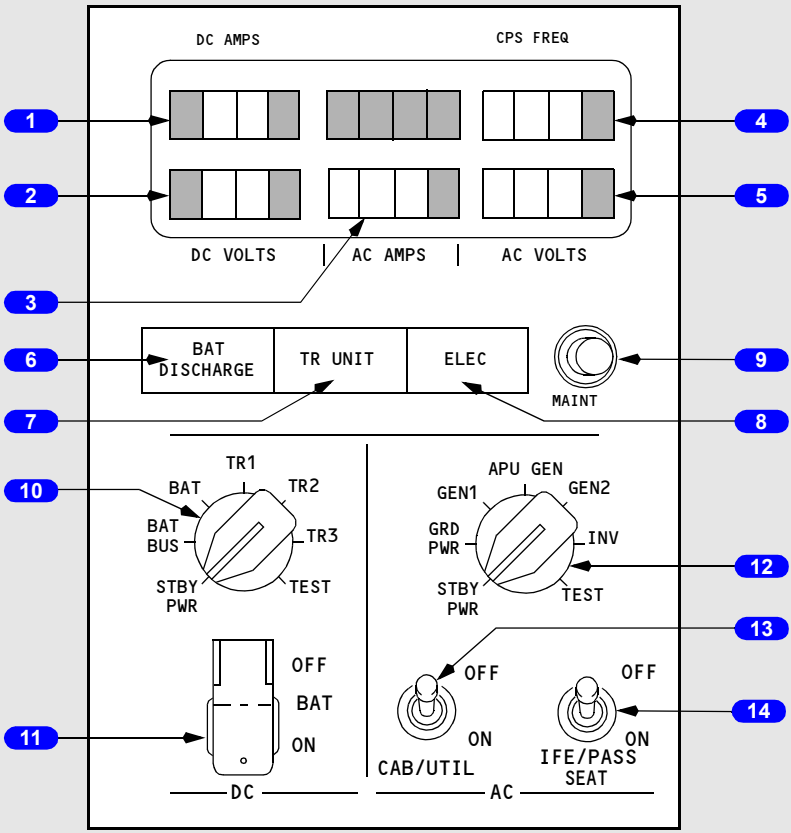

FORWARD OVERHEAD PANEL

Copyright © The Boeing Company. See title page for details.

DO NOT USE FOR FLIGHT

[Option - Dual battery with CAB/UTIL switch]

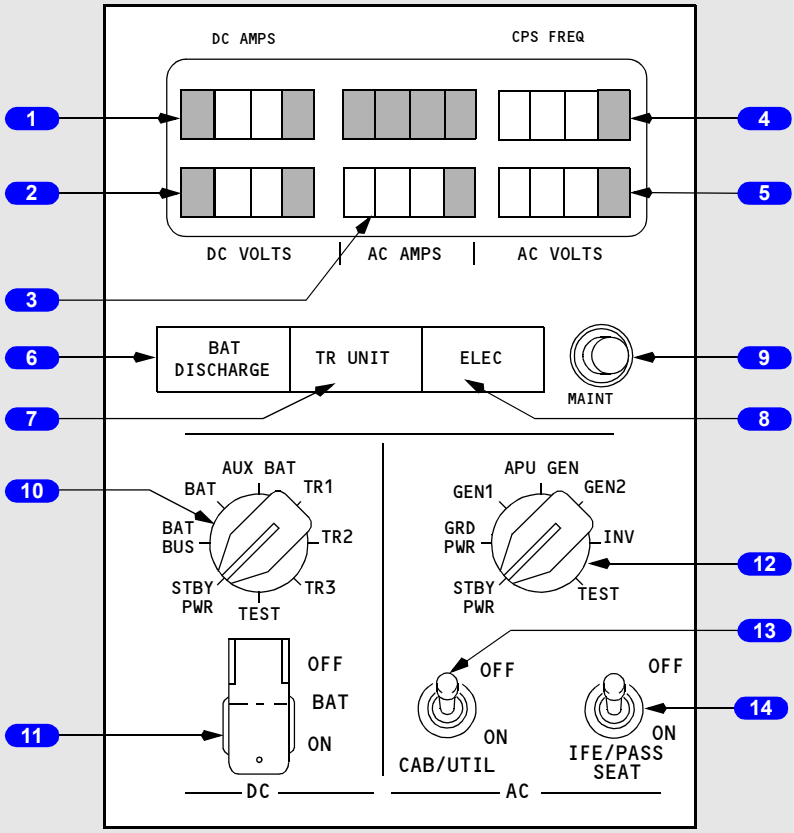

FORWARD OVERHEAD PANEL

1 DC Ammeter

Indicates amperage of source selected by DC meters selector.

2 DC Voltmeter

Indicates voltage of source selected by DC meters selector.

3 AC Ammeter

Indicates amperage of source selected by AC meters selector.

4 Frequency Meter

Indicates frequency of source selected by AC meters selector.

Copyright © The Boeing Company. See title page for details.

5 AC Voltmeter

Indicates voltage of source selected by AC meters selector.

6 Battery Discharge (BAT DISCHARGE) Light

Illuminated (amber) – with BAT switch ON, excessive battery discharge detected.

7 TR UNIT Light

Illuminated (amber) –

- on the ground – any TR has failed.
- in flight –
  - TR1 failed; or
  - TR2 and TR3 failed.

8 Electrical (ELEC) Light

Illuminated (amber) – a fault exists in DC power system or standby power system.

Note: Operates only with airplane on ground.

9 Maintenance Test (MAINT) Switch

Used by maintenance.

10 DC Meters Selector

Selects DC source for DC voltmeter and DC ammeter indications.

TEST – used by maintenance.

11 Battery (BAT) Switch

OFF –

- removes power from battery bus and switched hot battery bus when operating with normal power sources available
- removes power from battery bus, switched hot battery bus, DC standby bus, static inverter, and AC standby bus when battery is only power source.

ON (guarded position) –

- provides power to switched hot battery bus
- energizes relays to provide automatic switching of standby electrical system to battery power with loss of normal power.

12 AC Meters Selector

Selects AC source for AC voltmeter, AC ammeter and frequency meter indications

Copyright © The Boeing Company. See title page for details.

TEST – used by maintenance.

13 CAB/UTIL Switch

OFF – removes electrical power from cabin recirculation fan, fwd & aft door area heaters, drain mast heaters, lavatory water heaters, all 115V AC galley busses, logo lights, potable water compressor, and 115V AC shaver outlets when installed.

ON – supplies electrical power to recirculation fan, fwd & aft door area heaters, drain mast heaters, lavatory water heaters, all 115V AC galley busses, logo lights, potable water compressor, and 115V AC shaver outlets when installed.

13 CAB/UTIL Switch

OFF – removes electrical power from left & right recirculation fans, fwd & aft door area heaters, drain mast heaters, lavatory water heaters, all 115V AC galley busses, logo lights, potable water compressor, and 115V AC shaver outlets when installed.

ON – supplies electrical power to left & right recirculation fans, fwd & aft door area heaters, drain mast heaters, lavatory water heaters, all 115V AC galley busses, logo lights, potable water compressor, and 115V AC shaver outlets when installed.

14 IFE/PASS SEAT Switch

OFF – removes electrical power from installed components of the passenger seats and in-flight entertainment systems including: 115V AC audio entertainment equipment, 115V AC video entertainment equipment, cabin telephone equipment, FAX machine, printer, 28V DC video equipment and passenger seat electronic outlets.

ON – supplies electrical power to installed components of the passenger seats and in-flight entertainment systems including: 115V AC audio entertainment equipment, 115V AC video entertainment equipment, cabin telephone equipment, FAX machine, printer, 28V DC video equipment and passenger seat electronic outlets.

Copyright © The Boeing Company. See title page for details.

Generator Drive and Standby Power Panel

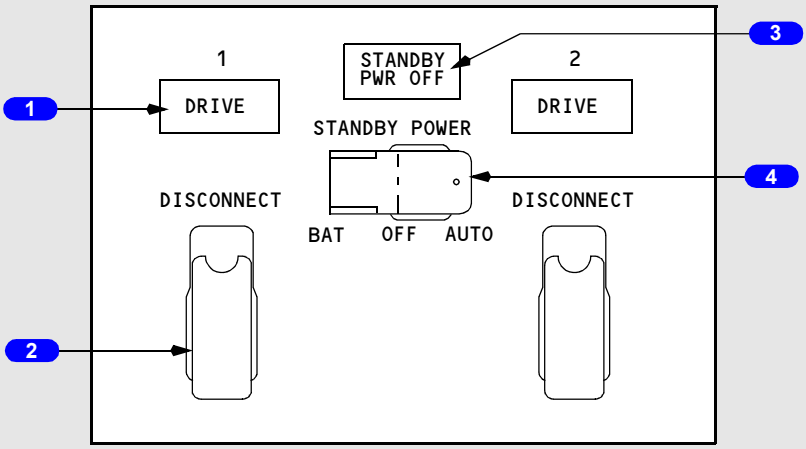

FORWARD OVERHEAD PANEL

1 Generator Drive (DRIVE) Lights

Illuminated (amber) – Integrated drive generator (IDG) low oil pressure caused by one of the following:

- IDG failure
- engine shutdown
- IDG automatic disconnect due to high oil temperature
- IDG disconnected through generator drive DISCONNECT switch.

2 Generator Drive Disconnect (DISCONNECT) Switches (guarded)

Disconnects IDG if electrical power is available and engine start lever is in IDLE. IDG cannot be reconnected in the air.

3 STANDBY Power Off (PWR OFF) Light

Illuminated (amber) – one or more of the following busses are unpowered:

- AC standby bus
- DC standby bus
- battery bus.

Copyright © The Boeing Company. See title page for details.

4 STANDBY POWER Switch

AUTO (guarded position) –

- In flight, or on the ground, and AC transfer busses powered:
  - AC standby bus is powered by AC transfer bus 1
  - DC standby bus is powered by TR1 and TR2. TR3 is a backup source
- In flight, or on the ground, loss of all AC power
  - AC standby bus is powered by battery through static inverter
  - DC standby bus is powered by battery.

OFF (center position) –

- STANDBY PWR OFF light illuminates
- AC standby bus, static inverter, and DC standby bus are not powered.

BAT (unguarded position) –

- AC standby bus is powered by battery through static inverter
- DC standby bus and battery bus are powered directly by battery.

Copyright © The Boeing Company. See title page for details.

Ground Power Panel and Bus Switching Panel

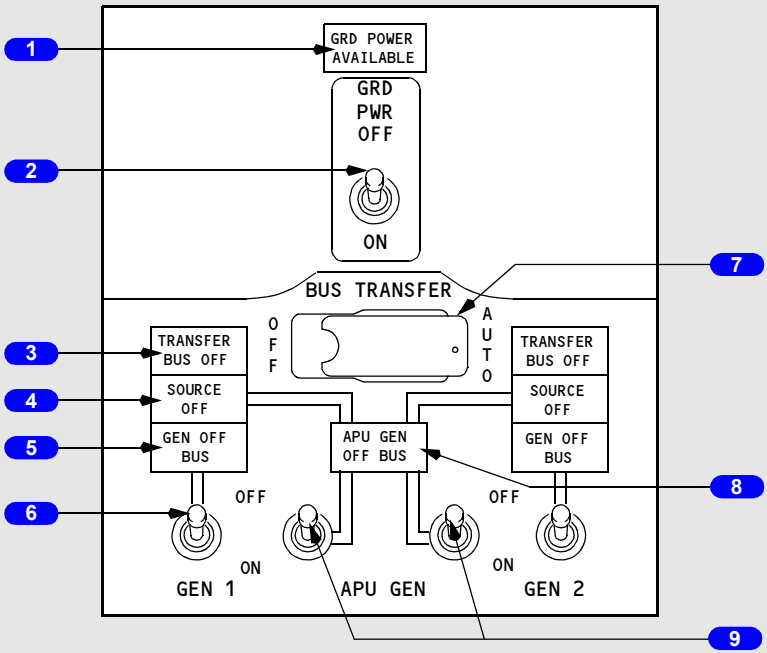

FORWARD OVERHEAD PANEL

1 Ground Power Available (GRD POWER AVAILABLE) Light

Illuminated (blue) – ground power is connected and meets airplane power quality standards.

2 Ground Power (GRD PWR) Switch

Three position switch, spring–loaded to neutral

OFF – disconnects ground power from AC transfer busses.

ON – if momentarily moved to ON position and ground power is available:

- removes previously connected power from AC transfer busses
- connects ground power to AC transfer busses if power quality is correct.

3 TRANSFER BUS OFF Lights

Illuminated (amber) – related transfer bus is not powered.

Copyright © The Boeing Company. See title page for details.

4 SOURCE OFF Lights

Illuminated (amber) – no source has been manually selected to power the related transfer bus, or the manually selected source has been disconnected

- if a source has been selected to power the opposite transfer bus, both transfer busses are powered.

5 Generator Off Bus (GEN OFF BUS) Lights

Illuminated (blue) – IDG is not supplying power to the related transfer bus.

6 Generator (GEN) Switches

Three position switch, spring–loaded to neutral.

OFF – disconnects IDG from related AC transfer bus by opening generator circuit breaker.

ON – connects IDG to related AC transfer bus by disconnecting previous power source and closing generator circuit breaker,

7 BUS TRANSFER Switch

AUTO (guarded position) – BTBs operate automatically to maintain power to AC transfer busses from any operating generator or external power

- DC cross tie relay automatically provides normal or isolated operation as required.

OFF – isolates AC transfer bus 1 from AC transfer bus 2 if one IDG is supplying power to both AC transfer busses

- DC cross tie relay opens to isolate DC bus 1 from DC bus 2.

8 APU Generator Off Bus (GEN OFF BUS) Light

Illuminated (blue) – APU is running and not powering a bus.

9 APU Generator (GEN) Switches

Three position switch, spring–loaded to neutral.

OFF –

- APU generator powering both AC transfer busses
  - moving a single APU GEN switch to OFF illuminates related SOURCE OFF light. APU continues to power AC transfer busses
  - subsequently moving other APU GEN switch to OFF disconnects APU generator from tie bus and removes APU power from AC transfer busses
- APU generator powering one AC transfer bus; IDG powering one AC transfer bus

Copyright © The Boeing Company. See title page for details.

- moving related APU GEN switch to OFF disconnects APU generator from tie bus and AC transfer bus. IDG powers AC transfer busses.

ON –

- Neither AC transfer bus powered by IDG – moving a single APU GEN switch to ON:
  - connects both AC transfer busses to the APU generator
  - disconnects external power, if connected
  - opposite SOURCE OFF light illuminates until the other APU GEN switch is moved to ON.
- Both AC transfer busses powered by IDGs – moving an APU GEN switch ON:
  - powers the related AC transfer bus from the APU generator
  - other AC transfer bus continues to receive power from the IDG.

Ground Service Switch

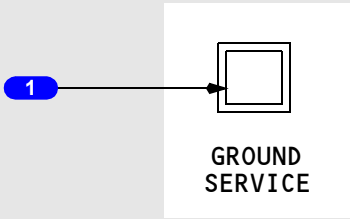

FWD ATTENDANT PANEL

1 GROUND SERVICE Switch

Momentary push–button switch.

Provides manual control of ground service busses. Enables servicing airplane using external power without activating AC transfer busses.

Illuminated (white) –

- ON – connects external power to ground service busses
- OFF – disconnects external power from ground service busses.

Copyright © The Boeing Company. See title page for details.

Intentionally
Blank

Copyright © The Boeing Company. See title page for details.

Introduction

Single Battery
[Option]

Primary electrical power is provided by two engine integrated drive generators (IDGs) which supply three-phase, 115 volt, 400 cycle alternating current. Each IDG supplies its own bus system in normal operation and can also supply essential and non-essential loads of the opposite side bus system when one IDG is inoperative. Transformer rectifier (TR) units and a battery/battery charger supply DC power. The battery also provides backup power for the AC and DC standby system. The APU operates a generator and can supply power to both AC transfer busses on the ground or in flight.

There are two basic principles of operation for the 737 electrical system:

- There is no paralleling of the AC sources of power.
- The source of power being connected to a transfer bus automatically disconnects an existing source.

The electrical power system may be categorized into three main divisions: the AC power system, the DC power system, and the standby power system.

Dual Battery
[Option]

Primary electrical power is provided by two engine integrated drive generators (IDGs) which supply three-phase, 115 volt, 400 cycle alternating current. Each IDG supplies its own bus system in normal operation and can also supply essential and non-essential loads of the opposite side bus system when one IDG is inoperative. Transformer rectifier (TR) units and the main battery/battery charger supply DC power. The main and auxiliary batteries also provide backup power for the AC and DC standby system. The APU operates a generator and can supply power to both AC transfer busses on the ground or in flight.

There are two basic principles of operation for the 737 electrical system:

- There is no paralleling of the AC sources of power.
- The source of power being connected to a transfer bus automatically disconnects an existing source.

The electrical power system may be categorized into three main divisions: the AC power system, the DC power system, and the standby power system.

Copyright © The Boeing Company. See title page for details.

Electrical Power Generation

Engine Generators

Primary power is obtained from two engine IDGs. The IDG maintains a constant generator speed throughout the normal operating range of the engine. An integral electro–mechanical disconnect device provides for complete mechanical isolation of the IDG.

APU Generator

The APU generator can supply power to both AC transfer busses on the ground or in flight. As the only power source, the APU generator can meet electrical power requirements for all ground conditions and most flight conditions.

External Ground Power

An external AC power receptacle located near the nose gear wheel well, on the lower right side of the fuselage, allows the use of an external power source. Status lights on a panel adjacent to the receptacle permit the ground crew to determine if external power is being used. When connected, external power can supply power to both transfer busses.

Ground Service

For ground servicing, a ground service switch is on the forward attendant's panel. The switch provides ground power directly to the AC ground service busses for utility outlets, cabin lighting and the battery charger without powering all airplane electrical busses. The ground service switch is a momentary push button and is overridden when both AC transfer busses are powered.

Copyright © The Boeing Company. See title page for details.

Electrical Power Schematic

[Option - Single battery]

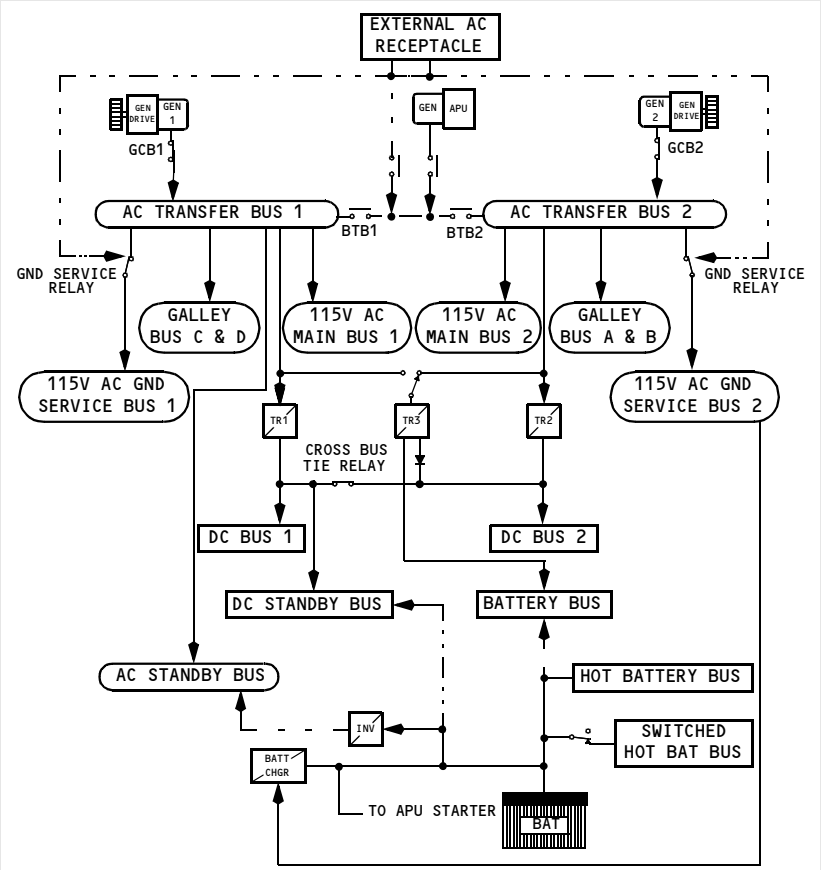

Copyright © The Boeing Company. See title page for details.

[Option – Dual battery]

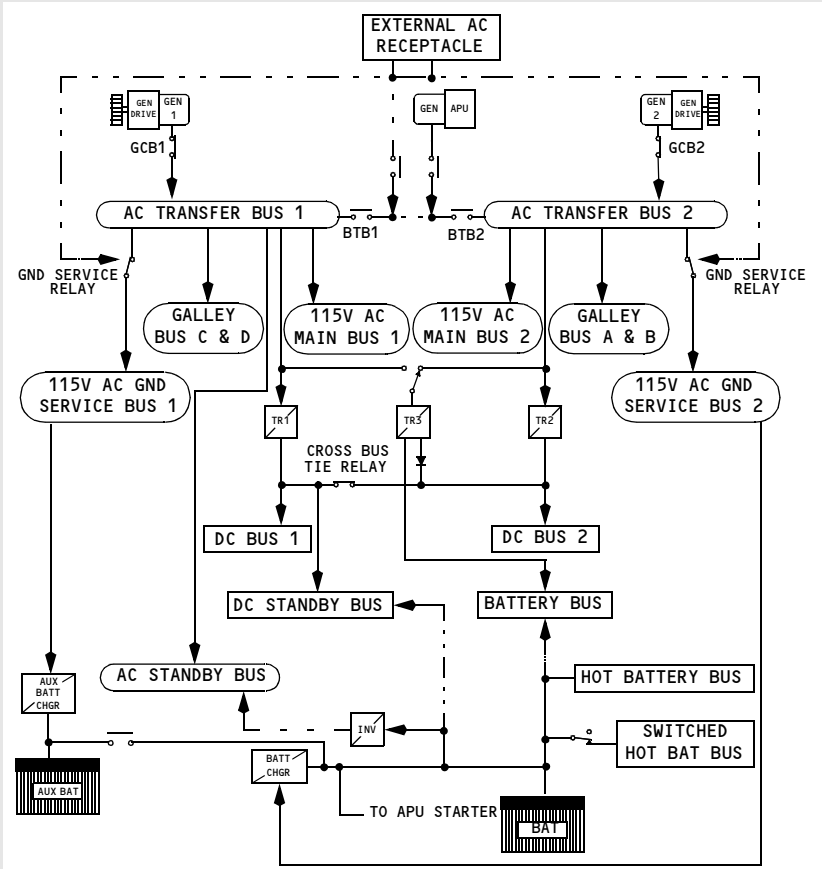

Airplane Configuration – In Flight
Battery Switch – ON
Standby Power Switch – AUTO
Bus Transfer Switch – AUTO
ENGINE GENERATOR CONNECTED TO RELATED BUS

Copyright © The Boeing Company. See title page for details.

AC Power System

Each AC power system consists of a transfer bus, a main bus, two galley busses, and a ground service bus. Transfer bus 1 also supplies power to the AC standby bus. If the AC source powering either transfer bus fails or is disconnected, the transfer bus can be powered by any available source through the tie bus with the bus tie breakers (BTBs).

With the airplane on the ground and both generator control switches OFF, or with both engines shut down, selecting the GRD PWR switch ON connects external power to both transfer busses. Likewise, selecting either APU GEN switch ON connects APU power to both transfer busses. Whichever source is selected last powers both busses. It is not possible to power one transfer bus with external power and one transfer bus with APU power.

The transfer busses can be powered from the engine generators by momentarily positioning the related generator switch to ON. This closes the related generator circuit breaker (GCB) and connects the generator to the transfer bus. Whenever external power or APU is powering both transfer busses, and engine generator power is applied to its onside transfer bus, external power or APU continues to supply power to the remaining transfer bus.

In flight, each engine generator normally powers its own transfer bus. If an engine generator is no longer supplying power, the BTBs automatically close to allow the other engine generator to supply both transfer busses through the tie bus and BTBs. The APU can power either or both busses through the BTBs.

The system also incorporates an automatic generator on–line feature in case the airplane takes off with the APU powering both transfer busses. If the APU is either shut down or fails, the engine generators are automatically connected to their related transfer busses. This action occurs only once in flight and only under the circumstances described above.

Bus Tie System

Either generator or the APU can supply power to both transfer busses. If the BUS TRANS switch is in the AUTO position and the source powering the transfer bus is disconnected or fails, the source powering the opposite transfer bus automatically picks up the unpowered transfer bus through the BTBs.

Copyright © The Boeing Company. See title page for details.

Automatic Load Shedding (Engine Generators)

[Option - CAB/UTIL Power Switch]
For single generator operation, the system is designed to shed electrical load incrementally based on actual load sensing. The galleys and main bus on transfer bus 2 are shed first; if an overload is still sensed, the galleys and main bus on transfer bus 1 are shed; if overload still exists, the IFE buses are shed. When configuration changes to more source capacity (two generator operation), automatic load restoration of the main busses, galley busses and IFE buses occurs; manual restoration of galley and main bus power can be attempted by moving the CAB/UTIL Power Switch to OFF, then back ON.

APU Automatic Load Shedding

[Option - CAB/UTIL Power Switch]
In flight, if the APU is the only source of electrical power, all galley busses and main buses are automatically shed. If electrical load still exceeds design limits, both IFE busses are also automatically shed. On the ground, the APU attempts to carry a full electrical load. If an overload condition is sensed, the APU sheds galley busses and main busses until the load is within limits. Manual restoration of galley and main bus power can be attempted by moving the CAB/UTIL Power Switch to OFF, then back ON.

Copyright © The Boeing Company. See title page for details.

AC Power Schematic

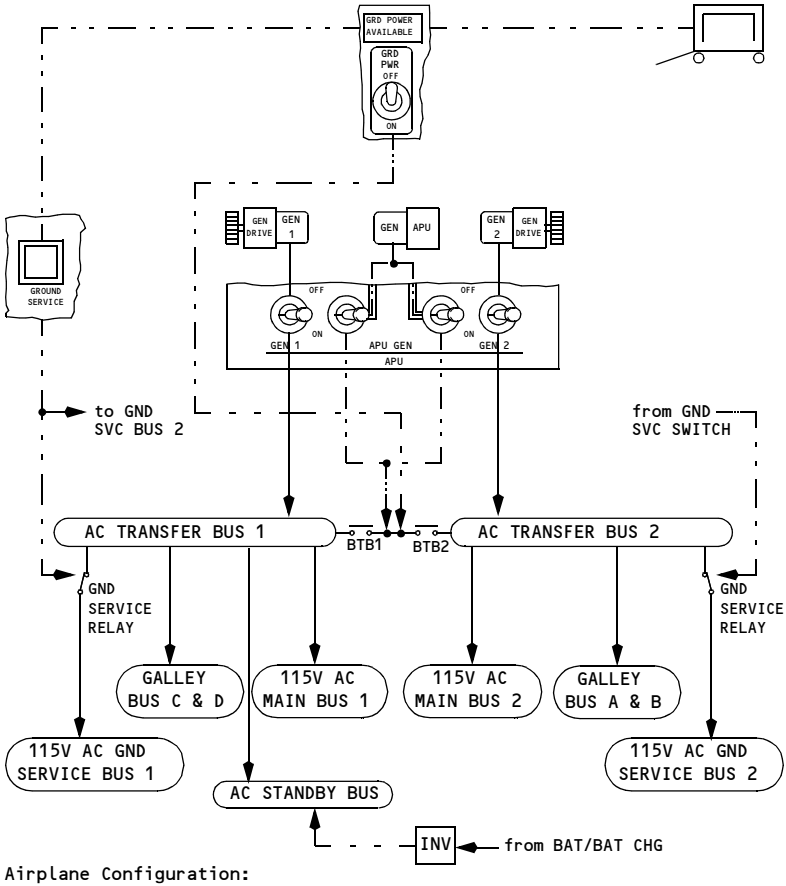

Airplane Configuration:
Battery Switch – ON
Standby Power Switch – AUTO
Bus Transfer Switch – AUTO
ENGINE GENERATOR CONNECTED TO RELATED BUS

Copyright © The Boeing Company. See title page for details.

Electrical Power Controls and Monitoring

Generator Drive

The IDGs contain the generator and drive in a common housing, and are lubricated and cooled by a self–contained oil system. An integral electro–mechanical disconnect device provides for complete mechanical isolation of the IDG.

The generator drive (DRIVE) amber caution light is illuminated when low oil is sensed in the IDG. IDG low oil pressure is caused by one of the following:

- IDG failure
- engine shutdown
- IDG automatic disconnect due to high oil temperature
- IDG disconnected through generator drive DISCONNECT switch.

A generator drive disconnect switch is installed. This switch disconnects the generator from the engine in the event of a generator drive malfunction. Reactivation of the generator may be accomplished only on the ground by maintenance personnel.

AC Voltmeter, Ammeter and Frequency Meter

AC voltage and frequency may be read on the AC voltmeter and frequency meter for standby power, ground power, generator No. 1, APU generator, generator No. 2 and the static inverter. Frequency is indicated only when the generator is electrically excited. The voltage regulator automatically controls the generator output voltage.

Current readings for the two engine IDGs and the APU generator may be read on the AC ammeter.

The TEST position is used by maintenance and connects the voltage and frequency meter to the power systems test module for selection of additional reading points.

Normal indications are:

- AC voltmeter – 115 +/- 5volts
- Frequency meter – 400 CPS +/- 10 CPS.

Note: Normal AC voltmeter indication for the APU generator with the AC busses loaded: 110 - 125 volts.

DC Voltmeter and Ammeter

DC voltage and amperage may be read on the DC voltmeter and ammeter for the battery and each of the three TRs. The standby power and battery bus displays only DC voltage.

Copyright © The Boeing Company. See title page for details.

Normal indication is 26 +/- 4 volts. During primary charge cycle operation battery voltage can be as high as 30 +/- 3 volts.

The TEST position is used by maintenance.

Electrical Power Controls and Monitoring Schematic

[Option - Single battery]

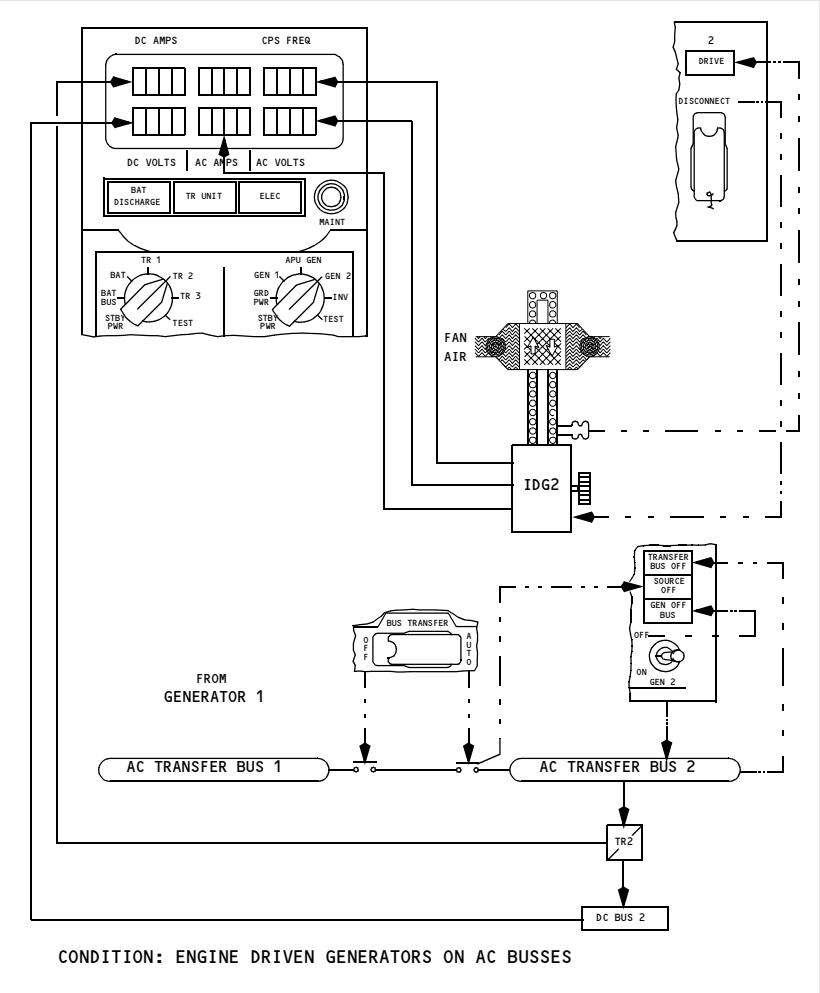

Copyright © The Boeing Company. See title page for details.

DO NOT USE FOR FLIGHT

[Option – Dual battery]

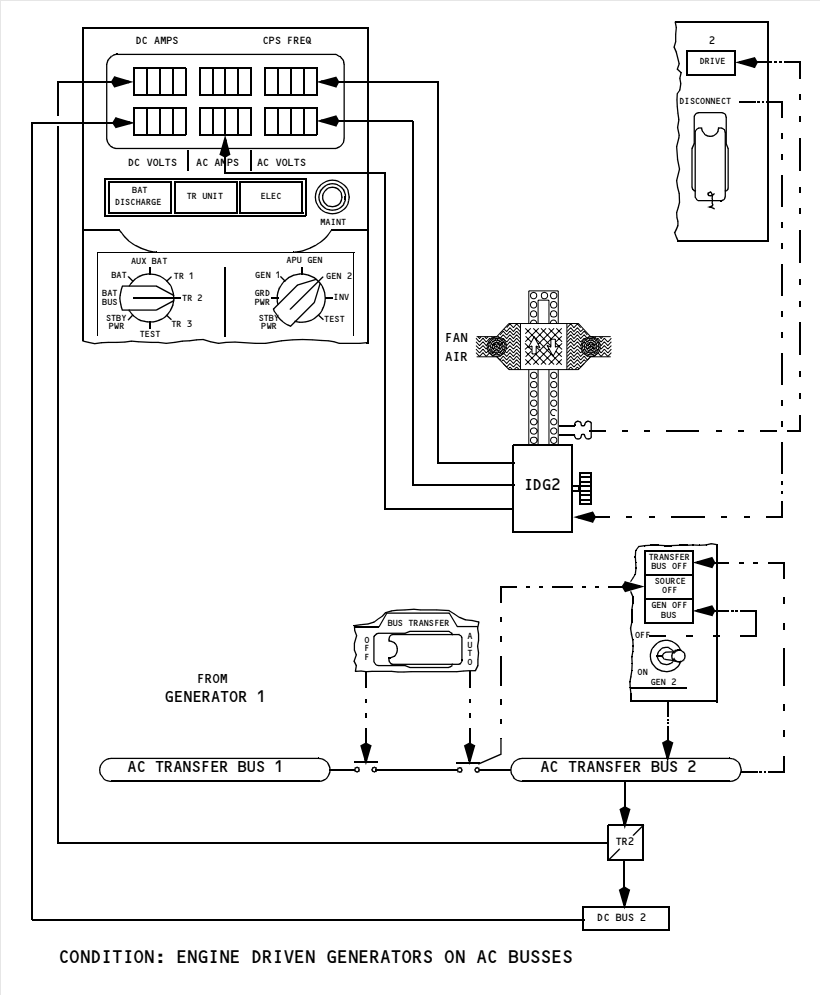

Copyright © The Boeing Company. See title page for details.

DC Power System

28 volt DC power is supplied by three TR units, which are energized from the AC transfer busses. The battery provides DC power to loads required to be operative when no other source is available.

On the ground, an amber ELEC light comes on to indicate that a fault exists in DC power system or standby power system. The ELEC light is inhibited in flight.

Transformer Rectifier Units

The TRs convert 115 volt AC to 28 volt DC, and are identified as TR1, TR2, and TR3.

TR1 receives AC power from transfer bus 1. TR2 receives AC power from transfer bus 2. TR3 normally receives AC power from transfer bus 2 and has a backup source of AC power from transfer bus 1. Any two TRs are capable of supplying the total connected load.

Under normal conditions, DC bus 1, DC bus 2, and the DC standby bus are connected via the cross bus tie relay. In this condition, TR1 and TR2 are each powering DC bus 1, DC bus 2, and the DC standby bus. TR3 powers the battery bus and serves as a backup power source for TR1 and TR2.

The cross bus tie relay automatically opens, isolating DC bus 1 from DC bus 2, under the following conditions:

- At glide slope capture during a flight director or autopilot ILS approach. This isolates the DC busses during approach to prevent a single failure from affecting both navigation receivers and flight control computers
- Bus transfer switch positioned to OFF.

In–flight, an amber TR UNIT light illuminates if TR1, or TR2 and TR3 has failed. On the ground, any TR fault causes the light to illuminate.

Battery Power

Single Battery
[Option]

A 24 volt nickel–cadmium battery is located in the electronics compartment. The battery can supply part of the DC system. Battery charging is automatically controlled. A fully charged battery has sufficient capacity to provide standby power for a minimum of 30 minutes. Battery voltage range is 22–30 volts.

DC busses powered from the battery following a loss of both generators are:

- battery bus
- DC standby bus

Copyright © The Boeing Company. See title page for details.

- hot battery bus
- switched hot battery bus.

The switched hot battery bus is powered whenever the battery switch is ON.

The hot battery bus is always connected to the battery. There is no switch in this circuit. The battery must be above minimum voltage to operate units supplied by this bus. An amber BAT DISCHARGE light comes on when excessive battery discharge is detected.

Dual Battery
[Option]

Two 24 volt nickel–cadmium batteries, main and auxiliary, are located in the electronics compartment. The batteries can supply part of the DC system. The auxiliary battery operates in parallel with the main battery when the battery is powering the standby system. At all other times, the auxiliary battery is isolated from the power distribution system. Battery charging is automatically controlled. Two fully charged batteries have sufficient capacity to provide standby power for a minimum of 60 minutes. Battery voltage range is 22–30 volts.

DC busses powered from the battery following a loss of both generators are:

- battery bus
- DC standby bus
- hot battery bus
- switched hot battery bus.

The switched hot battery bus is powered whenever the battery switch is ON.

The hot battery bus is always connected to the battery. There is no switch in this circuit. The battery must be above minimum voltage to operate units supplied by this bus. An amber BAT DISCHARGE light comes on when excessive battery discharge is detected.

Battery Charger Transformer/Rectifier

Single Battery
[Option]

The purpose of the battery charger is to restore and maintain the battery at full electrical power. The battery charger is powered through AC ground service bus 2.

The battery charger provides a voltage output tailored to maximize the battery charge. Following completion of the primary charge cycle, the battery charger reverts to a constant voltage TR mode. In the TR mode, it powers loads connected to the hot battery bus and the switched hot battery bus. The battery charger TR also powers the battery bus if TR3 fails. With loss of AC transfer bus 1 or the source of power to DC bus 1, the AC and DC standby busses are powered by the battery/battery charger.

Copyright © The Boeing Company. See title page for details.

Dual Battery
[Option]

The purpose of the battery chargers is to restore and maintain the batteries at full electrical power. The main battery charger is powered through AC ground service bus 2. The auxiliary battery charger is powered through AC ground service bus 1.

The battery chargers provide a voltage output tailored to maximize the battery charge. Following completion of the primary charge cycle, the main battery charger reverts to a constant voltage TR mode. In the TR mode, it powers loads connected to the hot battery bus and the switched hot battery bus. The main battery charger TR also powers the battery bus if TR3 fails. With loss of AC transfer bus 1 or the source of power to DC bus 1, the AC and DC standby busses are powered by the main and auxiliary battery/battery chargers.

The auxiliary battery charger and battery are isolated from the power distribution system under normal operation. When the main battery is powering the standby system, the auxiliary battery is connected to operate in parallel with the main battery.

Copyright © The Boeing Company. See title page for details.

DC Power System Schematic

[Option - Single battery]

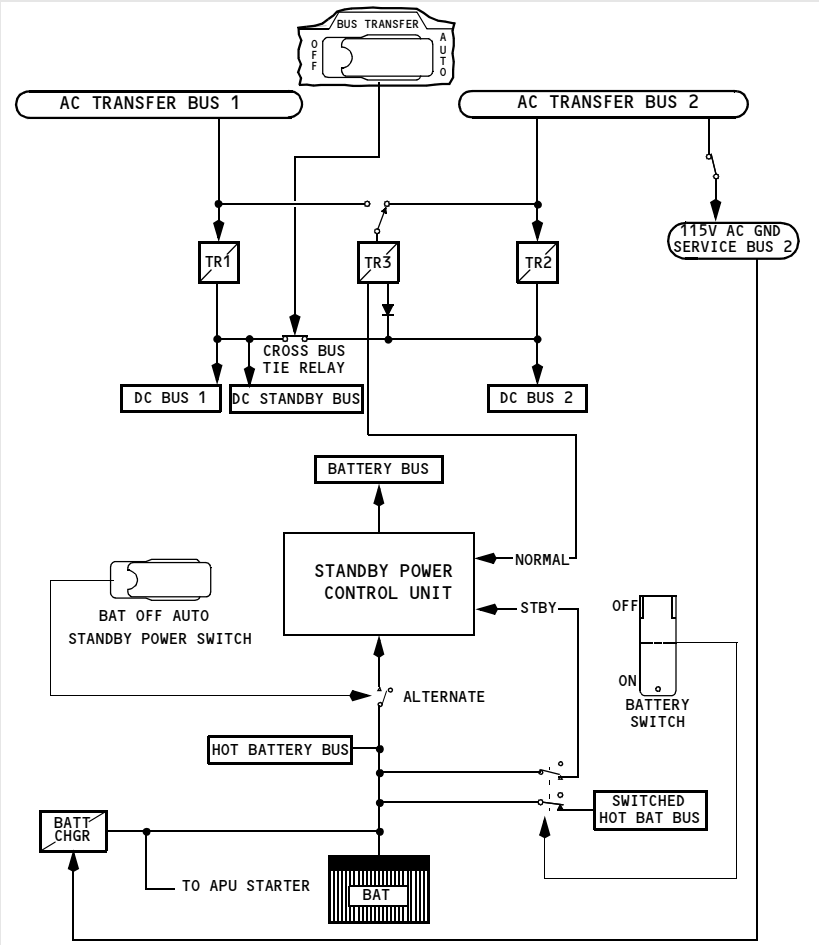

Airplane Configuration - In Flight
Battery Switch - ON
Standby Power Switch - AUTO
Bus Transfer Switch - AUTO
ENGINE GENERATOR CONNECTED

Copyright © The Boeing Company. See title page for details.

[Option – Dual battery]

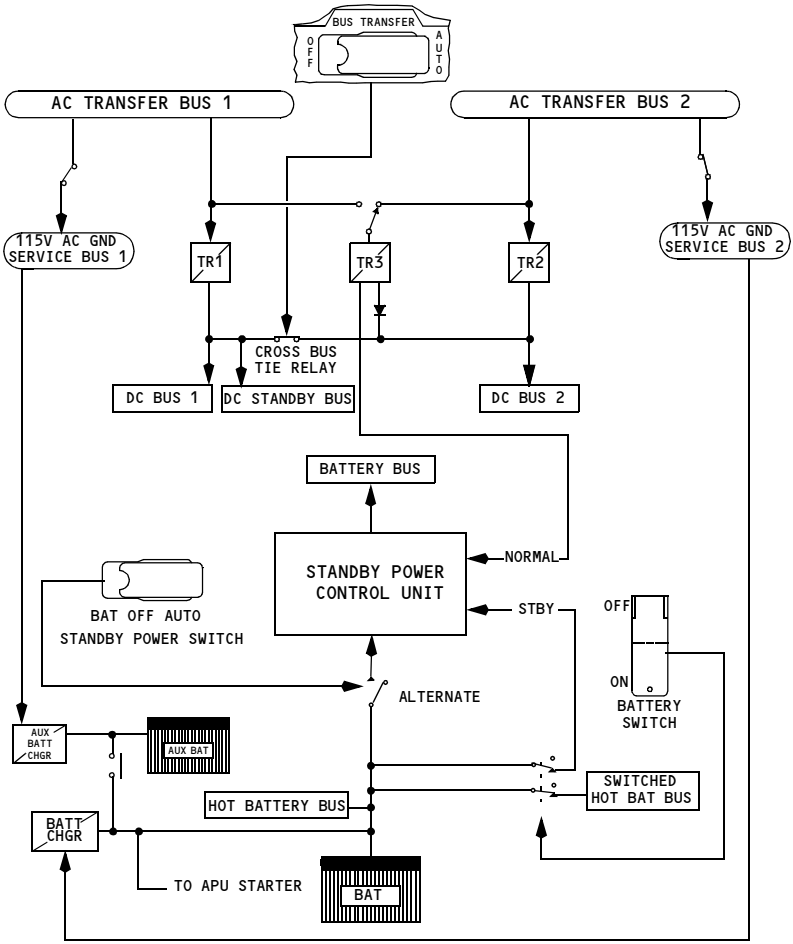

Airplane Configuration – In Flight
Battery Switch – ON
Standby Power Switch – AUTO
Bus Transfer Switch – AUTO
ENGINE GENERATOR CONNECTED TO RELATED BUS

Copyright © The Boeing Company. See title page for details.

Standby Power System

Normal Operation

The standby system provides 115V AC and 24V DC power to essential systems in the event of loss of all engine or APU–driven AC power. The standby power system consists of:

- static inverter
- AC standby bus
- DC standby bus
- battery bus
- hot battery bus
- switched hot battery bus
- main battery

[Option - Dual battery]

- auxiliary battery.

During normal operation the guarded standby power switch is in AUTO and the battery switch is ON. This configuration provides alternate power sources in case of partial power loss as well as complete transfer to battery power if all normal power is lost. Under normal conditions the AC standby bus is powered from AC transfer bus 1. The DC standby bus is powered by TR1, TR2, and TR3; the battery bus is powered by TR3; the hot battery bus and switched hot battery bus are powered by the battery/battery charger.

Alternate Operation

Single Battery
[Option]

The alternate power source for standby power is the battery. With the standby power switch in the AUTO position, the loss of all engine or APU electrical power causes the battery to power the standby loads, both in the air and on the ground. The AC standby bus is powered from the battery via the static inverter. The DC standby bus, battery bus, hot battery bus, and switched hot battery bus are powered directly from the battery.

The standby power switch provides for automatic or manual control of power to the standby buses.

In the AUTO position, automatic switching from normal to alternate power occurs if power from either AC transfer bus 1 or DC bus 1 is lost.

Copyright © The Boeing Company. See title page for details.

Positioning the switch to BAT overrides automatic switching and places the AC standby bus, DC standby bus, and battery bus on battery power. The battery switch may be ON or OFF. If the battery switch is OFF, the switched hot battery bus is not powered.

Positioning the standby power switch to OFF de–energizes both the AC standby bus and the DC standby bus and illuminates the STANDBY PWR OFF light.

Dual Battery
[Option]

The alternate power sources for standby power are the main battery and auxiliary battery. With the standby power switch in the AUTO position, the loss of all engine or APU electrical power causes the batteries to power the standby loads, both in the air and on the ground. The AC standby bus is powered from the batteries via the static inverter. The DC standby bus, battery bus, hot battery bus, and switched hot battery bus are powered directly from the batteries.

The standby power switch provides for automatic or manual control of power to the standby buses.

In the AUTO position, automatic switching from normal to alternate power occurs if power from either AC transfer bus 1 or DC bus 1 is lost.

Positioning the switch to BAT overrides automatic switching and places the AC standby bus, DC standby bus, and battery bus on battery power. The battery switch may be ON or OFF. If the battery switch is OFF, the switched hot battery bus is not powered.

Positioning the standby power switch to OFF de–energizes both the AC standby bus and the DC standby bus and illuminates the STANDBY PWR OFF light.

Static Inverter

The static inverter converts 24 volt DC power from the battery to 115V AC power to supply the AC standby bus during the loss of normal electrical power. The power supply to the inverter is controlled by the standby power switch and the battery switch on the overhead panel.

Copyright © The Boeing Company. See title page for details.

Standby Power System Schematic

[Option - Single battery]

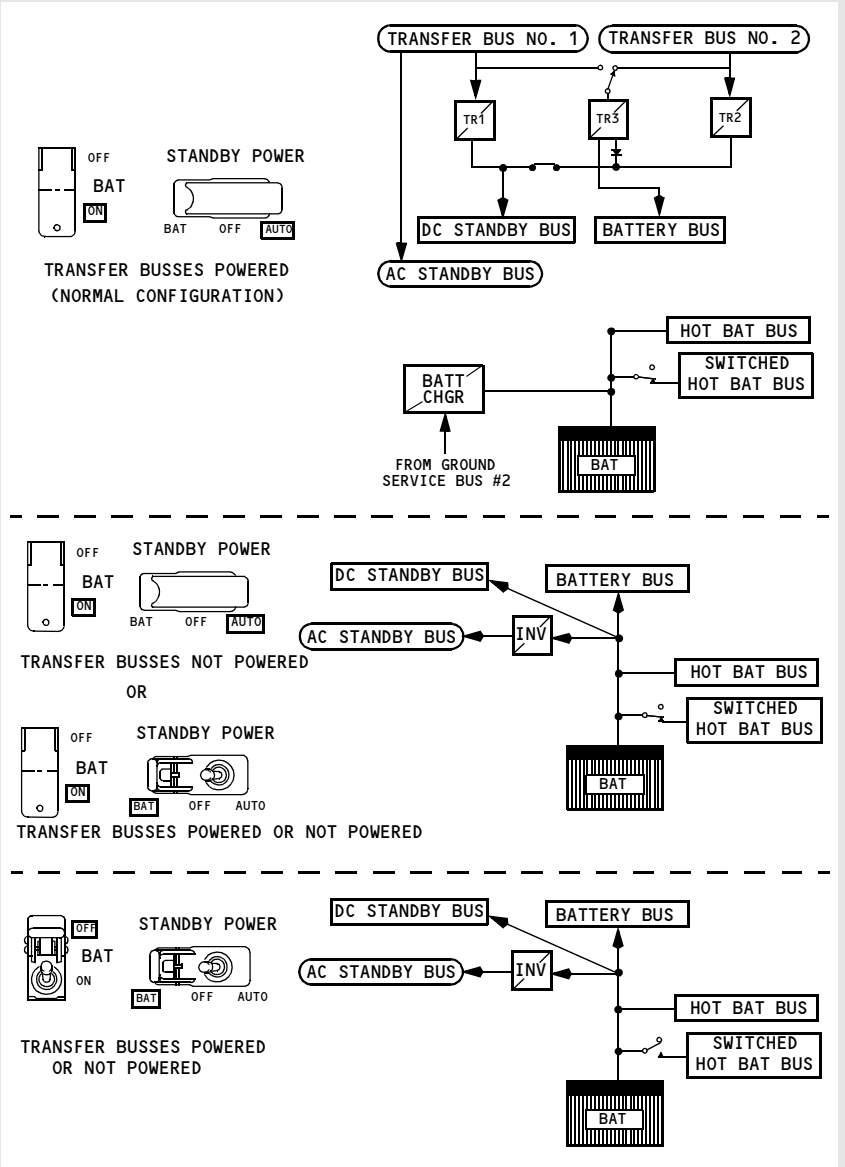

Copyright © The Boeing Company. See title page for details.

[Option – Dual battery]

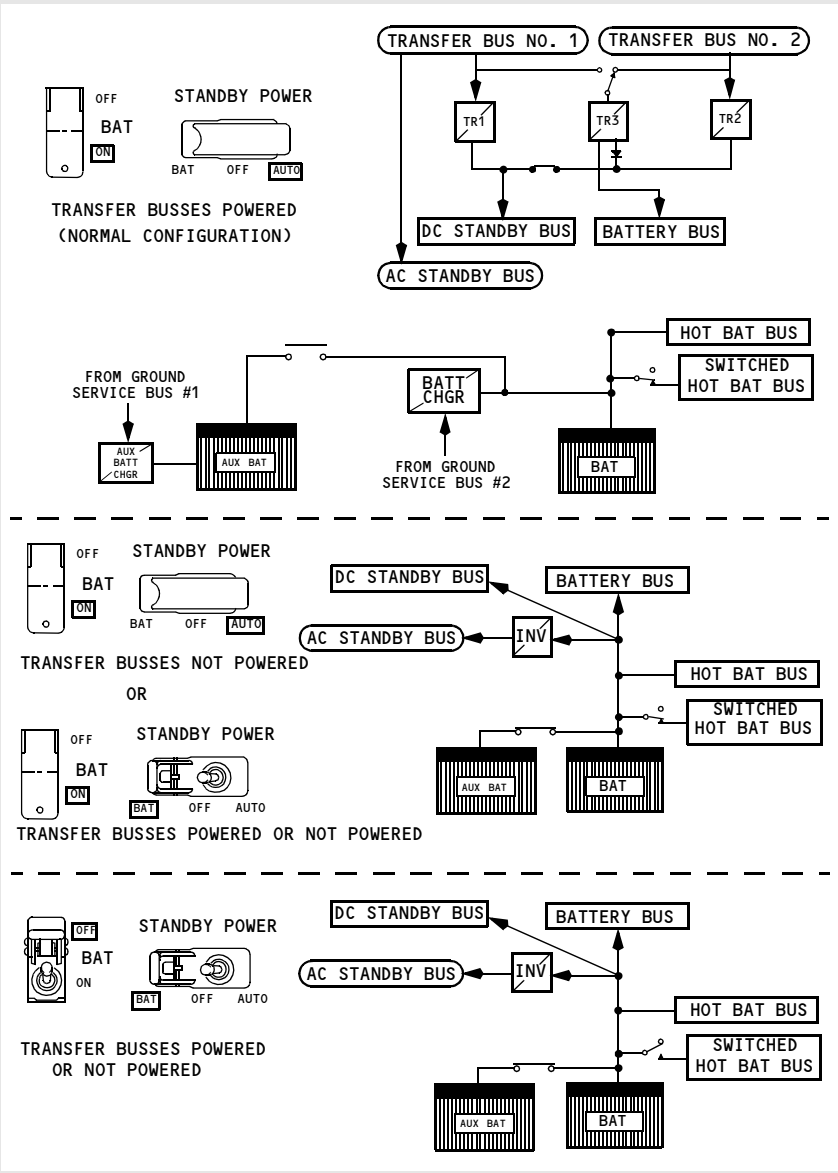

Copyright © The Boeing Company. See title page for details.

All Generators Inoperative

The following list identifies the significant equipment that operates when the main battery and the auxiliary battery are the only source of electrical power.

Airplane General

- standby compass light
- white dome lights
- emergency instrument flood lights
- flight crew oxygen
- passenger oxygen

[Option]
- standby forward airstair interior/exterior operation

Air Systems

- A/C pack valves
- BLEED TRIP OFF lights
- manual pressurization control
- altitude warning horn

[737-600/700]
- PACK TRIP OFF lights

[737-800/900]
- PACK lights

Anti-Ice

[Option]
- Captain's pitot probe heat

Communications

- flight interphone system
- passenger address system
- VHF No. 1

Electrical

- STANDBY POWER OFF light

Engines, APU

- upper display unit

  N1, N2, fuel flow, EGT, fuel quantity, oil pressure, oil temperature, oil quantity
- upper display unit

  N1, N2, fuel flow, EGT, fuel quantity, oil pressure, oil temperature, oil quantity, hydraulic pressure, hydraulic quantity

Copyright © The Boeing Company. See title page for details.

- thrust reversers
- starter valves
- right igniters
- APU operation (start attempts not recommended above 25,000 feet)

Fire Protection

- APU and engine fire extinguisher bottles
- APU and engine fire detection system
- Cargo fire extinguisher bottle

Flight Instruments

- Captain's outboard display unit (compact EFIS or PFD format)

[Option]

- Captain's outboard and inboard display units (EFIS/MAP or PFD/ND format)
- clocks
- left EFIS control panel

Flight Management, Navigation

- FMC
- left CDU
- heading/track indications
- VHF NAV No. 1
- ILS No. 1
- left IRS
- left GPS
- marker beacon

[Option]

- ADF No. 1

[Option]

- IFF No. 1

[Option]

- transponder No. 1

[Option]

- DME No. 1

Fuel

- crossfeed valve
- engine fuel shutoff valves
- spar fuel shutoff valve

Copyright © The Boeing Company. See title page for details.

- FUEL VALVE CLOSED lights
- fuel quantity indicators

Hydraulic Power

- engine hydraulic shutoff valves
- standby rudder shutoff valves

Landing Gear

- inboard antiskid system
- ANTISKID INOP light
- parking brake
- air/ground system

Warnings

- stall warning system
- aural warnings
- master caution light recall

Basic Equipment Operating – Captain Instrument Panel

The standby power system utilizes the battery as a source of power to supply the below depicted flight instruments. All of the Captain's instruments that are powered by standby power are integrally lighted on standby power

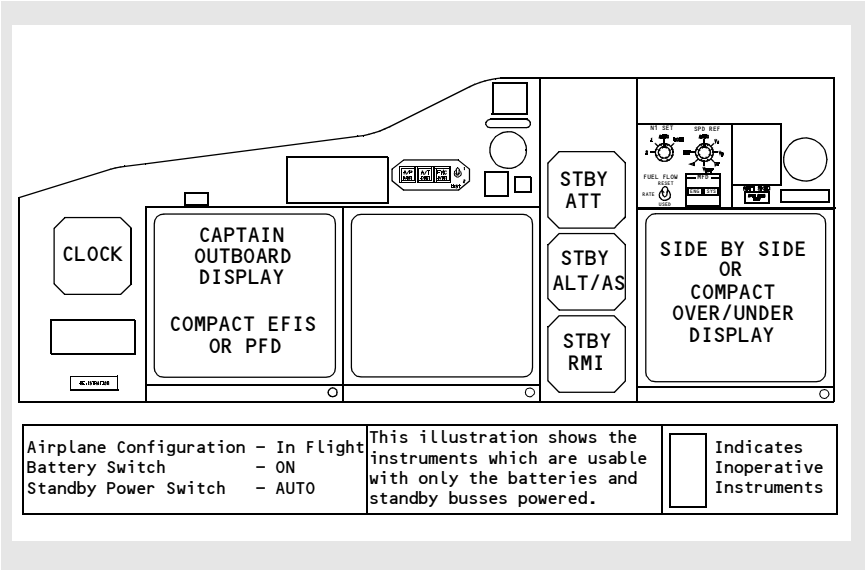

Copyright © The Boeing Company. See title page for details.

[Option - Captain's Outboard and Inboard Display Units on Standby Power]

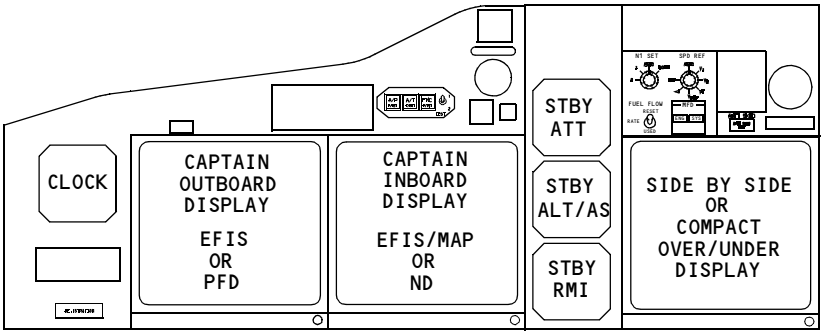

Airplane Configuration - In Flight Battery Switch - ON Standby Power Switch - AUTO	This illustration shows the instruments which are usable with only the batteries and standby busses powered.	Indicates Inoperative Instruments

Basic Equipment Operating – First Officer Instrument Panel

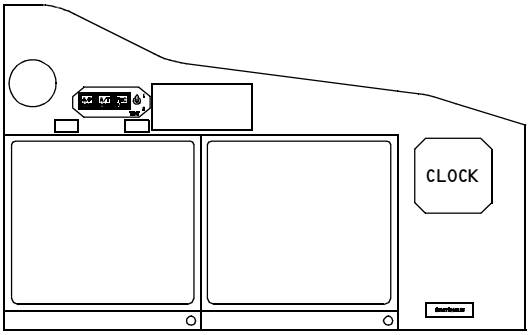

FLIGHT DECK COMMUNICATION

Audio Selector Panels
Flight Interphone
Passenger Address System

FLIGHT DECK LIGHTS

Standby Instrument Floodlight
White Dome Light
Magnetic Compass Light

Airplane Configuration - In Flight Battery Switch - ON Standby Power Switch - AUTO	This illustration shows the instruments which are usable with only the batteries and standby busses powered.	Indicates Inoperative Instruments

Copyright © The Boeing Company. See title page for details.

Intentionally
Blank

Copyright © The Boeing Company. See title page for details.

Side by Side – Displays 7.10.1

Primary and Secondary Engine Indications 7.10.1
Autothrottle Limit, Thrust Mode Display and Total Air Temperature 7.10.2
N1 Indications 7.10.3
Thrust Reverser Indications 7.10.4
Thermal Anti–Ice Indication 7.10.5
EGT Indications 7.10.6
Engine Fail Alert 7.10.7
N2 Indications 7.10.8
Crossbleed Start Indication 7.10.8
Fuel Flow/Fuel Used Indications 7.10.9
Crew Alerts 7.10.10
Engine Oil Indications 7.10.11
Engine Vibration Indications 7.10.12

Over/Under – Displays 7.11.1

Primary Engine Indications 7.11.1
Total Air Temperature, Thrust Mode Display, Selected Temperature and Autothrottle Limit 7.11.2
N1 Indications 7.11.3
Thrust Reverser Indications 7.11.5
Thermal Anti–Ice Indication 7.11.5
EGT Indications 7.11.5
Engine Fail Alert 7.11.7
Crew Alerts 7.11.7
Secondary Engine Indications 7.11.9
N2 Indications 7.11.10
Crossbleed Start Indication 7.11.10
Fuel Flow/Fuel Used Indications 7.11.11
Oil Pressure Indications 7.11.12

Copyright © The Boeing Company. See title page for details.

Oil Temperature Indications 7.11.13
Oil Quantity Indications 7.11.13
Engine Vibration Indications 7.11.14
Compact Engine Displays 7.11.15

General Controls and Indicators 7.15.1

Engine Start Switches 7.15.1
Engine Display Control Panel 7.15.3
Engine Panel 7.15.4
Engine Controls 7.15.6
APU 7.15.7

Engine System Description 7.20.1

Introduction 7.20.1
Engine Indications 7.20.1
Engine Indications 7.20.2
Primary Engine Indications 7.20.2
Secondary Engine Indications 7.20.2
Normal Display Format 7.20.3
Compact Display 7.20.4
Electronic Engine Control (EEC) 7.20.4
EEC Normal Mode 7.20.4
EEC Alternate Mode 7.20.5
Structural Limit Protection 7.20.6
Idle Operation 7.20.6
Power Plant Schematic 7.20.7
Engine Fuel System 7.20.8
Engine Oil System 7.20.8
Engine Fuel and Oil System Schematic 7.20.9
Engine Start System 7.20.10
Abnormal Start Protection (Ground Starts Only) 7.20.10
Engine Ignition System 7.20.11
Inflight Starting 7.20.11

Copyright © The Boeing Company. See title page for details.

Engine Start and Ignition System Schematic. 7.20.12
Thrust Reverser. 7.20.14
Thrust Reverser Schematic 7.20.16

APU System Description. 7.30.1
Introduction. 7.30.1
APU Location 7.30.1
APU Operation 7.30.1
APU Fuel Supply. 7.30.2
APU Engine and Cooling Air 7.30.2
Electrical Requirements for APU Operation. 7.30.2
APU Start. 7.30.2
APU Shutdown 7.30.3
Electronic Control Unit (ECU) 7.30.3
APU Automatic Load Shedding 7.30.3

Copyright © The Boeing Company. See title page for details.

Intentionally
Blank

Copyright © The Boeing Company. See title page for details.

Primary and Secondary Engine Indications

[Option - Side by side display, lbs]

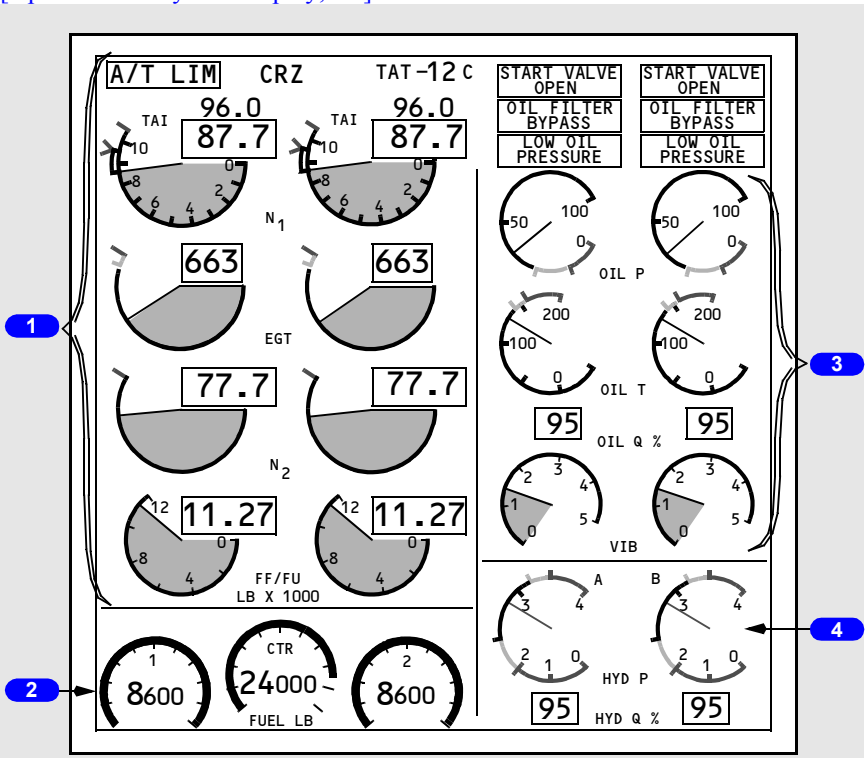

UPPER DISPLAY UNIT

1 Primary Engine Indications

2 Fuel Quantity Indications

Refer to Chapter 12, Fuel.

3 Secondary Engine Indications

4 Hydraulic Indications

Refer to Chapter 13, Hydraulics.

Copyright © The Boeing Company. See title page for details.

DO NOT USE FOR FLIGHT

Autothrottle Limit, Thrust Mode Display and Total Air Temperature

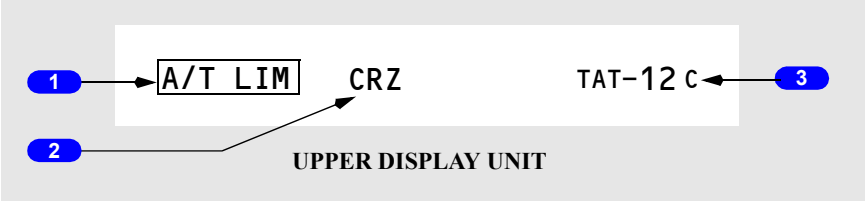

1 Autothrottle Limit (A/T LIM) Indication

Illuminated (white) – The FMC is not providing the A/T system with N1 limit values. The A/T is using a degraded N1 thrust limit from the related EEC.

2 Thrust Mode Display

Displayed (green) – the active N1 limit reference mode.

With N1 manual select knob on engine display control panel in AUTO, active N1 limit is displayed by reference N1 bugs.

Active N1 limit is normally calculated by FMC.

Thrust mode display annunciations are:

- R-TO – reduced takeoff
- R-CLB – reduced climb
- TO – takeoff

[Option]

- TO B – takeoff bump thrust
- CLB – climb
- CRZ – cruise
- G/A – go–around
- CON – continuous
- – – – – FMC not computing thrust limit.

Note: R-TO does not indicate the type of reduced takeoff. The N1 limit may be reduced due to the entry of an assumed temperature, a takeoff thrust derate or a combination of both assumed temperature and takeoff thrust derate.

3 Total Air Temperature (TAT) Indication

Displayed (label –cyan, temp – white) – total air temperature (degrees C).

Copyright © The Boeing Company. See title page for details.

N1 Indications

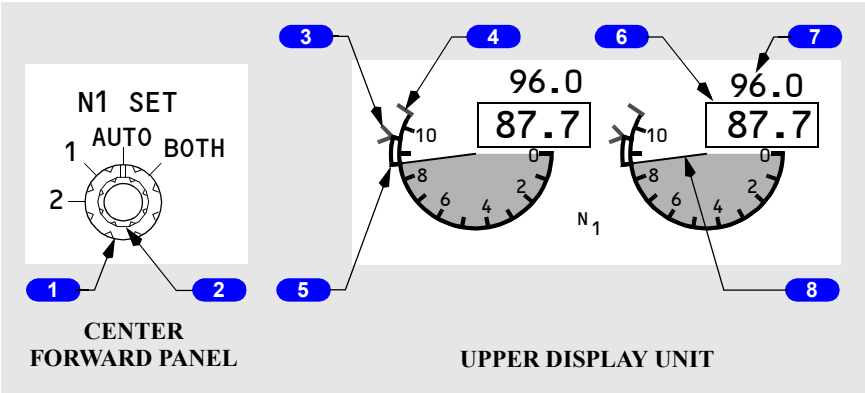

1 N1 SET Outer Knob

AUTO –

- both reference N1 bugs set by FMC based on N1 limit page and takeoff reference page
- displays reference N1 bugs at active N1 limit for A/T.

BOTH –

- both reference N1 bugs and readouts manually set by turning N1 SET inner knob
- has no effect on A/T operation.

1 or 2 –

- respective N1 reference bug and readout manually set by turning N1 SET inner knob
- has no effect on A/T operation.

2 N1 SET Inner Knob (spring-loaded to center)

Rotate – positions reference N1 bug(s) and readouts when N1 SET outer knob is set to BOTH, 1, or 2.

3 Reference N1 Bugs

Displayed (green) – with N1 SET outer knob in AUTO, 1, 2 or BOTH position.

4 N1 Redlines

Displayed (red) – N1% RPM operating limit

Copyright © The Boeing Company. See title page for details.

5 N1 Command Sectors

Displayed (white) – momentary difference between actual N1 and value commanded by thrust lever position.

6 N1 RPM Readouts (digital)

Displayed (white) – normal operating range.

Displayed (red) –

- operating limit exceeded
- on ground after engine shutdown, red box indicates an inflight exceedance has occurred.

7 Reference N1 Readouts

Displayed (green) – manually set N1% RPM:

- set with N1 SET inner knob when N1 SET is in BOTH, 1, or 2 position
- blank when N1 SET outer knob in AUTO position
- – – – – when N1 SET outer knob in Auto and FMC source invalid.

8 N1 RPM Indications

Displays N1% RPM:

- displayed (white) – normal operating range
- displayed (red) – operating limit exceeded.

Thrust Reverser Indications

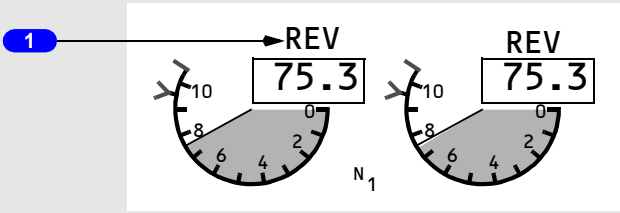

UPPER DISPLAY UNIT

1 Thrust Reverser (REV) Indications

Displayed (amber) – thrust reverser is moved from stowed position.

Displayed (green) – thrust reverser is deployed.

Copyright © The Boeing Company. See title page for details.

Thermal Anti–Ice Indication

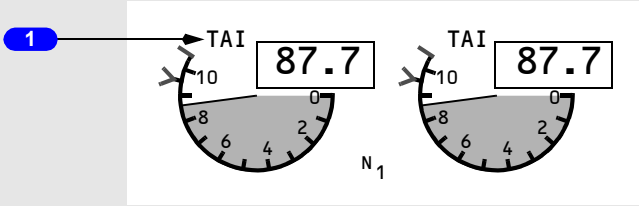

UPPER DISPLAY UNIT

1 Thermal Anti–Ice (TAI) Indications

Displayed (green) – cowl anti–ice valve(s) open.

Displayed (amber) – cowl anti–ice valve is not in position indicated by related engine anti–ice switch.

Copyright © The Boeing Company. See title page for details.

EGT Indications

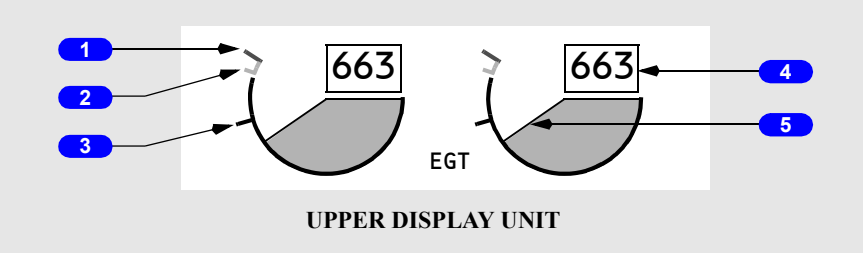

1 Exhaust Gas Temperature (EGT) Redlines

Displayed (red) – maximum takeoff EGT limit.

2 Exhaust Gas Temperature (EGT) Amber Bands

Displayed (amber) – lower end of band displays maximum continuous EGT limit.

3 Exhaust Gas Temperature (EGT) Start Limit Lines

Displayed (red) – N2 less than 50%.

4 Exhaust Gas Temperature (EGT) Readouts (digital)

Displayed (white) – normal operating range (degrees C)

[Option - Color change inhibit 5 minutes]
Displayed (amber) – maximum continuous limit exceeded; color change inhibited for up to 5 minutes during takeoff or go-around

[Option - Color change inhibit 10 minutes]
Displayed (amber) – maximum continuous limit exceeded

- color change inhibited for up to 5 minutes during takeoff or go-around (normal operation)
- color change inhibited for up to 10 minutes during takeoff or go-around (when an engine out condition occurs within the first 5 minutes of the inhibit)

Displayed (red) – maximum takeoff limit or start limit exceeded

On ground, after engine shutdown, red box indicates an exceedance has occurred

EEC senses conditions that may lead to hot start during ground starts (blinking white box).

5 Exhaust Gas Temperature (EGT) Indications

Displayed (white) – normal operating range.

Copyright © The Boeing Company. See title page for details.

[Option - Color change inhibit 5 minutes]
Displayed (amber) – maximum continuous limit exceeded; color change inhibited for up to 5 minutes during takeoff or go–around

[Option - Color change inhibit 10 minutes]
Displayed (amber) – maximum continuous limit exceeded

- color change inhibited for up to 5 minutes during takeoff or go–around (normal operation)
- color change inhibited for up to 10 minutes during takeoff or go–around (when an engine out condition occurs within the first 5 minutes of the inhibit)

Displayed (red) – maximum takeoff limit or start limit exceeded.

Engine Fail Alert

UPPER DISPLAY UNIT

1 Engine Fail (ENG FAIL) Alert

Displayed (amber) –

- engine N2 below sustainable idle (less than 50%); and
- engine start lever in IDLE position.

Alert remains until –

- engine N2 above sustainable idle (50% or greater); or
- start lever moved to CUTOFF; or
- engine fire warning switch pulled.

Copyright © The Boeing Company. See title page for details.

N2 Indications

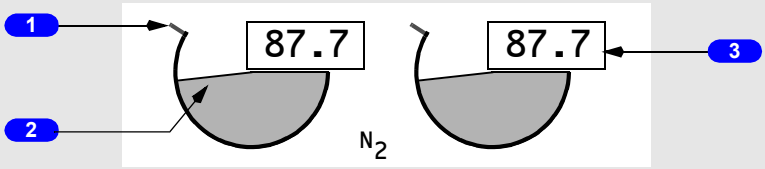

UPPER DISPLAY UNIT

1 N2 Redlines

Displayed (red) – N2 % RPM operating limit.

2 N2 RPM Indications

Displays N2 % RPM

- displayed (white) – normal operating range
- displayed (red) – operating limit exceeded.

3 N2 Readouts (digital)

Displayed (white) – normal operating range.

Displayed (red) –

- operating limit exceeded
- on ground, after engine shutdown, red box indicates an inflight exceedance has occurred.

Crossbleed Start Indication

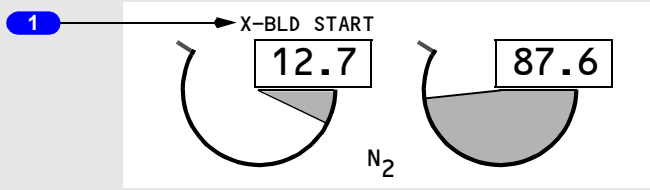

UPPER DISPLAY UNIT

1 Crossbleed (X–BLD) START Indication

Displayed (magenta) – crossbleed air recommended for inflight start.

Displayed when airspeed is less than required for a windmilling start.

Copyright © The Boeing Company. See title page for details.

Fuel Flow/Fuel Used Indications

[Option - lbs]

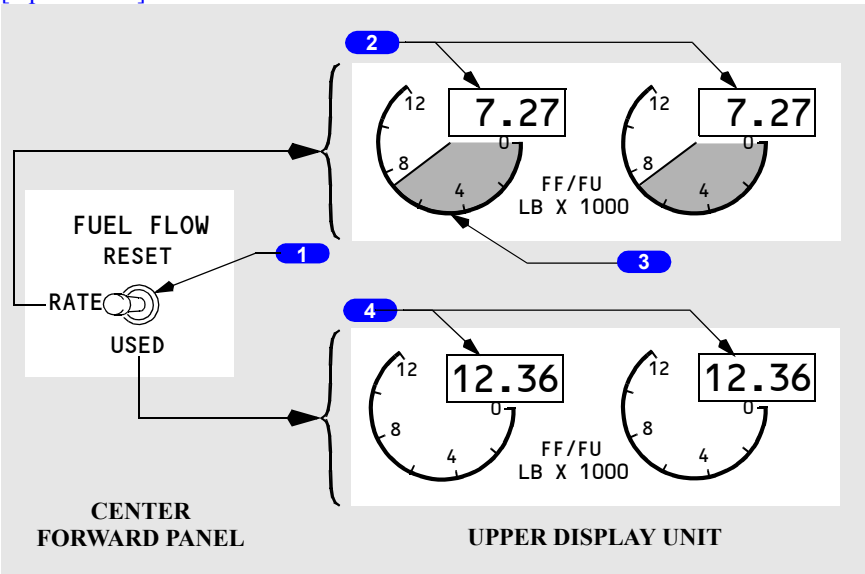

1 FUEL FLOW Switch (spring-loaded to RATE)

RATE – displays fuel flow to engine.

USED –

- pointer and shading are removed
- displays fuel used since last reset
- after 10 seconds, display automatically reverts to fuel flow.

RESET –

- pointer and shading are removed
- resets fuel used to zero
- displays fuel used momentarily, decreases to zero, then displays fuel flow.

2 Fuel Flow (FF) Readout (digital)

[Option - lbs]
Displayed (white) – fuel flow to engine with FUEL FLOW switch in RATE position (pounds per hour x 1000).

Copyright © The Boeing Company. See title page for details.

3 Fuel Flow (FF) Dial/ Index Markers & Digits (white)

[Option - lbs]
Displayed (white) – fuel flow to engine with FUEL FLOW switch in RATE position (pounds per hour x 1000).

4 Fuel Used (FU) Readout (digital)

Illuminated (white) – displayed when FUEL FLOW switch moved to USED or RESET.

Crew Alerts

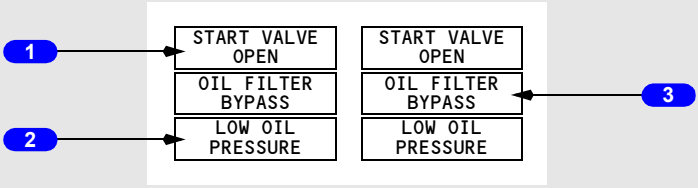

UPPER DISPLAY UNIT

1 START VALVE OPEN Alert

Illuminated (amber) –

- steady – respective engine start valve open and air is supplied to starter
- blinking – uncommanded opening of start valve. Alert is displayed and solid amber boxes are displayed in unannunciated positions for that engine. All three boxes blink for ten seconds, then alert remains on steady and solid amber boxes are removed (see Note).

2 LOW OIL PRESSURE Alert

Illuminated (amber) –

- steady – oil pressure at or below red line
- blinking – with a condition of low oil pressure. Alert is displayed and solid amber boxes are displayed in unannunciated positions for that engine. All three boxes blink for ten seconds, then alert remains on steady and solid amber boxes are removed (see Note).

Copyright © The Boeing Company. See title page for details.

3 OIL FILTER BYPASS Alert

Illuminated (amber) –

- steady – indicates an impending bypass of scavenge oil filter
- blinking – with an impending bypass. Alert is displayed and solid amber boxes are displayed in unannunciated positions for that engine. All three boxes blink for ten seconds, then alert remains on steady and solid amber boxes are removed (see Note).

Note: Blinking is inhibited:

- during takeoff from 80 knots to 400 feet RA, or 30 seconds after reaching 80 knots, whichever occurs first
- during landing below 200 feet RA until 30 seconds after touchdown
- during periods when blinking is inhibited, alerts illuminate steady.

Engine Oil Indications

[Option - Low oil quantity reverse video]

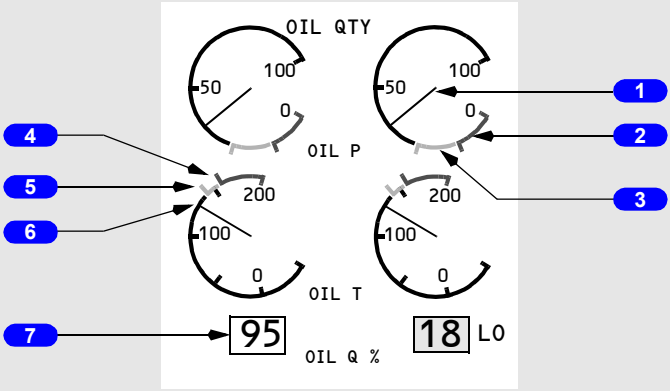

UPPER DISPLAY UNIT

1 Oil Pressure (OIL P) Indication

Displays engine oil pressure (psi)

- displayed (white) – normal operating range
- displayed (amber) – caution range
- displayed (red) – operating limit reached.

2 Low Oil Pressure (OIL P) Redline

Displayed (red) – oil pressure operating limit.

Copyright © The Boeing Company. See title page for details.

3 Low Oil Pressure (OIL P) Amber Band

Displayed (amber) – low oil pressure caution range beginning at red line:

- variable depending on N2% RPM above 65% N2
- amber band not displayed below 65% N2.

4 High Oil Temperature (OIL T) Redline

Displayed (red) – oil temperature operating limit.

5 High Oil Temperature (OIL T) Amber Band

Displayed (amber) – oil temperature caution range.

6 Oil Temperature (OIL T) Indication

Displays oil temperature (degrees C):

- displayed (white) – normal operating range
- displayed (amber) – caution range reached
- displayed (red) – operating limit reached.

7 Oil Quantity (OIL Q)% Readout

Displays usable oil quantity as a percentage of full quantity.

[Option - Low oil quantity reverse video]
Video is reversed and LO (white) displayed for low oil quantity.

Note: Indicated oil quantity may decrease significantly during engine start, takeoff and climb out. If this occurs, engine operation is not impacted and the correct oil quantity should be indicated during level flight.

Note: An oil quantity indication as low as zero is normal if windmilling N2 RPM is below approximately 8%.

Engine Vibration Indications

[Option - High vibration alert]

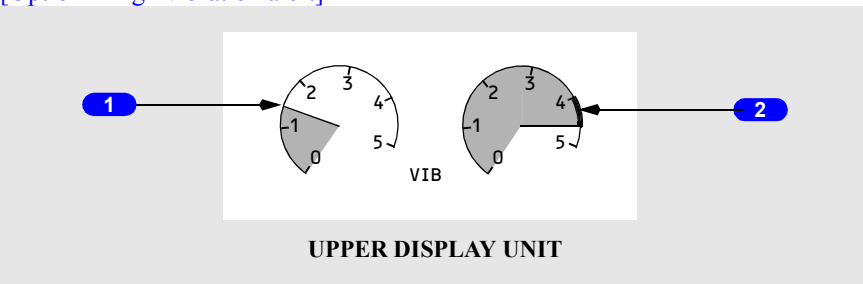

UPPER DISPLAY UNIT

Copyright © The Boeing Company. See title page for details.

1 Vibration (VIB) Pointer

Displayed (white) – engine vibration level.

2 High Engine Vibration Indication
[Option - High vibration alert]

Displayed (white)

When engine vibration level is greater than four units, the portion of the dial arc between 4 units and the pointer, becomes bold.

Copyright © The Boeing Company. See title page for details.

Intentionally
Blank

Copyright © The Boeing Company. See title page for details.

Primary Engine Indications

[Option - Over/Under display, kgs, fuel flow displayed full time]

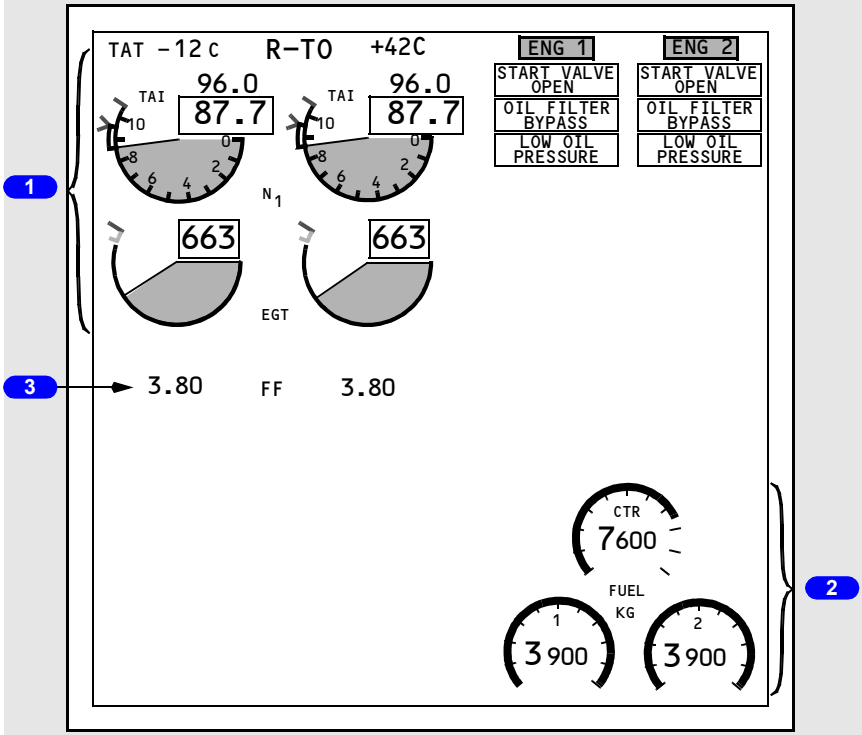

UPPER DISPLAY UNIT

1 Primary Engine Indications

2 Fuel Quantity Indications

Refer to Chapter 12, Fuel

3 Fuel Flow Indications
[Option - Fuel flow displayed full time]

Copyright © The Boeing Company. See title page for details.

Total Air Temperature, Thrust Mode Display, Selected Temperature and Autothrottle Limit

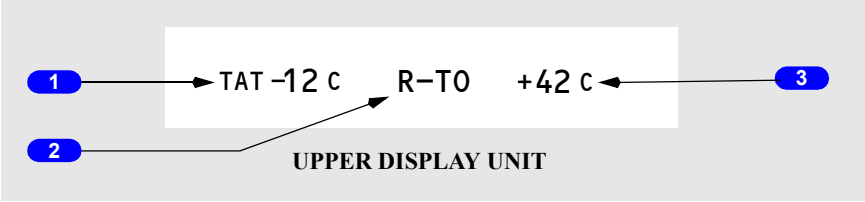

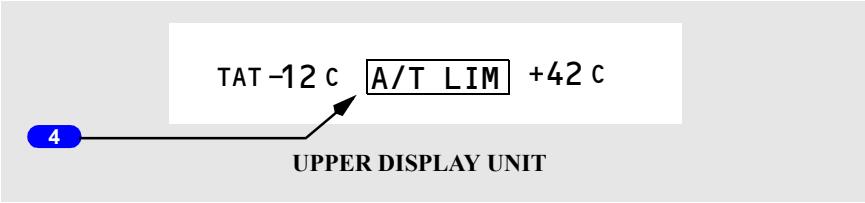

1 Total Air Temperature (TAT) Indication

Displayed (label – cyan, temp – white) – total air temperature (degrees C).

2 Thrust Mode Display

Displayed (green) – the active N1 limit reference mode.

With N1 manual select knob on engine display control panel in AUTO, active N1 limit is displayed by reference N1 bugs.

Active N1 limit is normally calculated by FMC.

Thrust mode display annunciations are:

- R-TO – reduced takeoff
- R-CLB – reduced climb
- TO – takeoff

[Option]

- TO B – takeoff bump thrust
- CLB – climb
- CRZ – cruise
- G/A – go–around
- CON – continuous
- – – – – FMC not computing thrust limit.

Note: R-TO does not indicate the type of reduced takeoff. The N1 limit may be reduced due to the entry of an assumed temperature, a takeoff thrust derate or a combination of both assumed temperature and takeoff thrust derate.

Copyright © The Boeing Company. See title page for details.

3 Selected Temperature

Displayed (green) – selected assumed temperature (degrees C) for reduced thrust takeoff N1.

Repeats data selected on TAKEOFF REF page.

4 Autothrottle Limit (A/T LIM) Indication

Illuminated (white) – The FMC is not providing the A/T system with N1 limit values. The A/T is using a degraded N1 thrust limit from the related EEC.

Replaces thrust mode display annunciation when illuminated.

N1 Indications

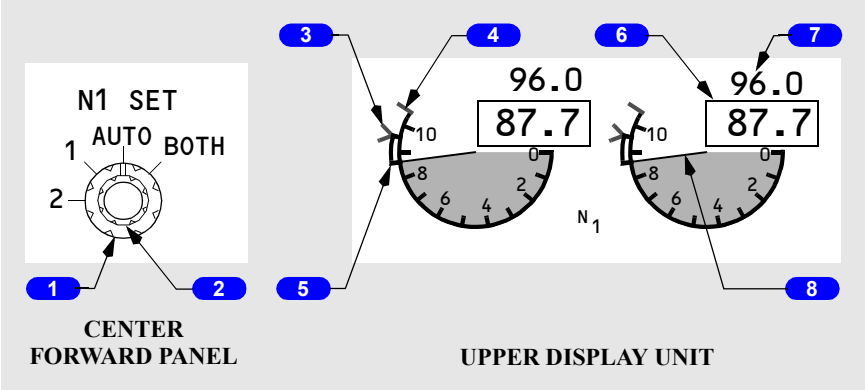

1 N1 SET Outer Knob

AUTO –

- both reference N1 bugs set by FMC based on N1 limit page and takeoff reference page
- displays reference N1 bugs at active N1 limit for A/T.

BOTH –

- both reference N1 bugs and readouts manually set by turning N1 SET inner knob
- has no effect on A/T operation.

1 or 2 –

- respective N1 reference bug and readout manually set by turning N1 SET inner knob
- has no effect on A/T operation.

Copyright © The Boeing Company. See title page for details.

2 N1 SET Inner Knob (spring-loaded to center)

Rotate – positions reference N1 bug(s) and readouts when N1 SET outer knob is set to BOTH, 1, or 2.

3 Reference N1 Bugs

Displayed (green) – with N1 SET outer knob in AUTO, 1, 2 or BOTH position.

4 N1 Redlines

Displayed (red) – N1% RPM operating limit

5 N1 Command Sectors

Displayed (white) – momentary difference between actual N1 and value commanded by thrust lever position.

6 N1 RPM Readouts (digital)

Displayed (white) – normal operating range.

Displayed (red) –

- operating limit exceeded
- on ground after engine shutdown, red box indicates an inflight exceedance has occurred.

7 Reference N1 Readouts

Displayed (green) – manually set N1% RPM:

- set with N1 SET inner knob when N1 SET is in BOTH, 1, or 2 position
- blank when N1 SET outer knob in AUTO position
- – – – – when N1 SET outer knob in Auto and FMC source invalid.

8 N1 RPM Indications

Displays N1% RPM:

- displayed (white) – normal operating range
- displayed (red) – operating limit exceeded.

Copyright © The Boeing Company. See title page for details.

Thrust Reverser Indications

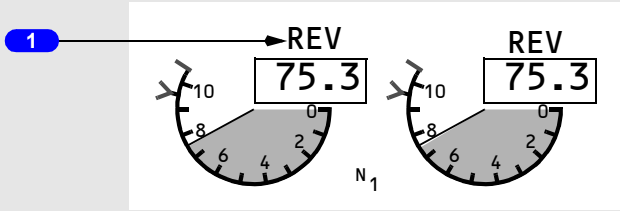

UPPER DISPLAY UNIT

1 Thrust Reverser (REV) Indications

Displayed (amber) – thrust reverser is moved from stowed position.

Displayed (green) – thrust reverser is deployed.

Thermal Anti–Ice Indication

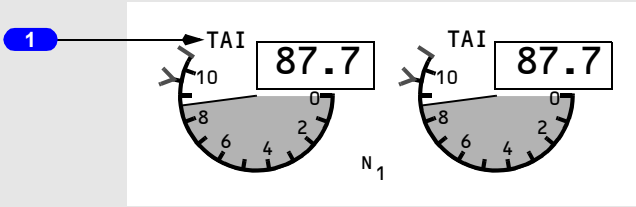

UPPER DISPLAY UNIT

1 Thermal Anti–Ice (TAI) Indications

Displayed (green) – cowl anti–ice valve(s) open.

Displayed (amber) – cowl anti–ice valve is not in position indicated by related engine anti–ice switch.

EGT Indications

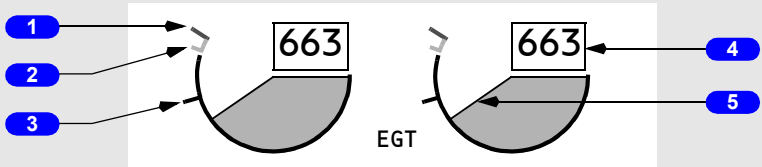

UPPER DISPLAY UNIT

Copyright © The Boeing Company. See title page for details.

1 Exhaust Gas Temperature (EGT) Redlines

Displayed (red) – maximum takeoff EGT limit.

2 Exhaust Gas Temperature (EGT) Amber Bands

Displayed (amber) – lower end of band displays maximum continuous EGT limit.

3 Exhaust Gas Temperature (EGT) Start Limit Lines

Displayed (red) – N2 less than 50%.

4 Exhaust Gas Temperature (EGT) Readouts (digital)

Displayed (white) – normal operating range (degrees C)

[Option - Color change inhibit 5 minutes]
Displayed (amber) – maximum continuous limit exceeded; color change inhibited for up to 5 minutes during takeoff or go-around

[Option - Color change inhibit 10 minutes]
Displayed (amber) – maximum continuous limit exceeded

- Color change inhibited for up to 5 minutes during takeoff or go-around (normal operation)
- color change inhibited for up to 10 minutes during takeoff or go-around (when an engine out condition occurs within the first 5 minutes of the inhibit)

Displayed (red) – maximum takeoff limit or start limit exceeded

On ground, after engine shutdown, red box indicates an exceedance has occurred

EEC senses conditions that may lead to hot start during ground starts (blinking white box).

5 Exhaust Gas Temperature (EGT) Indications

Displayed (white) – normal operating range.

[Option - Color change inhibit 5 minutes]
Displayed (amber) – maximum continuous limit exceeded; color change inhibited for up to 5 minutes during takeoff or go–around

[Option - Color change inhibit 10 minutes]
Displayed (amber) – maximum continuous limit exceeded

- color change inhibited for up to 5 minutes during takeoff or go–around (normal operation)
- color change inhibited for up to 10 minutes during takeoff or go–around (when an engine out condition occurs within the first 5 minutes of the inhibit)

Copyright © The Boeing Company. See title page for details.

Displayed (red) – maximum takeoff limit or start limit exceeded.

Engine Fail Alert

UPPER DISPLAY UNIT

1 Engine Fail (ENG FAIL) Alert

Displayed (amber) –

- engine operating below sustainable idle (less than 50% N2); and
- engine start lever in IDLE position.

Alert remains until –

- engine recovers; or
- start lever moved to CUTOFF; or
- engine fire warning switch pulled.

Crew Alerts

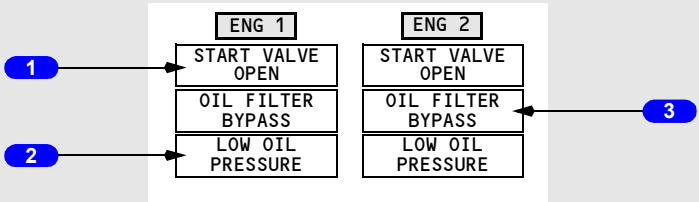

UPPER DISPLAY UNIT

1 START VALVE OPEN Alert

Illuminated (amber) –

- steady – respective engine start valve open and air is supplied to starter
- blinking – uncommanded opening of start valve. Alert is displayed and solid amber boxes are displayed in unannunciated positions for that engine. All three boxes blink for ten seconds, then alert remains on steady and solid amber boxes are removed (see Note).

Copyright © The Boeing Company. See title page for details.

2 LOW OIL PRESSURE Alert

Illuminated (amber) –

- steady – oil pressure at or below red line
- blinking – with a condition of low oil pressure. Alert is displayed and solid amber boxes are displayed in unannunciated positions for that engine. All three boxes blink for ten seconds, then alert remains on steady and solid amber boxes are removed (see Note).

3 OIL FILTER BYPASS Alert

Illuminated (amber) –

- steady – indicates an impending bypass of scavenge oil filter
- blinking – with an impending bypass. Alert is displayed and solid amber boxes are displayed in unannunciated positions for that engine. All three boxes blink for ten seconds, then alert remains on steady and solid amber boxes are removed (see Note).

Note: Blinking is inhibited:

- during takeoff from 80 knots to 400 feet RA, or 30 seconds after reaching 80 knots, whichever occurs first
- during landing below 200 feet RA until 30 seconds after touchdown
- during periods when blinking is inhibited, alerts illuminate steady.

Copyright © The Boeing Company. See title page for details.

Secondary Engine Indications

[Option - Over/Under display, kgs]

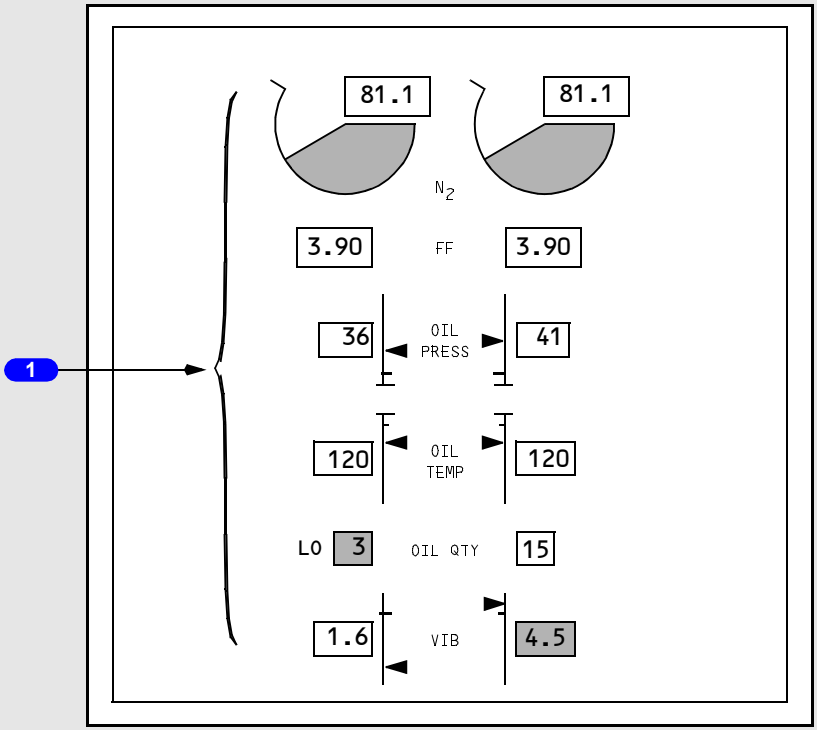

LOWER DISPLAY UNIT

1 Secondary Engine Indications

Secondary engine indications are displayed:

- when CDS initially receives power
- when selected by the Multi-Function Display (MFD)
- in flight when an engine start lever moved to CUTOFF
- in flight when an engine fails
- when a secondary engine parameter exceeds normal operating range.

Copyright © The Boeing Company. See title page for details.

N2 Indications

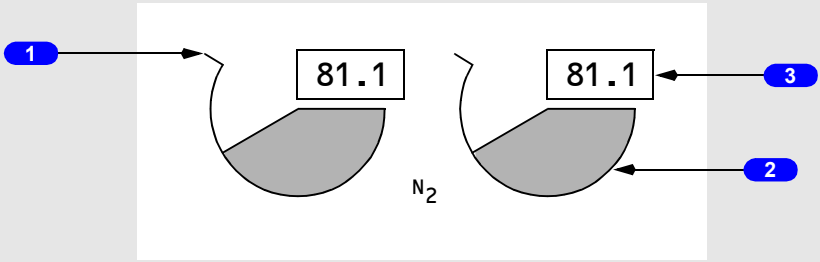

LOWER DISPLAY UNIT

1 N2 Redlines

Displayed (red) – N2% RPM operating limit.

2 N2 RPM Indications

Displays N2% RPM

- displayed (white) – normal operating range
- displayed (red) – operating limit exceeded.

3 N2 Readouts (digital)

Displayed (white) – normal operating range.

Displayed (red) –

- operating limit exceeded
- on ground, after engine shutdown, red box indicates an inflight exceedance has occurred.

Crossbleed Start Indication

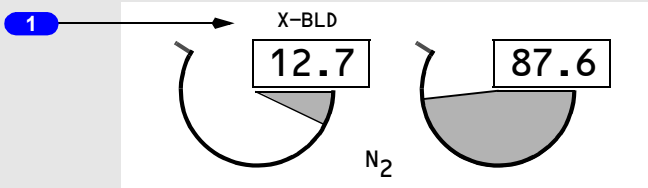

LOWER DISPLAY UNIT

1 Crossbleed Start (X–BLD) Indication

Displayed (magenta) – crossbleed air recommended for inflight start.

Copyright © The Boeing Company. See title page for details.

Displayed when airspeed is less than required for a windmilling start.

Fuel Flow/Fuel Used Indications

[Option - Over/Under display, kgs]

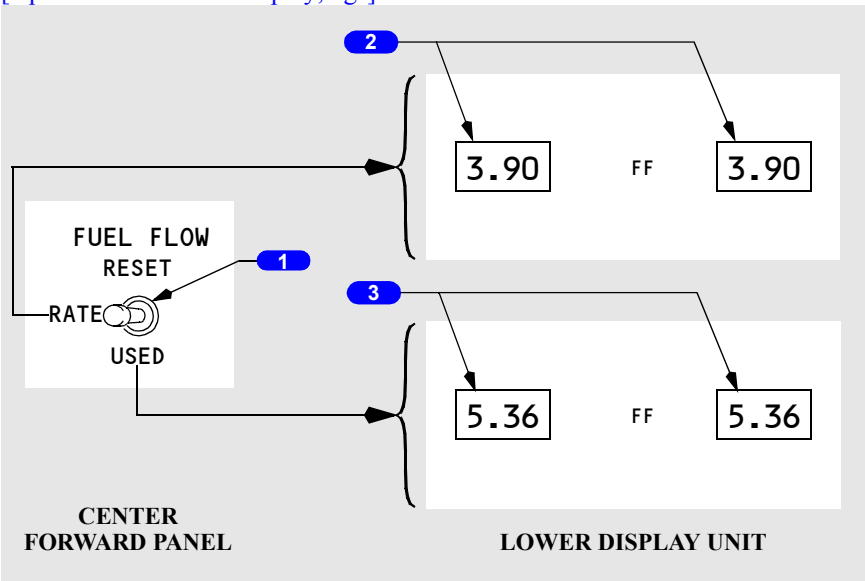

1 FUEL FLOW Switch (spring-loaded to RATE)

RATE – displays fuel flow to engine.

USED –

- displays fuel used since last reset
- after 10 seconds, display automatically reverts to fuel flow.

RESET –

- resets fuel used to zero
- displays fuel used for 1 second, decreases to zero, then displays fuel flow.

2 Fuel Flow (FF) Readout (digital)

[Option - kgs]
Displayed (white) – fuel flow to engine with FUEL FLOW switch in RATE position (kilograms per hour x 1000).

3 Fuel Used Readout (digital)

Illuminated (white) – displayed when FUEL FLOW switch moved to USED or RESET.

Copyright © The Boeing Company. See title page for details.

Oil Pressure Indications

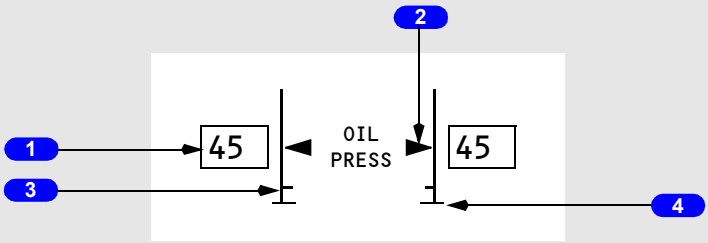

LOWER DISPLAY UNIT

1 Oil Pressure (OIL PRESS) Readout

Displays engine oil pressure (psi)

- displayed (white) – normal operating range
- displayed (amber) – caution range
- displayed (red) – operating limit reached.

2 Oil Pressure (OIL PRESS) Pointer

Displays engine oil pressure:

- displayed (white) – normal operating range
- displayed (amber) – caution range reached
- displayed (red) – operating limit reached.

3 Low Oil Pressure (OIL PRESS) Amber Band

Displayed (amber) – low oil pressure caution range beginning at red line.:

- variable depending on N2% RPM above 65% N2
- amber band not displayed below 65% N2.

4 Low Oil Pressure (OIL PRESS) Redline

Displayed (red) – oil pressure operating limit.

Copyright © The Boeing Company. See title page for details.

Oil Temperature Indications

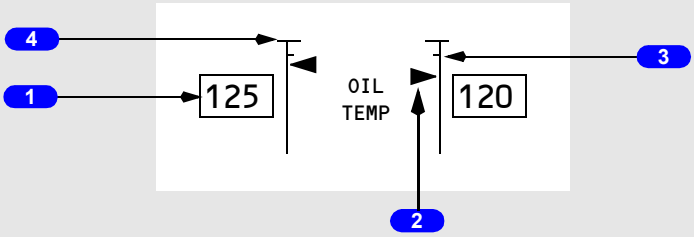

LOWER DISPLAY UNIT

1 Oil Temperature (OIL TEMP) Readout

Displays oil temperature (degrees C):

- displayed (white) – normal operating range
- displayed (amber) – caution range reached
- displayed (red) – operating limit reached.

2 Oil Temperature (OIL TEMP) Pointer

Displays oil temperature (degrees C):

- displayed (white) – normal operating range
- displayed (amber) – caution range reached
- displayed (red) – operating limit reached.

3 High Oil Temperature (OIL TEMP) Amber Band

Displayed (amber) – oil temperature caution range.

4 High Oil Temperature (OIL TEMP) Redline

Displayed (red) – oil temperature operating limit.

Oil Quantity Indications

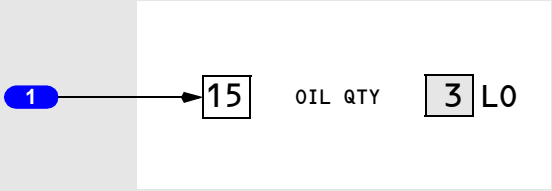

LOWER DISPLAY UNIT

Copyright © The Boeing Company. See title page for details.

1 Oil Quantity (OIL QTY) Readout

[Option - liters]
Displays usable oil quantity in liters.

Video is reversed and LO (white) displayed for low oil quantity.

Note: Indicated oil quantity may decrease significantly during engine start, takeoff and climb out. If this occurs, engine operation is not impacted and the correct oil quantity should be indicated during level flight.

Note: An oil quantity indication as low as zero is normal if windmilling N2 RPM is below approximately 8%.

Engine Vibration Indications

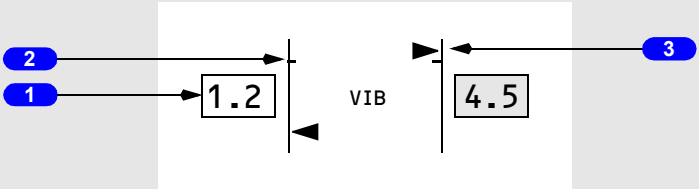

LOWER DISPLAY UNIT

1 Vibration (VIB) Readout

Displayed (white) – engine vibration level.

Video is reversed for high vibration.

2 High Limit

Displays tick mark and thick line.

3 Vibration (VIB) Pointer

Displayed (white) – engine vibration level.

Copyright © The Boeing Company. See title page for details.

Compact Engine Displays

The following changes occur to the secondary engine display in the compact engine displays.

[Option - kgs]

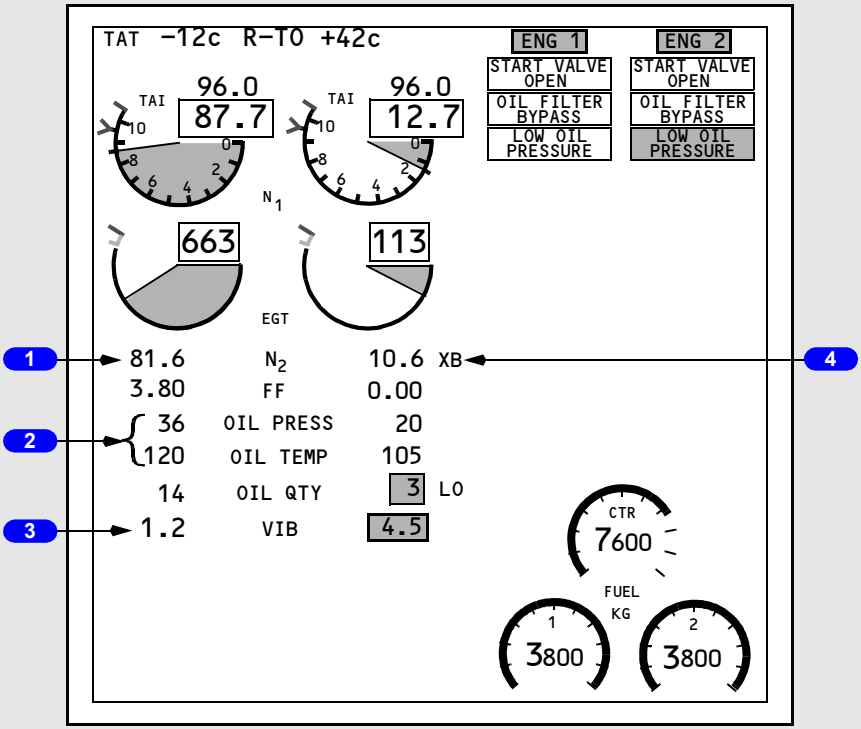

UPPER OR LOWER DISPLAY UNIT

1 N2 RPM Indications

N2 changes from round dial display to a digital display.

The digital display is framed by a red box after engine shutdown on the ground if an inflight exceedance occurred.

2 OIL PRESS, OIL TEMP Indications

Displayed as digital readouts only

The digital readouts display amber or red if limits are exceeded.

Copyright © The Boeing Company. See title page for details.

3 Vibration (VIB) Indications

Displayed as digital readout only.

4 Crossbleed Start (XB) Indications

Displayed on the side of N2

Copyright © The Boeing Company. See title page for details.

Engine Start Switches

[Option - Without automatic ignition]

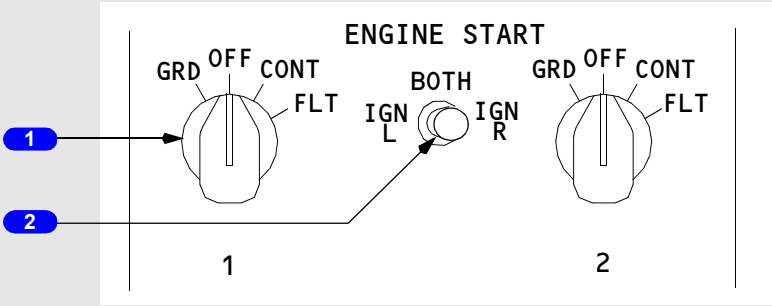

FORWARD OVERHEAD PANEL

[Option - With automatic ignition]

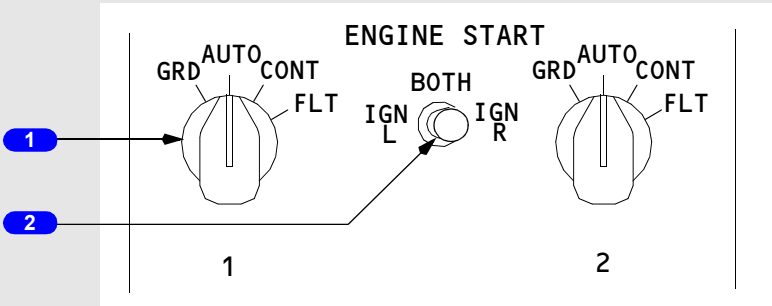

FORWARD OVERHEAD PANEL

1 ENGINE START Switches

GRD –

- opens start valve
- closes engine bleed valve
- for ground starts, arms selected igniter(s) to provide ignition when engine start lever is moved to IDLE
- for inflight starts, arms both igniters to provide ignition when engine start lever is moved to IDLE

[Option - Without automatic ignition]

- releases to OFF at start valve cutout.

Copyright © The Boeing Company. See title page for details.

DO NOT USE FOR FLIGHT

[Option - With automatic ignition]
- releases to AUTO at start valve cutout.

[Option - Without automatic ignition]
OFF –
- ignition normally off
- both igniters are activated when engine start lever is in IDLE and:
  - an uncommanded rapid decrease in N2 occurs or,
  - N2 is between 57% and 50% or,
  - in flight - N2 is between idle and 5%.

[Option - With automatic ignition]
AUTO –
- ignition normally off
- both igniters are activated when engine start lever is in IDLE and:
  - an uncommanded rapid decrease in N2 occurs or,
  - N2 is between 57% and 50% or,
  - in flight - N2 is between idle and 5%.
- provides automatic ignition to selected igniters when:
  - engine is running and,
  - flaps are not up below 18000 feet altitude or,
  - engine anti-ice is selected to ON.

CONT –
- provides ignition to selected igniters when engine is operating and engine start lever is in IDLE
- in flight - provides ignition to both igniters when N2 is below idle and engine start lever is in IDLE.

FLT – provides ignition to both igniters when engine start lever is in IDLE.

2 Ignition Select Switch

IGN L – selects the left igniter for use on both engines.

BOTH – selects both igniters for use on both engines.

IGN R – selects the right igniter for use on both engines.

Copyright © The Boeing Company. See title page for details.

Engine Display Control Panel

[Option - Side by side display]

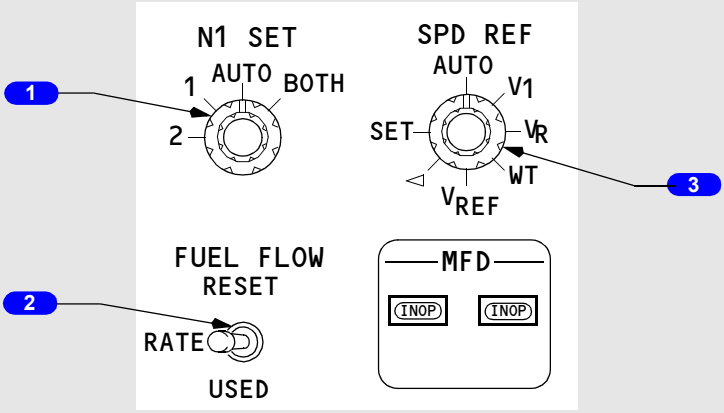

CENTER FORWARD PANEL

[Option - Over/Under display]

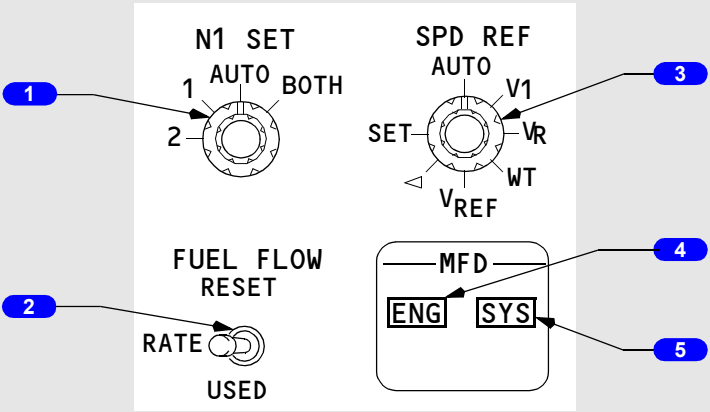

CENTER FORWARD PANEL

1 N1 SET Knob

[Option - Side by side display]
Refer to section 10, Side by Side - Displays

[Option - Over/Under display]
Refer to section 11, Over/Under - Displays

Copyright © The Boeing Company. See title page for details.

DO NOT USE FOR FLIGHT

2 FUEL FLOW Switch

[Option - Side by side display]
Refer to section 10, Side by Side - Displays

[Option - Over/Under display]
Refer to section 11, Over/Under - Displays

3 Speed Reference Selector

Refer to Chapter 10, Flight Instruments, Displays.

4 MFD Engine (ENG) Switch
[Option - Over/Under display]

Push – ENG

- displays secondary engine indications on lower DU; or if the lower DU is unavailable, on upper or inboard DU based on the position of the display select panel selector
- second push blanks lower DU.

5 MFD System (SYS) Switch
[Option - Over/Under display, flight control surface position indicator, brake temperature monitor indicator]

Refer to Chapter 13, Hydraulics; Chapter 9, Flight Controls; Chapter 14, Landing Gear.

Engine Panel

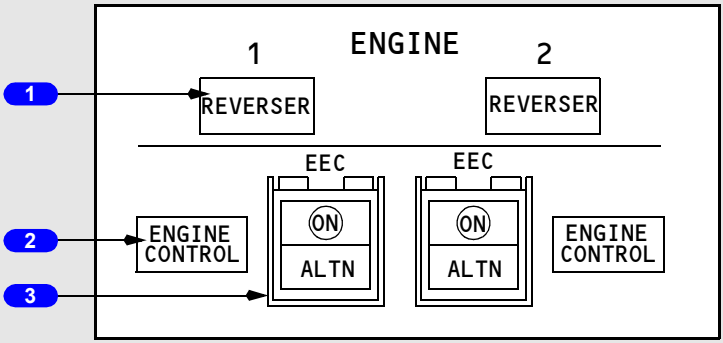

AFT OVERHEAD PANEL

Copyright © The Boeing Company. See title page for details.

1 REVERSER Lights

Illuminated (amber) – one or more of following has occurred:

- isolation valve or thrust reverser control valve is not in commanded position
- one or more thrust reverser sleeves are not in commanded state
- auto–restow circuit has been activated
- a failure has been detected in synchronization shaft lock circuitry.

2 ENGINE CONTROL Lights

Illuminated (amber) – engine control system is not dispatchable due to faults in system.

Light operates when:

- engine is operating and,
- airplane on ground and:
  - below 80 kt prior to takeoff or,
  - approximately 30 seconds after touchdown.

3 Electronic Engine Control (EEC) Switches

ON – in view (white)

- indicates normal control mode is selected
- engine ratings calculated by EEC from sensed atmospheric conditions and bleed air demand
- when ON is not in view, the EEC has been manually selected to the alternate mode.

ALTN – in view (amber)

- indicated EEC has automatically switched to alternate control mode or it has been selected manually
- EEC provides rated thrust or higher.

Note: Both ON and ALTN may be in view if EEC has automatically switched to soft alternate mode.

Note: EGT limits must be observed in both normal and alternate control modes.

Copyright © The Boeing Company. See title page for details.

DO NOT USE FOR FLIGHT

Engine Controls

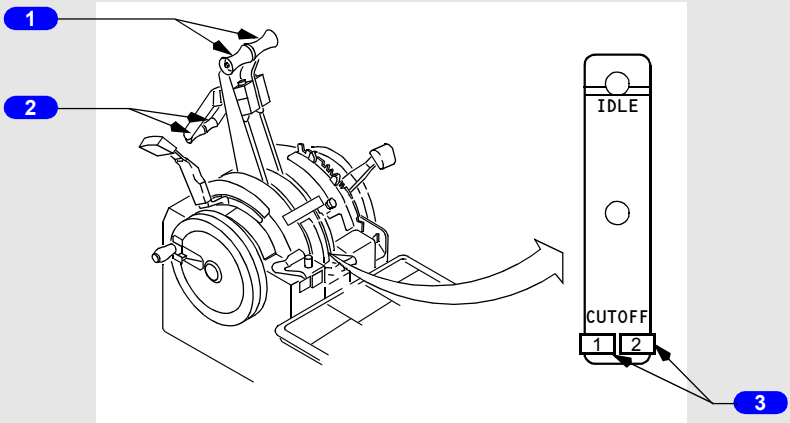

CONTROL STAND

1 Forward Thrust Levers –

- controls engine thrust
- cannot be advanced if the reverse thrust lever is in the deployed position.

2 Reverse Thrust Levers –

- controls engine reverse thrust
- cannot select reverse thrust unless related forward thrust lever is at IDLE.

Note: Reverse thrust lever is blocked at reverse idle position until related thrust reverser is more than 60% deployed.

Note: Movement of reverse thrust lever into reverse thrust engages locking pawl preventing forward thrust lever from moving. Terminating reverse thrust removes locking pawl and restores forward thrust lever movement ability.

3 Engine Start Levers

IDLE –

- energizes ignition system through EEC
- electrically opens spar fuel shutoff valve in the wing leading edge outboard of the pylon
- electrically opens engine–mounted fuel shutoff valve via the EEC.

CUTOFF –

- closes both spar and engine fuel shutoff valves
- de–energizes ignition system.

Copyright © The Boeing Company. See title page for details.

APU

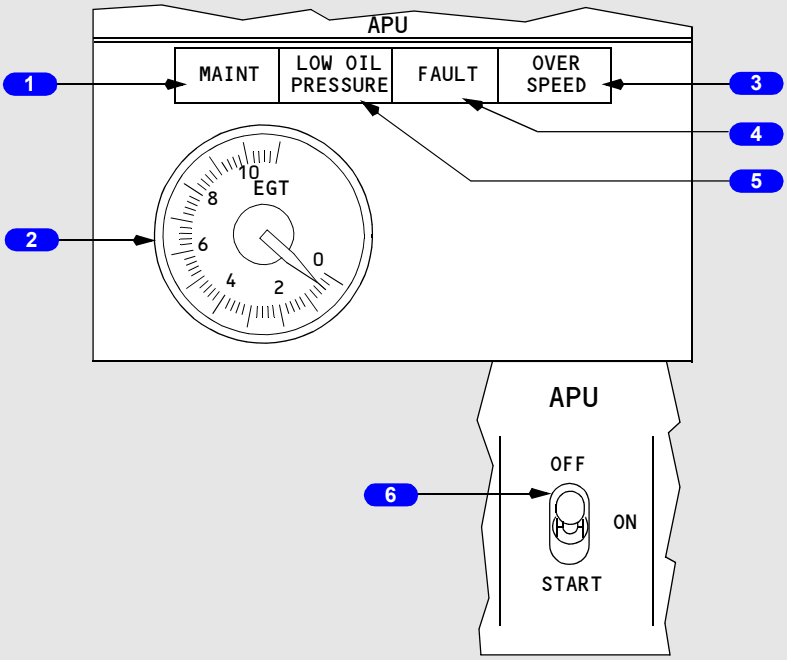

FORWARD OVERHEAD PANEL

1 APU Maintenance (MAINT) Light

Illuminated (blue) – APU maintenance problem exists:

- APU may be operated
- light is disarmed when APU switch is in OFF.

2 APU Exhaust Gas Temperature (EGT) Indicator

Displays APU EGT

EGT indicator remains powered for 5 minutes after shutdown.

3 APU OVERSPEED Light

Illuminated (amber) –

- APU RPM limit has been exceeded resulting in an automatic shutdown
- overspeed shutdown protection feature has failed a self–test during a normal APU shutdown

Copyright © The Boeing Company. See title page for details.

DO NOT USE FOR FLIGHT

- if light is illuminated when APU switch is placed to OFF, light extinguishes after 5 minutes
- light is disarmed when the APU switch is in OFF position.

4 APU FAULT Light

Illuminated (amber) –

- a malfunction exists causing APU to initiate an automatic shutdown
- if light is illuminated when APU switch is placed to OFF, light extinguishes after 5 minutes
- light is disarmed when APU switch is in OFF position.

5 APU LOW OIL PRESSURE Light

Illuminated (amber) –

- during start until the APU oil pressure is normal
- oil pressure is low causing an automatic shutdown (after start cycle is complete)
- if light is illuminated when APU switch is placed to OFF, light extinguishes after 5 minutes
- light is disarmed when APU switch is in OFF position.

6 APU Switch

OFF – normal position when APU is not running

- positioning switch to OFF with APU running trips APU generator off the bus(es), if connected, and closes APU bleed air valve. APU continues to run for a 60 second cooling period
- APU air inlet door automatically closes after shutdown.

ON – normal position when APU is running.

START (momentary) – positioning APU switch from OFF to START and releasing it to ON, initiates an automatic start sequence.

Copyright © The Boeing Company. See title page for details.

Introduction

The airplane is powered by two CFM56–7 engines. The engine is a dual–rotor, axial–flow turbofan. The N1 rotor consists of a fan, a low–pressure compressor and a low–pressure turbine. The N2 rotor consists of a high–pressure compressor and a high–pressure turbine. The N1 and N2 rotors are mechanically independent. The N2 rotor drives the engine gearboxes. A bleed–air–powered starter motor is connected to the N2 rotor.

A dual–channel electronic engine control (EEC) regulates each engine. The EEC monitors autothrottle and flight crew inputs to automatically set engine thrust.

Each engine has individual flight deck controls. Thrust is set by positioning the thrust levers. The thrust levers are positioned automatically by the autothrottle system or manually by the flight crew. The forward thrust levers control forward thrust from idle to maximum. The reverse thrust levers control thrust from reverse idle to maximum reverse.

Engine Indications

[Option - Side by side display]

Engine indications are displayed on the center instrument panel upper display unit (DU). If a failure is detected on the upper DU, the engine indications automatically shift to the lower DU. The engine indications can also be manually selected to either the Captain's or First Officer's inboard DU, or the lower DU, using the respective display select panel.

N1, EGT, N2, and FF/FU are the primary indications and are displayed as both digital readouts and round dial/moving pointer indications. N1, EGT, and N2 have operating limits indicated by redlines. EGT also displays an amber caution limit. If one of these indications exceeds the red or amber line, the digital readout, box, pointer, and indicator change color to red or amber.

Oil pressure, oil temperature, oil quantity, and engine vibration are the secondary engine indications. Oil pressure and oil temperature indications are displayed with a round dial/moving pointer. Operating and caution ranges are displayed with red and amber lines. If the red or amber line is reached, the pointer changes color to red or amber for that indication. The oil quantity indicator displays a digital readout of quantity as a percent of full.

Engine vibration indications are displayed with a round dial/moving pointer.

Copyright © The Boeing Company. See title page for details.

The EEC must receive electrical power to supply engine operating data to the flight deck engine indications. When the EEC is not powered, N1, N2, oil quantity and engine vibration are displayed directly from the engine sensors. Positioning the engine start switch to GRD supplies electrical power to the EEC and displays pointers/digits for all engine parameters.

During battery start with no power on the airplane, only N1, N2, and oil quantity are available. The EEC is not powered until the engine accelerates to a speed greater than 15% N2. At 15% N2, the EEC becomes energized and pointers/digits for all engine parameters are displayed.

An engine failure alert indication (ENG FAIL) is displayed in amber on the EGT indicator when the respective engine is operating at a condition below sustainable idle (50% N2) and the engine start lever is in the IDLE position. The alert remains until the engine recovers, the engine start lever is moved to CUTOFF, or the engine fire warning switch is pulled.

Engine Indications

[Option - Over/Under display]

Primary and secondary engine indications are provided. Engine indications are displayed on the center forward panel upper display unit (DU), lower DU or the Captain's or First Officer's inboard DU.

Primary Engine Indications

N1 and EGT are the primary engine indications. The primary engine indications are normally displayed on the center forward panel upper DU. If that unit fails, the display automatically moves to the lower DU. The primary engine indications can also be manually selected to either the Captain's or First Officer's inboard DU, or the lower DU, using the respective display select panel.

Secondary Engine Indications

[Option - Fuel flow displayed full time]

N2, fuel flow, oil pressure, oil temperature, oil quantity, and engine vibration are the secondary engine indications. The secondary engine indications, except for fuel flow, are manually selected to either the Captain's or First Officer's inboard DU, or the lower DU, using the respective display select panel and the ENG switch on the engine display control panel. Fuel flow is displayed full time on the upper display unit below the primary engine indications.

The secondary engine indications are automatically displayed when:

- the displays initially receive electrical power
- in flight when an engine start lever is moved to CUTOFF
- in flight when an engine N2 RPM is below idle
- a secondary engine parameter is exceeded.

Copyright © The Boeing Company. See title page for details.

When the secondary engine indications are automatically displayed, they cannot be cleared until the condition is no longer present.

Normal Display Format

N1, EGT, and N2 are displayed as both digital readouts and round dial/moving pointer indications. The digital readouts display numerical values while the moving pointers indicate relative value.

Oil pressure, oil temperature, and engine vibration indications are both digital readouts and vertical indication/moving pointers. Fuel flow and oil quantity are digital readouts only. All digital readouts are enclosed by boxes.

The dials and vertical indications display the normal operating range, caution range, and operating limits.

Normal operating range is displayed on a dial or vertical indication in white.

N1, EGT, and N2 have operating limits indicated by redlines. EGT also displays an amber caution limit. If one of these indications exceeds the red or amber line, the digital readout, box, pointer, and indicator change color to red or amber.

The oil temperature and oil pressure vertical indications have a caution range and an operating limit redline. If the oil temperature or pressure reaches the caution range, the digital readout, digital readout box, and pointer all change color to amber. If one of these indications reach the operating limit, the digital readout, digital readout box, and pointer all change color to red.

The EEC must receive electrical power to supply engine operating data to the flight deck engine indications. When the EEC is not powered, N1, N2, oil quantity and engine vibration are displayed directly from the engine sensors. Positioning the engine start switch to GRD supplies electrical power to the EEC and displays pointers/digits for all engine parameters.

During battery start with no power on the airplane, only N1, N2, and oil quantity are available. The EEC is not powered until the engine accelerates to a speed greater than 15% N2. At 15% N2, the EEC becomes energized and pointers/digits for all engine parameters are displayed.

An engine failure alert indication (ENG FAIL) is displayed in amber on the EGT indicator when the respective engine is operating at a condition below sustainable idle (50% N2) and the engine start lever is in the IDLE position. The alert remains until the engine recovers, the engine start lever is moved to CUTOFF, or the engine fire warning switch is pulled.

Copyright © The Boeing Company. See title page for details.

Compact Display

In compact format, the primary and secondary engine indications are combined on the same display. The N1 and EGT indications are displayed as they are normally. All other indications change to digital readouts only. N2, oil temperature, and oil pressure digital readouts turn red or amber if an exceedance occurs. The N2 digital display is framed with a red box after engine shutdown on the ground if an inflight exceedance occurred.

Primary and secondary engine indications are displayed in compact format on the upper DU when the secondary engine indications are selected for display (manually or automatically) and the lower DU is unavailable. Alternatively, the compacted indications are displayed on the lower DU if the upper DU is unavailable.

Electronic Engine Control (EEC)

Each engine has a full authority digital EEC. Each EEC has two independent control channels, with automatic channel transfer if the operating channel fails. With each engine start or start attempt, the EEC alternates between control channels. The EEC uses thrust lever inputs to automatically control forward and reverse thrust. N1 is used by the EEC to set thrust in two control modes: normal and alternate. Manual selection of the control mode can be made with the EEC switches on engine panel.

EEC Normal Mode

In the normal mode, the EEC uses sensed flight conditions and bleed air demand to calculate N1 thrust ratings. The EEC compares commanded N1 to actual N1 and adjusts fuel flow to achieve the commanded N1.

The full rated takeoff thrust for the installed engine is available at a thrust lever position less than the forward stop. Fixed or assumed temperature derated takeoff thrust ratings are set at thrust lever positions less than full rated takeoff. If the thrust lever is advanced to the forward stop, the EEC limits thrust to the maximum thrust rating offered for the airplane model.

The standard reserve thrust rating available at the forward stop varies according to fleet configuration as follows:

[737-600]
- CFM56-7B22 rating

[737-700]
- CFM56-7B24 rating

[737-800/900, BBJ/BBJ-2]
- CFM56-7B27 rating

Copyright © The Boeing Company. See title page for details.

Takeoff Bump Thrust
[Option - Takeoff bump thrust]

Takeoff bump thrust is available when increased thrust is needed for takeoff, above the normal maximum takeoff thrust setting. When selected using the FMC N1 LIMIT page, takeoff thrust is increased by either the flight crew or the autothrottle positioning the thrust levers to set N1 to the reference N1 bug. Bump thrust applies only to the takeoff rating; maximum climb, maximum continuous and go-around thrust ratings are not affected.

Airplanes equipped with a takeoff thrust bump have a reserve thrust capability which is greater than the standard values listed under the EEC Normal Mode listed above. Use of this reserve thrust capability is intended for emergency use only in the event of wind shear or impending ground contact.

FMC selection of takeoff bump thrust can be configured as either “Bump Option” or a “Full-Rate Option.” When configured as a FMC “Bump Option”, the default takeoff rating is lower then takeoff bump, and the takeoff bump must be activated via the FMC-CDU. With this “Bump Option” configuration, assumed temperature engine derates are not available from the bump. When configured as a FMC “Full-Rate Option”, the default takeoff rating is the takeoff bump. With this full-rate option, the assumed temperature engine derate method may always be used. With this “Full-Rate Option” configuration, the ability to select the lowest normally offered takeoff fixed derate is lost.

EEC Alternate Mode

The EEC can operate in either of two alternate modes, soft or hard. If required signals are not available to operate in the normal mode, the EEC automatically changes to the soft alternate mode. When this occurs, the ALTN switch illuminates and the ON indication remains visible. In the soft alternate mode, the EEC uses the last valid flight conditions to define engine parameters which allows the mode change to occur with no immediate change in engine thrust. Thrust rating shortfalls or exceedances may occur as flight conditions change. The soft alternate mode remains until the hard alternate mode is entered by either retarding the thrust lever to idle or manually selecting ALTN with the EEC switch on the aft overhead panel.

Note: Loss of either DEU results in a loss of signal to both EECs. The EEC ALTN lights illuminate and each EEC reverts to the alternate mode to prevent the engines from operating on a single source of data.

Copyright © The Boeing Company. See title page for details.

When the hard alternate mode is entered, the EEC reverts to the alternate mode thrust schedule. Hard alternate mode thrust is always equal to or greater than normal mode thrust for the same lever position. If the hard alternate mode is entered by reducing the thrust lever to idle while in the soft alternate mode, the ALTN switch remains illuminated and the ON indication remains visible. When ALTN is selected manually, the ON indication is blanked.

Structural Limit Protection

The EEC provides N1 and N2 redline overspeed protection in both normal and alternate modes. The EGT limit must be observed by the crew because the EEC does not provide EGT redline exceedance protection.

Idle Operation

The EEC automatically selects ground minimum idle, flight minimum idle, and approach idle. Ground minimum idle is selected for ground operations and flight minimum idle is selected for most phases of flight. Approach idle is selected in flight if flaps are in landing configuration or engine anti–ice is ON for either engine. At the same airspeed and altitude, N1 and N2% RPM will be higher for approach idle than for flight minimum idle. This higher% RPM improves engine acceleration time in the event of a go–around. Approach idle is maintained until after touchdown, when ground minimum idle is selected. In flight, if a fault prevents the EEC from receiving flap or anti–ice signals, approach idle schedule begins below 15,000 feet MSL.

Copyright © The Boeing Company. See title page for details.

Power Plant Schematic

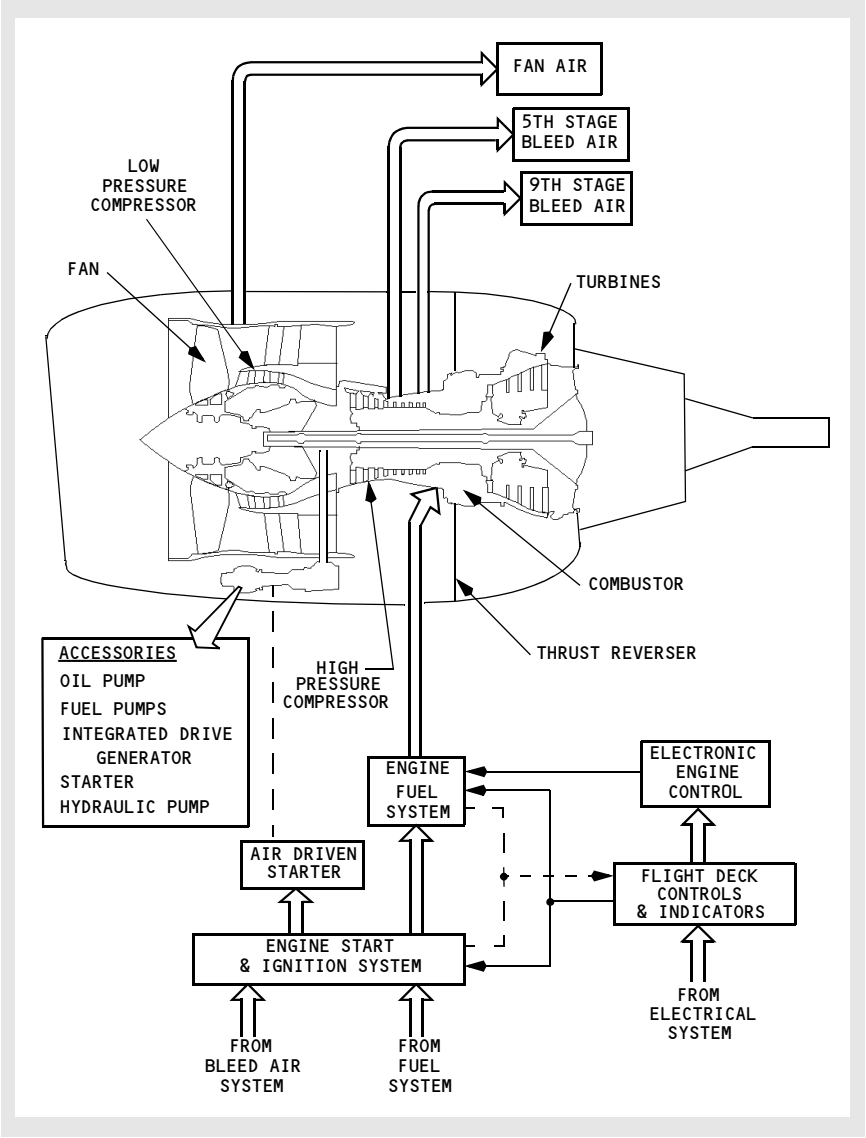

Copyright © The Boeing Company. See title page for details.

DO NOT USE FOR FLIGHT

Engine Fuel System

Fuel is delivered under pressure from fuel pumps located in the fuel tanks. The fuel flows through a fuel spar shutoff valve located at the engine mounting wing stations. The fuel passes through the first stage engine fuel pump where pressure is increased. It then passes through two fuel/oil heat exchangers where IDG oil and main engine oil heat the fuel. A fuel filter then removes contaminants. Fuel automatically bypasses the filter if the filter becomes saturated. Before the fuel bypass occurs, the fuel FILTER BYPASS alert illuminates on the fuel control panel. The second stage engine fuel pump adds more pressure before the fuel reaches the hydro mechanical unit (HMU). To meet thrust requirements, the EEC meters fuel through the HMU.

The spar fuel shutoff valve and engine fuel shutoff valve allow fuel flow to the engine when both valves are open. The valves are open when the engine fire warning switch is in and the start lever is in IDLE. Both valves close when either the start lever is in CUTOFF or the engine fire warning switch is out. SPAR VALVE CLOSED and ENG VALVE CLOSED lights located on the overhead panel indicate valve position.

Fuel flow is measured after passing through the engine fuel shutoff valve and is displayed on the display unit. Fuel flow information is also provided to the FMS.

Engine Oil System

Oil from the individual engine tank is circulated under pressure, through the engine to lubricate the engine bearings and accessory gearbox. The oil quantity indicator, oil temperature indicator, oil pressure indicator and LOW OIL PRESSURE alert are all located on the display unit.

The oil system is pressurized by the engine driven oil pump. Oil from the pump, goes to the engine bearings and gearbox. Sensors for the oil temperature indicator, oil pressure indicator and LOW OIL PRESSURE alert are located downstream of the oil pump prior to engine lubrication.

Oil is returned to the oil tank by engine driven scavenge pumps. From the scavenge pumps oil passes through a scavenge filter. If the filter becomes saturated with contaminants, oil automatically bypasses the filter. Prior to the oil bypassing the scavenge filter, the OIL FILTER BYPASS alert illuminates on the upper display unit.

Prior to returning to the oil tank, the oil passes through the main engine oil cooler where it is cooled by engine fuel to maintain proper oil temperature.

Copyright © The Boeing Company. See title page for details.

Engine Fuel and Oil System Schematic

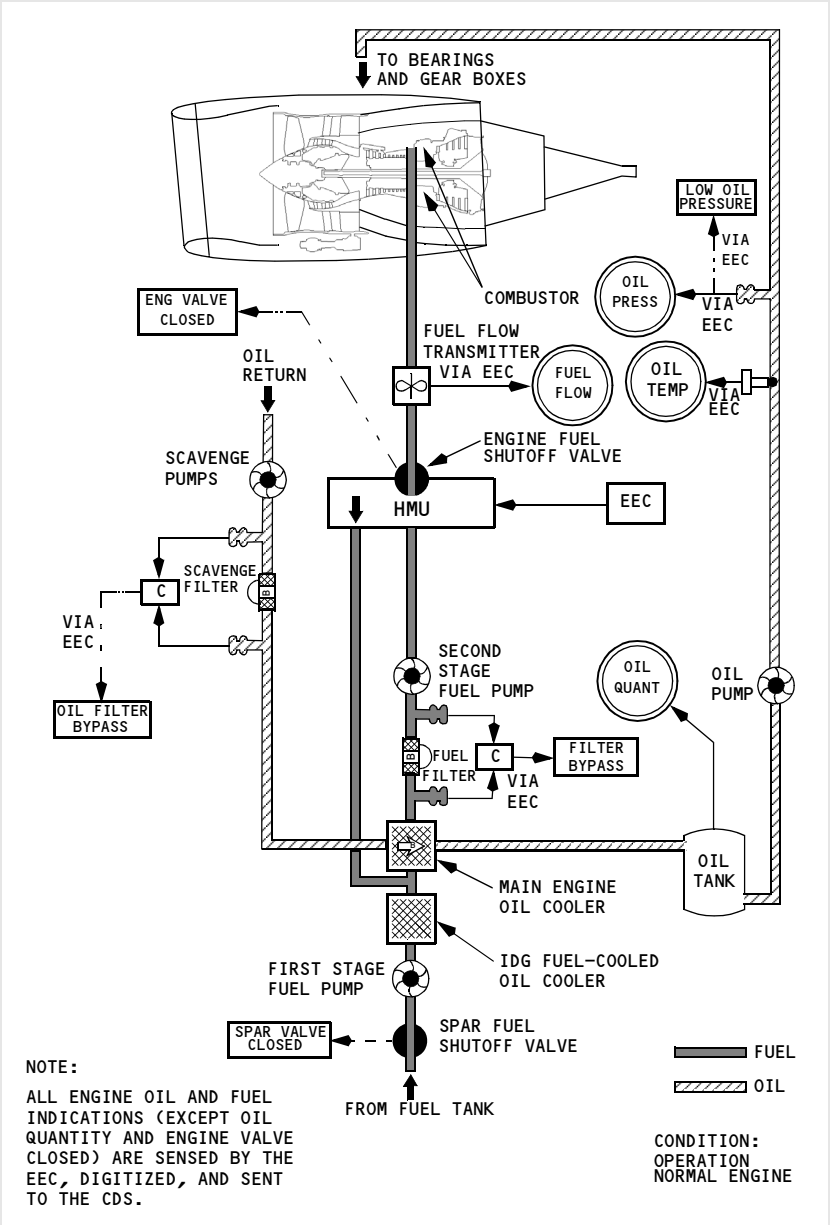

Copyright © The Boeing Company. See title page for details.

Engine Start System

Starter operation requires pressurized air and electrical power. Air from the bleed air system powers the starter motor. The APU, an external ground cart, or the other operating engine provides the bleed air source.

In the GRD position, the engine start switch uses battery power to close the engine bleed air valve and open the start valve to allow pressure to rotate the starter. When the start valve opens, an amber START VALVE OPEN alert is provided on the upper display unit. The starter rotates the N2 compressor through the accessory drive gear system. When the engine accelerates to the recommended value (25% N2 or max motoring), moving the engine start lever to the IDLE position opens the fuel valves on the wing spar and engine, and causes the EEC to supply fuel and ignition to the combustor where the fuel ignites. Initial fuel flow indications lag actual fuel flow by approximately two seconds, therefore, during engine start, an EGT rise may occur before fuel flow indication.

[Option - Without automatic ignition]
At starter cutout speed (approximately 56% N2), power is removed from the start switch holding solenoid. The engine start switch returns to OFF, the engine bleed air valve returns to the selected position, and the start valve closes.

[Option - With automatic ignition]
At starter cutout speed (approximately 56% N2), power is removed from the start switch holding solenoid. The engine start switch returns to AUTO, the engine bleed air valve returns to the selected position, and the start valve closes.

Abnormal Start Protection (Ground Starts Only)

During ground starts, the EEC monitors engine parameters to detect impending hot starts, EGT start limit exceedances, and wet starts. These protection features do not function during inflight starts.

If an impending hot start is detected by a rapid rise in EGT or EGT approaching the start limit, the white box surrounding the EGT digital readout flashes. The flashing white box resets when the start lever is moved to CUTOFF or the engine reaches idle N2.

If the EGT exceeds the starting limit, the EGT display, both box and dial, turn red. The EEC automatically turns off the ignition and shuts off fuel to the engine. The alert terminates and the display returns to white when EGT drops below the start limit. Following engine shutdown, the EGT box turns red to remind the crew of the exceedance.

A wet start occurs if the EGT does not rise after the start lever is moved to IDLE. If a wet start is detected, the EEC turns off the ignition and shuts off fuel to the engine 15 seconds after the start lever is moved to IDLE.

Copyright © The Boeing Company. See title page for details.

Engine Ignition System

Each engine has two igniter plugs. The EEC arms the igniter plug(s) selected by the ignition select switch. The left igniter plug receives power from the associated AC transfer bus. The right igniter plug receives power from the AC standby bus.

Auto-Relight

An auto-relight capability is provided for flameout protection. Whenever the EEC detects an engine flameout, both igniters are activated. A flameout is detected when an uncommanded rapid decrease in N2 occurs, or N2 is below idle RPM.

Inflight Starting

Two methods of starting an engine inflight are available, windmill and crossbleed. None of the ground start protection features are functional during inflight start.

Note: At low N2 values, the oil scavenge pump may not provide enough pressure to return oil to the tank, causing a low oil quantity indication. Normal oil quantity should be indicated after start.

[Option - Side by side display]
If crossbleed starting is required, the X–BLD START indication is displayed above the N2 dial. This indication is based on airplane altitude, airspeed and N2.

[Option - Over/Under display]
If crossbleed starting is required, the X–BLD indication (XB for the compact engine display) is displayed above the N2 dial. This indication is based on airplane altitude, airspeed and N2.

Copyright © The Boeing Company. See title page for details.

Engine Start and Ignition System Schematic

[Option - Without automatic ignition]

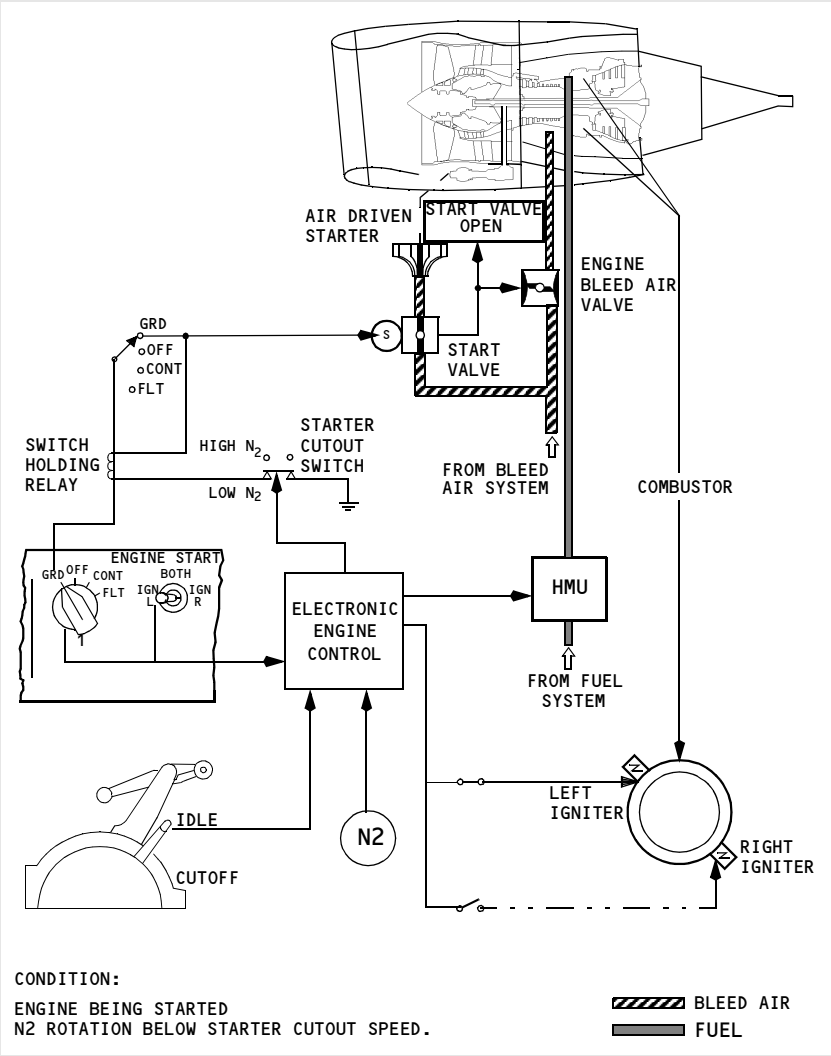

Copyright © The Boeing Company. See title page for details.

[Option - With automatic ignition]

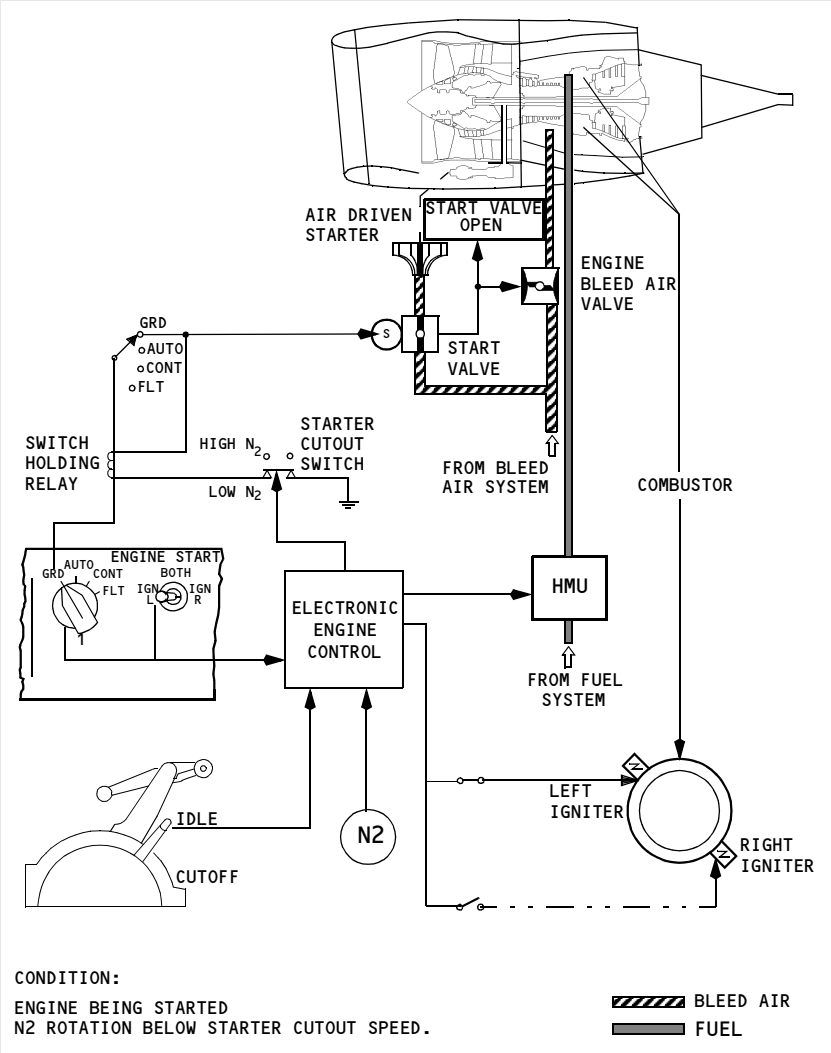

Copyright © The Boeing Company. See title page for details.

Thrust Reverser

Each engine is equipped with a hydraulically operated thrust reverser, consisting of left and right translating sleeves. Aft movement of the reverser sleeves causes blocker doors to deflect fan discharge air forward, through fixed cascade vanes, producing reverse thrust. The thrust reverser is for ground operations only and is used after touchdown to slow the airplane, reducing stopping distance and brake wear.

Hydraulic pressure for the operation of engine No. 1 and engine No. 2 thrust reversers comes from hydraulic systems A and B, respectively. If hydraulic system A and/or B fails, alternate operation for the affected thrust reverser is available through the standby hydraulic system. When the standby system is used, the affected thrust reverser deploys and retracts at a slower rate and some thrust asymmetry can be anticipated.

The thrust reverser can be deployed when either radio altimeter senses less than 10 feet altitude, or when the air/ground safety sensor is in the ground mode. Movement of the reverse thrust levers is mechanically restricted until the forward thrust levers are in the idle position.

When reverse thrust is selected, an electro–mechanical lock releases, the isolation valve opens and the thrust reverser control valve moves to the deploy position, allowing hydraulic pressure to unlock and deploy the reverser system. An interlock mechanism restricts movement of the reverse thrust lever until the reverser sleeves have approached the deployed position. When either reverser sleeve moves from the stowed position, the amber REV indication, located on the upper display unit, illuminates. As the thrust reverser reaches the deployed position, the REV indication illuminates green and the reverse thrust lever can be raised to detent No. 2. This position provides adequate reverse thrust for normal operations. When necessary, the reverse thrust lever can be pulled beyond detent No. 2, providing maximum reverse thrust.

Downward motion of the reverse thrust lever past detent No. 1 (reverse idle thrust) initiates the command to stow the reverser. When the lever reaches the full down position, the control valve moves to the stow position allowing hydraulic pressure to stow and lock the reverser sleeves. After the thrust reverser is stowed, the isolation valve closes and the electro–mechanical lock engages.

Copyright © The Boeing Company. See title page for details.

The REVERSER light, located on the aft overhead panel, illuminates when the thrust reverser is commanded to stow and extinguishes 10 seconds later when the isolation valve closes. Any time the REVERSER light illuminates for more than approximately 12 seconds, a malfunction has occurred and the MASTER CAUTION and ENG system annunciator lights illuminate.

Note: A pause in movement of the reverse thrust levers past detent No. 1 toward the stow position may cause MASTER CAUTION and ENG system annunciator lights to illuminate. A pause of approximately 16 seconds engages the electro-mechanical lock and prevents the thrust reverser sleeves from further movement. Cycling the thrust reversers may clear the fault and restore normal operation.

When the reverser sleeves are in the stow position, an electro–mechanical lock and a hydraulically operated locking actuator inhibit motion to each reverser sleeve until reverser extension is selected. Additionally, an auto–restow circuit compares the actual reverser sleeve position and the commanded reverser position. In the event of incomplete stowage or uncommanded movement of the reverser sleeves toward the deployed position, the auto–restow circuit opens the isolation valve and commands the control valve to the stow position directing hydraulic pressure to stow the reverser sleeves. Once the auto–restow circuit is activated, the isolation valve remains open and the control valve is held in the stowed position until the thrust reverser is commanded to deploy or until corrective maintenance action is taken.

WARNING: Actuation of the thrust reversers on the ground without suitable precautions is dangerous to ground personnel.

Copyright © The Boeing Company. See title page for details.

DO NOT USE FOR FLIGHT

Thrust Reverser Schematic

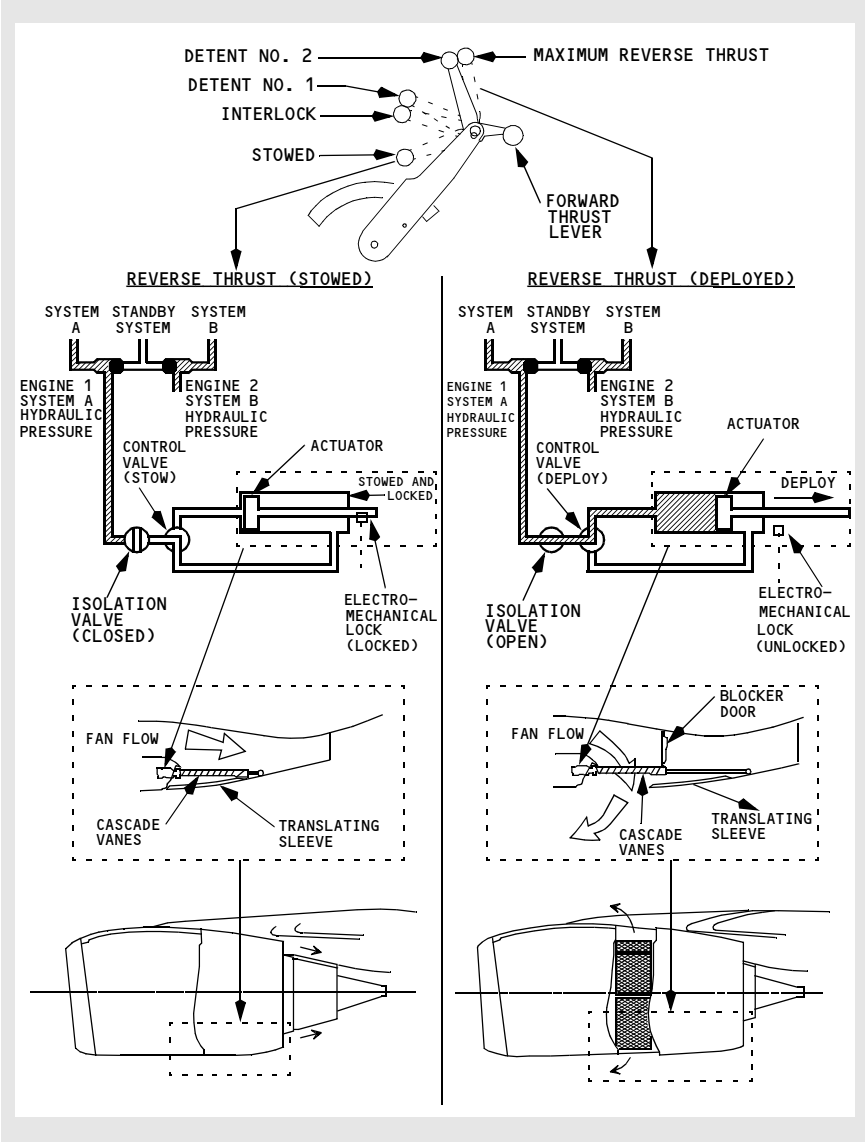

Copyright © The Boeing Company. See title page for details.

DO NOT USE FOR FLIGHT

Introduction

The auxiliary power unit (APU) is a self–contained gas turbine engine installed within a fireproof compartment located in the tail of the airplane.

The APU supplies bleed air for engine starting or air conditioning. An AC electrical generator on the APU provides an auxiliary AC power source.

APU Location

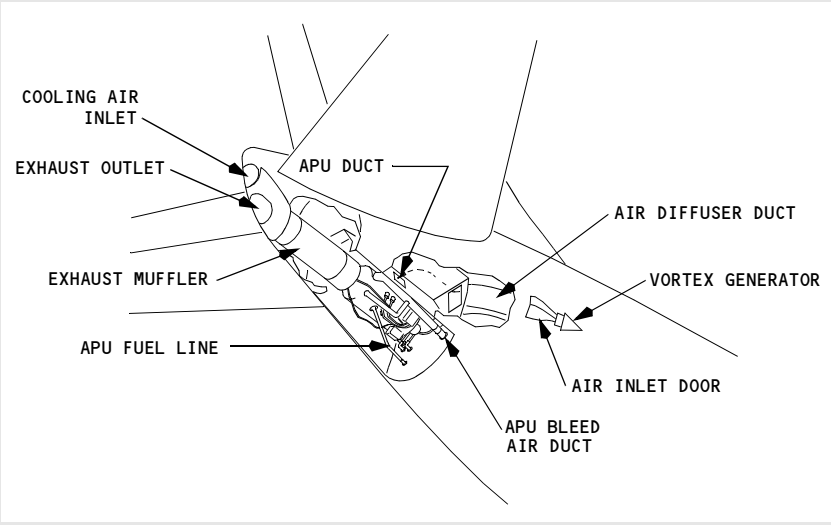

APU Operation

The APU starts and operates up to the airplane maximum certified altitude.

The APU supplies bleed air for both air conditioning packs on the ground or one pack in flight. Both transfer busses can be powered on the ground or in flight.

Copyright © The Boeing Company. See title page for details.

APU Fuel Supply

[Option - APU DC fuel boost pump]
Fuel to start and operate the APU comes from the left side of the fuel manifold when the AC fuel pumps are operating. A DC operated APU fuel boost pump is installed to ensure positive fuel pressure to the APU fuel control unit. During APU start and operation, the pump operates automatically when the APU fuel control unit senses low fuel pressure. The pump shuts off automatically when an AC fuel pump pressurizes the fuel manifold. If the AC and DC fuel pumps are not operating, fuel is suction fed from the No. 1 tank. During APU operation, fuel is automatically heated to prevent icing.

APU Engine and Cooling Air

APU engine air routes to the APU through an automatically operated air inlet door located on the right side of the fuselage. APU exhaust gases discharge overboard through an exhaust muffler.

Air for APU cooling enters through a cooling air inlet above the APU exhaust outlet. This air circulates through the APU compartment, passes through the oil cooler and vents through the exhaust outlet.

Electrical Requirements for APU Operation

APU operation requires the following:

- APU fire switch on the overheat/fire panel must be IN
- APU fire control handle on the APU ground control panel must be IN
- battery switch must be ON.

Electrical power to start the APU comes from No. 1 transfer bus or the airplane battery(ies). With AC power available, the starter generator uses AC power to start the APU. With no AC power, the starter generator uses battery power to start the APU.

Moving the battery switch to OFF on the ground or in the air automatically shuts down the APU because of power loss to the electronic control unit.

APU Start

The automatic start sequence begins by moving the APU switch momentarily to START. This initiates opening of the air inlet door. When the APU inlet door reaches the full open position the start sequence begins. After the APU reaches the proper speed, ignition and fuel are provided. When the APU is ready to accept a bleed air or electrical load the APU GEN OFF BUS light illuminates.

Note: When the APU is started using battery power only, there is no indication on the electrical metering panel that the APU generator has come on line and is ready to be selected. Both the frequency and voltage readings are zero until the APU generator is placed on line.

Copyright © The Boeing Company. See title page for details.

If the APU does not reach the proper speed with the proper acceleration rate within the time limit of the starter, the start cycle automatically terminates. The start cycle may take as long as 120 seconds. Automatic shutdown occurs in the event of EGT exceedance.

If the start fails or the APU GEN OFF BUS light fails to illuminate by the end of the start cycle, a system failure has occurred and the FAULT light illuminates.

Operate the APU for one full minute before using it as a bleed air source. This one minute stabilization is recommended to extend the service life of the APU.

APU Shutdown

Operate the APU for one full minute with no bleed air load prior to shutdown. This cooling period is recommended to extend the service life of the APU. When the APU switch is moved to OFF, this time delay is met automatically.

Moving the APU switch to OFF trips the APU generator, closes the APU bleed air valve and extinguishes the APU GEN OFF BUS light. Shutdown occurs automatically after 60 seconds. When the APU speed decreases sufficiently during shutdown, the fuel valve and inlet door close. If the fuel valve does not close, the FAULT light will illuminate after approximately 30 seconds. An immediate shutdown can be accomplished by pulling the APU fire switch.

Electronic Control Unit (ECU)

An electronic control unit (ECU) monitors and controls the APU. Automatic shutdown protection is provided for overspeed conditions, low oil pressure, high oil temperature, APU fire, fuel control unit failure, EGT exceedance, and other system faults monitored by the ECU.

The ECU automatically controls APU speed through the electronic fuel control. If speed or EGT exceed acceptable levels with the APU providing electrical load only, some electrical load is shed. When electrical load and air extraction raise the EGT above acceptable levels during engine starting, electrical load shedding occurs prior to reducing bleed air. When electrical load and air extraction raise the EGT above acceptable levels other than during engine starting, the inlet guide vanes move toward a closed position, reducing bleed air extraction while maintaining electrical load.

APU Automatic Load Shedding

In flight, if the APU is the only source of electrical power, all galley busses are automatically shed. If electrical load still exceeds design limits, both main busses automatically shed until the load is within design limits. On the ground, the APU attempts to carry a full electrical load. If an overload condition is sensed, the APU sheds galley busses first, and then both main busses until the load is within limits.

Copyright © The Boeing Company. See title page for details.

DO NOT USE FOR FLIGHT

Intentionally
Blank

Copyright © The Boeing Company. See title page for details.

DO NOT USE FOR FLIGHT

Controls and Indicators 8.10.1

Overheat/Fire Protection Panel Switches 8.10.1
Overheat/Fire Protection Panel Lights 8.10.3
Cargo Fire Panel 8.10.4
Master Fire Warning Light 8.10.6
APU Ground Control Panel 8.10.7
Lavatory Fire. 8.10.8

System Description 8.20.1

Introduction. 8.20.1
Engine Fire Protection 8.20.1
Engine Overheat and Fire Detection 8.20.1
Engine Fire Extinguishing 8.20.2
Engine Fire Extinguisher Schematic 8.20.3
APU Fire Protection 8.20.4
APU Fire Detection 8.20.4
APU Fire Extinguishing 8.20.4
Main Wheel Well Fire Protection 8.20.5
Main Wheel Well Fire Detection 8.20.5
Cargo Compartment Fire Protection 8.20.5
Cargo Compartment Smoke Detection 8.20.5
Cargo Compartment Fire Warning. 8.20.5
Cargo Compartment Fire Extinguishing 8.20.6
Cargo Fire Extinguisher Schematic 8.20.6
Lavatory Fire Protection 8.20.6
Lavatory Smoke Detection 8.20.6
Lavatory Fire Extinguisher System 8.20.7
Fire and Overheat System Tests 8.20.7
FAULT/INOP Test Detection. 8.20.7
OVERHEAT/FIRE Test Detection 8.20.7

Copyright © The Boeing Company. See title page for details.

Extinguisher Test 8.20.8
Cargo Fire System Tests 8.20.8
Cargo Fire TEST 8.20.8
Cargo Fire Extinguisher Test 8.20.8

Copyright © The Boeing Company. See title page for details.

Overheat/Fire Protection Panel Switches

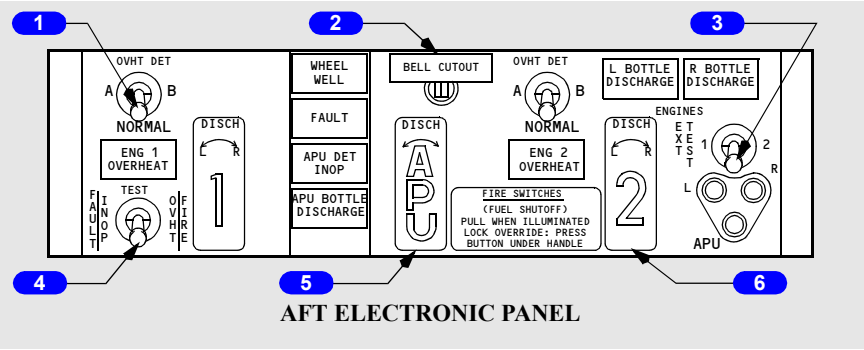

AFT ELECTRONIC PANEL

1 Overheat Detector (OVHT DET) Switch

NORMAL – detection loop A and loop B are active.

A – detection loop A is active.

B – detection loop B is active.

2 Fire Warning BELL CUTOUT Switch

Push –

- extinguishes both master FIRE WARN lights
- silences the fire warning bell
- silences the remote APU fire warning horn (on the ground only)
- resets the system for additional warnings.

3 Extinguisher (EXT) TEST Switch

(spring–loaded to center)

1 or 2 – tests bottle discharge circuits for all three extinguisher bottles.

4 Fault/Inoperative (FAULT/INOP) and Overheat/Fire (OVHT/FIRE) TEST Switch

(spring–loaded to center)

FAULT/INOP – tests fault detection circuits for both engines and the APU.

Copyright © The Boeing Company. See title page for details.

OVHT/FIRE – tests overheat and fire detection loops on both engines and APU, and wheel well fire detector

Note: See Fire and Overheat Detection System Fault Test in Section 20.

5 APU Fire Warning Switch

Illuminated (red) –

- indicates fire in APU
- unlocks APU fire warning switch.

Note: Master FIRE WARN lights illuminate, fire warning bell sounds, and in the main wheel well the APU fire warning horn sounds (on ground only), and APU fire warning light flashes.

In – normal position, mechanically locked if no fire signal.

Up –

- arms APU extinguisher circuit
- closes fuel shutoff valve, APU bleed air valve, and APU inlet door
- trips generator control relay and breaker
- allows APU fire warning switch to rotate.

Rotate (left or right) –

- discharges APU fire bottle.

6 Engine Fire Warning Switch

Illuminated (red) –

- indicates fire in related engine
- unlocks related engine fire warning switch.

Note: Master FIRE WARN lights illuminate and fire warning bell sounds.

In – normal position, mechanically locked if no fire signal.

Up –

- arms one discharge squib on each engine fire extinguisher
- closes fuel, hydraulic shutoff and engine bleed air valves
- disables thrust reverser
- trips generator control relay and breaker
- deactivates engine driven hydraulic pump LOW PRESSURE light
- allows engine fire warning switch to rotate.

Rotate (left or right) – discharges related fire bottle.

Copyright © The Boeing Company. See title page for details.

Fire Warning Switch Override

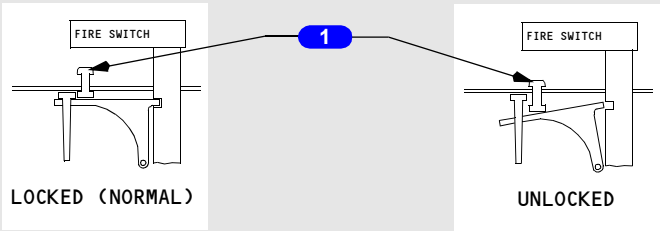

AFT ELECTRONIC PANEL

1 Fire Warning Switch Override

Push – unlocks fire warning switch.

Overheat/Fire Protection Panel Lights

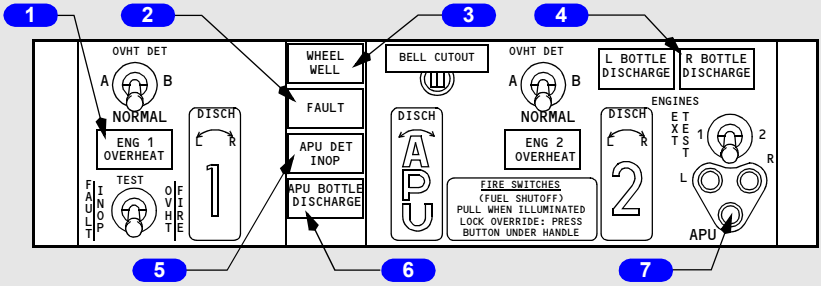

AFT ELECTRONIC PANEL

1 Engine (ENG) OVERHEAT Light

Illuminated (amber) – indicates overheat in related engine.

Note: MASTER CAUTION and OVHT/DET system annunciator lights illuminate.

2 FAULT Light

Illuminated (amber) – with the overheat detector switch in NORMAL - indicates both detector loops for an engine have failed.

Illuminated (amber) – with the overheat detector switch in A or B – indicates the selected loop for an engine has failed.

Note: MASTER CAUTION and OVHT/DET system annunciator lights do not illuminate.

Copyright © The Boeing Company. See title page for details.

3 WHEEL WELL Fire Warning Light

Illuminated (red) – indicates fire in main gear wheel well

Note: Master FIRE WARN lights illuminate and fire warning bell sounds.

4 Engine BOTTLE DISCHARGE Light

Illuminated (amber) – indicates related fire extinguisher bottle has discharged.

5 APU Detector Inoperative (DET INOP) Light

Illuminated (amber) – indicates APU detector loop has failed.

Note: MASTER CAUTION and OVHT/DET system annunciator lights illuminate.

6 APU BOTTLE DISCHARGE Light

Illuminated (amber) – indicates APU extinguisher bottle has discharged.

7 Extinguisher Test (EXT TEST) Lights

Illuminated (green) – EXT TEST switch is positioned to 1 or 2 and circuit continuity is normal.

Cargo Fire Panel

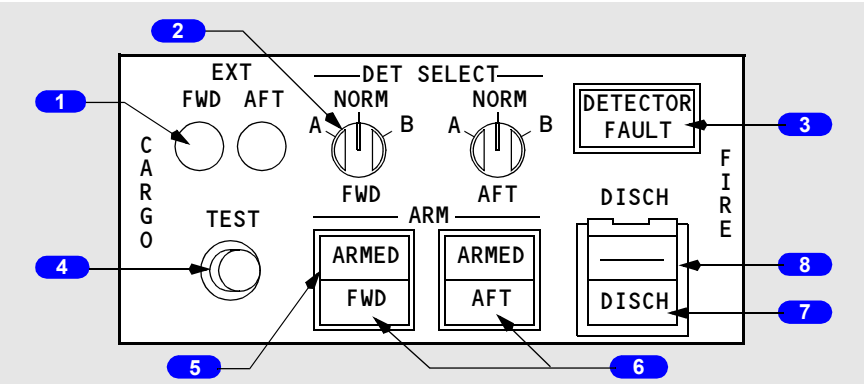

AFT ELECTRONIC PANEL

1 Extinguisher (EXT) Test Lights

Illuminated (green) - Cargo Fire TEST switch is pushed and fire bottle discharge squib circuit continuity is normal.

Copyright © The Boeing Company. See title page for details.

2 Detector Select (DET SELECT) Switches

NORM - detection loop A and B are active.

A - detection loop A is active.

B - detection loop B is active.

3 DETECTOR FAULT Light

Illuminated (amber) -

- Both loops in one or both cargo compartments have failed

4 Cargo Fire TEST Switch

PUSH - tests circuits for both forward and aft cargo fire detector loops and suppression system.

Note: See Cargo Fire System Tests in Section 20.

5 Cargo Fire ARM Switches
[Option - Single Cargo Fire Extinguisher bottle]

PUSH -

- FWD ARMED - extinguisher armed for the forward cargo compartment
- AFT ARMED - extinguisher armed for the aft cargo compartment.

6 Cargo Fire (FWD/AFT) Warning Lights

Illuminated (red) -

- at least one detector in each loop detects smoke
- with power failed in one loop, at least one detector on the remaining loop detects smoke.

Note: Master FIRE WARN lights illuminate and fire warning bell sounds.

7 Cargo Fire Bottle Discharge (DISCH) Light

Illuminated (amber) - indicates the extinguisher bottle has discharged

8 Cargo Fire Discharge (DISCH) Switch

PUSH - if system is armed, discharges the extinguisher bottle.

Copyright © The Boeing Company. See title page for details.

Master Fire Warning Light

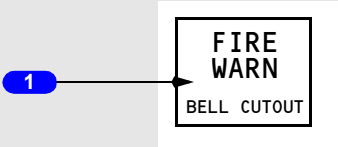

GLARESHIELD

1 Master Fire Warning (FIRE WARN) Lights

Illuminated (red) – indicates a fire warning (or system test) in engine, APU, main gear wheel well or cargo compartment

- fire warning bell sounds
- if on ground, remote APU fire warning horn sounds.

Push –

- extinguishes both master FIRE WARN lights
- silences fire warning bell
- silences remote APU fire warning horn
- resets system for additional warnings.

Note: Pushing fire warning bell cutout switch on overheat/fire protection panel results in same actions.

Copyright © The Boeing Company. See title page for details.

APU Ground Control Panel

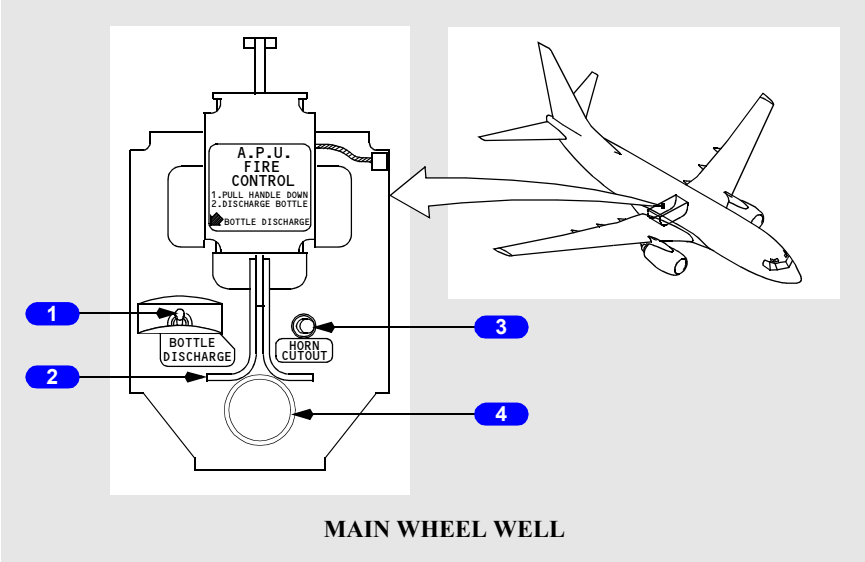

1 APU BOTTLE DISCHARGE Switch

(spring–loaded to the right and saftied.)

Left – discharges APU extinguisher.

Note: Armed only if APU fire control handle is pulled at this panel.

2 APU Fire Control Handle

Up – normal position.

Down –

- arms APU BOTTLE DISCHARGE switch (on this panel only)
- closes APU fuel shutoff, bleed air valve and APU inlet door
- trips generator control relay and breaker.

3 APU Fire Warning HORN CUTOUT Switch

Push –

- silences fire alarm bell
- silences APU fire warning horn
- causes APU fire warning light to stop flashing but remain illuminated.

Copyright © The Boeing Company. See title page for details.

4 APU Fire Warning Light

Illuminated (red flashing) – indicates fire in APU.

Note: Also, flight deck fire warning bell sounds and APU fire warning horn in main wheel well sounds.

Illuminated (red steady) – indicates APU fire warning HORN CUTOUT switch has been pushed following an APU fire indication.

Lavatory Fire

Lavatory Smoke Detection

[Option - Lavatory Smoke Light]

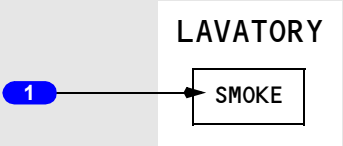

FORWARD OVERHEAD PANEL

1 LAVATORY SMOKE Light

Illuminated (amber) –

- smoke has been detected in a lavatory
- a test is being conducted.

Note: MASTER CAUTION and OVERHEAD system annunciator lights illuminate.

Copyright © The Boeing Company. See title page for details.

Lavatory Fire Extinguisher

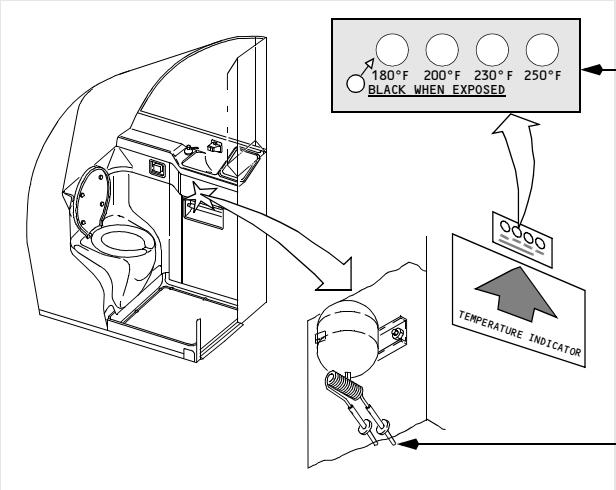

BELOW LAVATORY SINK

1 TEMPERATURE INDICATOR Placard

White – normal condition.

Black – exposed to high temperatures.

2 Heat Activated Nozzles

Flat black – normal condition.

Aluminum – indicates extinguisher has discharged.

Copyright © The Boeing Company. See title page for details.

Intentionally
Blank

Copyright © The Boeing Company. See title page for details.

Introduction

There are fire detection and extinguishing systems for:

- engines
- APU
- lavatories
- cargo compartments.

The engines also have overheat detection systems.

The main gear wheel well has a fire detection system, but no fire extinguishing system.

Engine Fire Protection

Engine fire protection consists of these systems:

- engine overheat and fire detection powered by the battery bus
- engine fire extinguishing powered by the hot battery bus.

Engine Overheat and Fire Detection

Each engine contains two overheat/fire detector loops. Each loop provides both fire and overheat detection. As the temperature of a detector increases to a predetermined limit, the detector senses an overheat condition. At higher temperatures, the detector senses a fire condition. Normally, both detector loops must sense a fire or overheat condition to cause an engine overheat or fire alert. The ENG OVERHEAT light or engine fire warning switch remains illuminated until the temperature drops below the onset temperature.

An OVHT DET switch for each engine, labeled A, B, and NORMAL, permits selection of either loop A or B, or both A and B, as the active detecting loops.

The system contains a fault monitoring circuit. If one loop fails with the OVHT DET switch in NORMAL, that loop is automatically deselected and the remaining loop functions as a single loop detector. There is no flight deck indication of single loop failure. If both loops fail on an engine, the FAULT light illuminates and the system is inoperative.

If the OVHT DET switch is positioned to A or B, the system operates as a single loop system. The non–selected loop is not monitored. If the selected loop fails, the FAULT light illuminates and the system is inoperative.

The indications of an engine overheat are:

- both MASTER CAUTION lights illuminate
- the OVHT/DET system annunciator light illuminates
- the related ENG OVERHEAT light illuminates.

Copyright © The Boeing Company. See title page for details.

The indications of an engine fire are:

- the fire warning bell sounds
- both master FIRE WARN lights illuminate
- the related engine fire warning switch illuminates
- all related engine overheat alert indications illuminate.

Engine Fire Extinguishing

The engine fire extinguisher system consists of two engine fire extinguisher bottles, two engine fire warning switches, two BOTTLE DISCHARGE lights, and an EXT TEST switch. Either or both bottles can be discharged into either engine.

The engine fire warning switches are normally locked down to prevent inadvertent shutdown of an engine. Illumination of an engine fire warning switch or ENG OVERHEAT light unlocks the engine fire warning switch. The switches may also be unlocked manually.

Pulling the engine fire warning switch up:

- closes both the engine fuel shutoff valve and the spar fuel shutoff valve
- closes the engine bleed air valve resulting in loss of wing anti–ice to the affected wing and closure of bleed air operated pack valve
- trips the generator control relay and breaker
- closes the hydraulic fluid shutoff valve. The engine driven hydraulic pump LOW PRESSURE light is deactivated
- disables thrust reverser for the related engine.
- allows the engine fire warning switch to be rotated for discharge
- arms one discharge squib on each engine fire extinguisher bottle.

Rotating the engine fire warning switch electrically “fires” a squib, discharging the extinguishing agent into the related engine. Rotating the switch the other way discharges the remaining bottle.

The L or R BOTTLE DISCHARGE light illuminates a few seconds after the engine fire warning switch is rotated, indicating the bottle has discharged.

Copyright © The Boeing Company. See title page for details.

Engine Fire Extinguisher Schematic

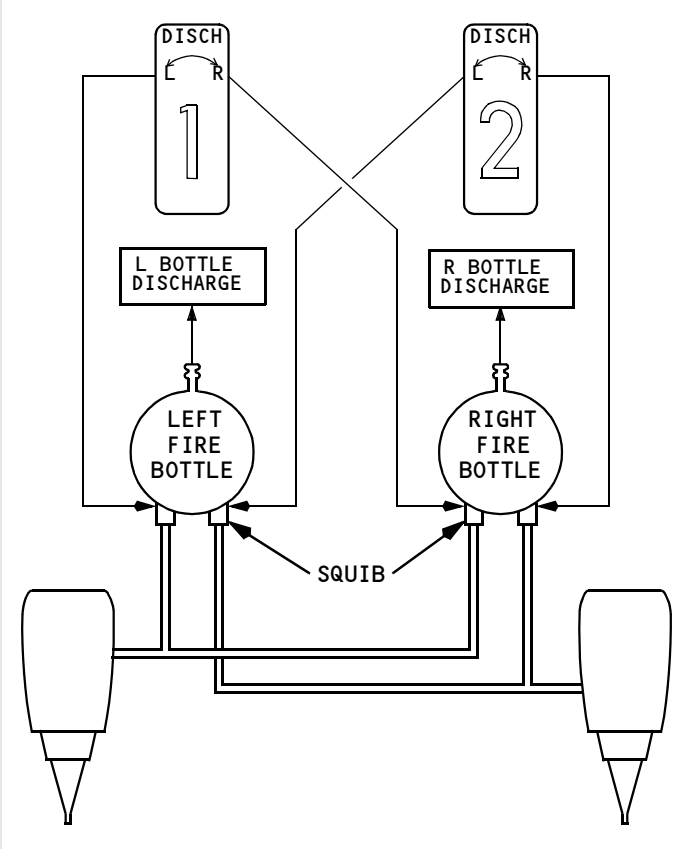

Copyright © The Boeing Company. See title page for details.

DO NOT USE FOR FLIGHT

APU Fire Protection

APU fire protection consists of these systems:

- APU fire detection powered by the battery bus.
- APU fire extinguishing powered by the hot battery bus.

APU Fire Detection

A single fire detection loop is installed on the APU. As the temperature of the detector increases to a predetermined limit, the detector senses a fire condition. The APU fire warning switch remains illuminated until the temperature of the detector has decreased below the onset temperature.

The system contains a fault monitoring circuit. If the loop fails, the APU DET INOP light illuminates indicating the APU fire detection system is inoperative.

The indications of an APU fire are:

- the fire warning bell sounds
- both master FIRE WARN lights illuminate
- the APU fire warning switch illuminates
- the APU automatically shuts down
- the wheel well APU fire warning horn sounds, (on the ground only), and the wheel well APU fire warning light flashes.

APU Fire Extinguishing

The APU fire extinguisher system consists of one APU fire extinguisher bottle, an APU fire warning switch, an APU BOTTLE DISCHARGE light, and an EXT TEST switch. The APU ground control panel located in the right main wheel well also contains an APU fire warning light, an APU BOTTLE DISCHARGE switch, an APU fire control handle and APU HORN CUTOUT switch.

The APU fire warning switch is normally locked down to prevent inadvertent shutdown of the APU. Illumination of the APU fire warning switch unlocks the switch. The switch may also be unlocked manually.

Pulling the APU Fire Warning switch up:

- provides backup for the automatic shutdown feature
- deactivates the fuel solenoid and closes the APU fuel shutoff valve
- closes the APU bleed air valve
- closes the APU air inlet door
- trips the APU generator control relay and breaker
- allows the APU fire warning switch to be rotated for discharge
- arms the APU fire extinguisher bottle squib.

Copyright © The Boeing Company. See title page for details.

Rotating the APU fire warning switch in either direction electrically “fires” the squib discharging the extinguishing agent into the APU. The APU BOTTLE DISCHARGE light illuminates after a few seconds, indicating the bottle has discharged.

Main Wheel Well Fire Protection

Main wheel well fire protection consists of fire detection powered by the No. 1 AC transfer bus.

Note: The main wheel well has no fire extinguishing system. The nose wheel well does not have a fire detection system.

Main Wheel Well Fire Detection

A single fire detector loop is installed in the main wheel well. As the temperature of the detector increases to a predetermined limit, the detector senses a fire condition. The WHEEL WELL fire warning light remains illuminated until the temperature of the detector has decreased below the onset temperature.

The indications for a main wheel well fire are:

- the fire warning bell sounds
- both master FIRE WARN lights illuminate
- the WHEEL WELL fire warning light illuminates.

Cargo Compartment Fire Protection

Cargo fire protection consists of these systems:

- cargo compartment smoke detection powered by DC bus 1 and DC bus 2
- cargo compartment fire extinguishing powered by the hot battery bus.

Cargo Compartment Smoke Detection

The forward and aft cargo compartments each have smoke detectors in a dual loop configuration. Normally, both detection loops must sense smoke to cause an alert. These loops function in the same manner as the engine overheat/fire detection loops.

Cargo Compartment Fire Warning

The indications of a cargo compartment fire are:

- the fire warning bell sounds
- both master FIRE WARN lights illuminate
- the FWD/AFT cargo fire warning light(s) illuminates.

Copyright © The Boeing Company. See title page for details.

Cargo Compartment Fire Extinguishing

[Option - Single cargo fire extinguisher bottle]
A single fire extinguisher bottle is installed in the air conditioning mix bay on the forward wing spar. Detection of a fire in either the forward or aft compartment will cause the FWD or AFT cargo fire warning light to illuminate. The extinguisher is armed by pushing the appropriate cargo fire ARMED switch. Once armed, the system is discharged by pushing the cargo fire DISCH switch. This results in the total discharge of the bottle contents into the selected compartment. The cargo fire DISCH light illuminates once the bottle is discharged. It may take up to 30 seconds for the light to illuminate.

Cargo Fire Extinguisher Schematic

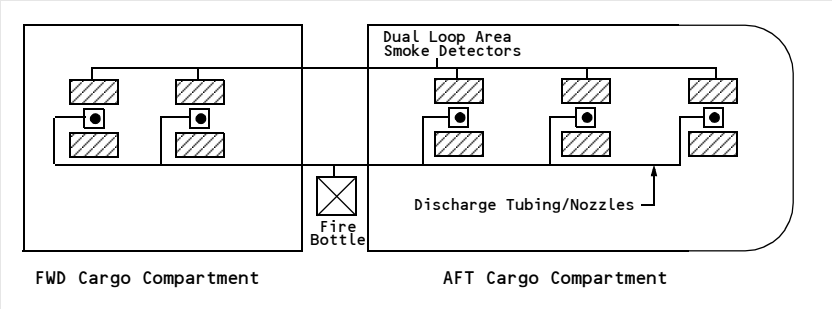

Lavatory Fire Protection

Lavatory fire protection consists of these systems:

- lavatory smoke detection
- lavatory fire extinguishing (heat activated).

Lavatory Smoke Detection

The lavatory smoke detection system monitors for the presence of smoke. When smoke is detected:

- an aural warning sounds
- the red alarm indicator light on the lavatory smoke detector panel illuminates and the appropriate amber lavatory call light will flash
- the amber lavatory SMOKE light on the forward overhead panel illuminates.

Copyright © The Boeing Company. See title page for details.

Lavatory Fire Extinguisher System

A fire extinguisher system is located beneath the sink area in each lavatory. When a fire is detected:

- fire extinguisher operation is automatic
- flight deck has no indication of extinguisher discharge.

Fire and Overheat System Tests

The fire and overheat detection systems can be tested by pushing and holding the FAULT/INOP and OVHT/FIRE TEST switch. Extinguisher continuity can be tested by pushing and holding the EXT TEST switch. All test indications clear when switches are released.

FAULT/INOP Test Detection

The fault detection circuits for both the engines and the APU are tested by pushing and holding the FAULT/INOP and OVHT/FIRE TEST switch in the FAULT/INOP position.

The indications for the FAULT/INOP test are:

- both MASTER CAUTION lights illuminate
- the OVHT/DET system annunciator light illuminates
- the FAULT light illuminates
- the APU DET INOP light illuminates.

OVERHEAT/FIRE Test Detection

The overheat and fire detection loops on both engines, the APU, and the fire detector in the wheel well are tested by pushing and holding the FAULT/INOP and OVHT/FIRE TEST switch in the OVHT/FIRE position.

The indications for the OVHT/FIRE test are:

- the fire warning bell sounds
- both master FIRE WARN lights illuminate
- both MASTER CAUTION lights illuminate
- the OVHT/DET system annunciator light illuminates
- both engine fire warning switches illuminate
- the APU fire warning switch illuminates
- both ENG OVERHEAT lights illuminate
- the WHEEL WELL fire warning light illuminates if AC power is available
- on the ground, the wheel well APU fire warning horn sounds and the wheel well APU fire warning light flashes.

Copyright © The Boeing Company. See title page for details.

Extinguisher Test

When the EXT TEST switch is positioned to 1 or 2, the green EXT TEST lights illuminate, verifying circuit continuity from the squib to the engine fire warning switch.

Cargo Fire System Tests

The cargo fire detection and suppression system can be tested by pushing and holding the cargo fire TEST switch. This sends a test signal to the forward and aft cargo fire detector loops and verifies continuity of the extinguisher bottle squib circuits. All test indications clear when the TEST switch is released

Cargo Fire TEST

The indications for the Cargo Fire test are:

- the fire warning bell sounds
- both master FIRE WARN lights illuminate
- the extinguisher test lights illuminate
- the FWD and AFT cargo fire warning lights illuminate when all detectors in selected loops (s) respond to the fire test
- the cargo fire bottle DISCH light illuminates

Note: The fire warning BELL CUTOUT switch on the Overheat/Fire Protection panel can silence the fire warning bell and extinguish the master FIRE WARN lights

Note: During a Cargo Fire Test, the DETECTOR Fault light will illuminate if one or more detectors in the loop(s) has failed.

Note: Individual detector faults can only be detected by a manually initiated test. The MASTER CAUTION light does not illuminate.

Note: At the end of cargo fire testing, up to a four second delay may occur to allow all applicable indications to extinguish at the same time.

Cargo Fire Extinguisher Test

When the Cargo Fire TEST button is pushed, the green EXT lights illuminate, verifying the fire bottle discharge squib circuit continuity is normal.

Copyright © The Boeing Company. See title page for details.

DO NOT USE FOR FLIGHT

Controls and Indicators 9.10.1

Flight Control Panel 9.10.1
Stabilizer 9.10.5
Rudder 9.10.7
Aileron / Elevator / Flight Spoilers 9.10.8
Speed Brakes 9.10.9
Trailing Edge Flaps 9.10.11
Leading Edge Devices 9.10.13
Flight Control Surface Position Indicator 9.10.14

System Description 9.20.1

Introduction 9.20.1
Pilot Controls 9.20.1
Flight Control Surfaces 9.20.2
Flight Control Surfaces Location 9.20.2
Roll Control 9.20.4
Ailerons 9.20.4
Flight Spoilers 9.20.5
Roll Control Schematic 9.20.6
Pitch Control 9.20.7
Elevators 9.20.7
Stabilizer 9.20.8
Pitch Control Schematic 9.20.10
Stall Identification 9.20.11
Yaw Control 9.20.12
Rudder 9.20.12
Yaw Damper 9.20.13
Yaw Control Schematic 9.20.14
Speed Brakes 9.20.16

Copyright © The Boeing Company. See title page for details.

In-Flight Operation. 9.20.16
Ground Operation. 9.20.16
Speed Brakes Schematic 9.20.18
Flaps and Slats. 9.20.19
Flap and Slat Sequencing 9.20.19
Flap Load Relief. 9.20.19
Autoslats. 9.20.20
Alternate Extension 9.20.20
Asymmetry and Skew Detection, Protection and Indication. 9.20.23
Uncommanded Motion Detection, Protection and Indication. 9.20.23

Copyright © The Boeing Company. See title page for details.

DO NOT USE FOR FLIGHT

Flight Control Panel

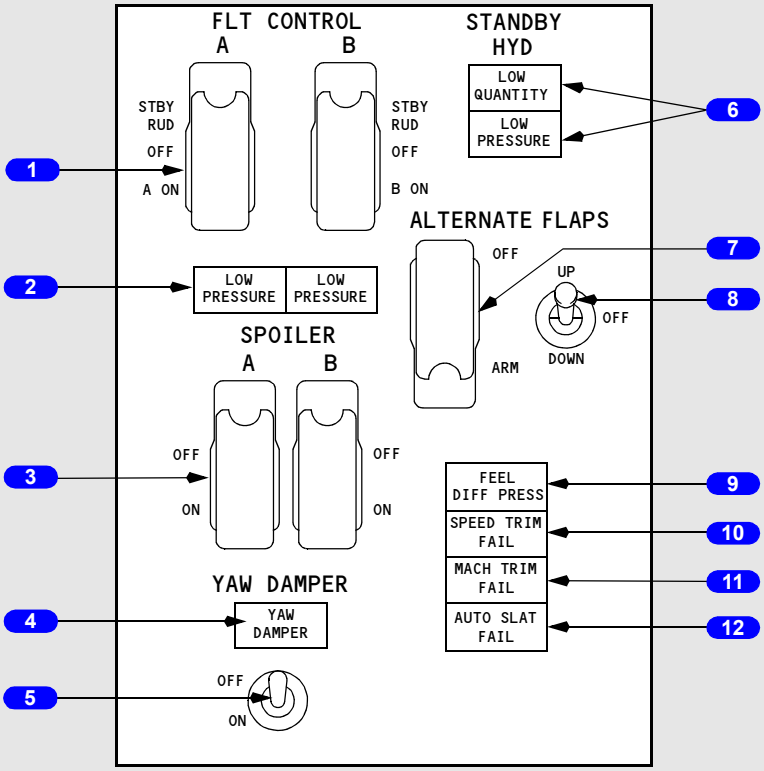

FORWARD OVERHEAD PANEL

Copyright © The Boeing Company. See title page for details.

DO NOT USE FOR FLIGHT

[Flight Control Panel for 737 modified rudder system.]

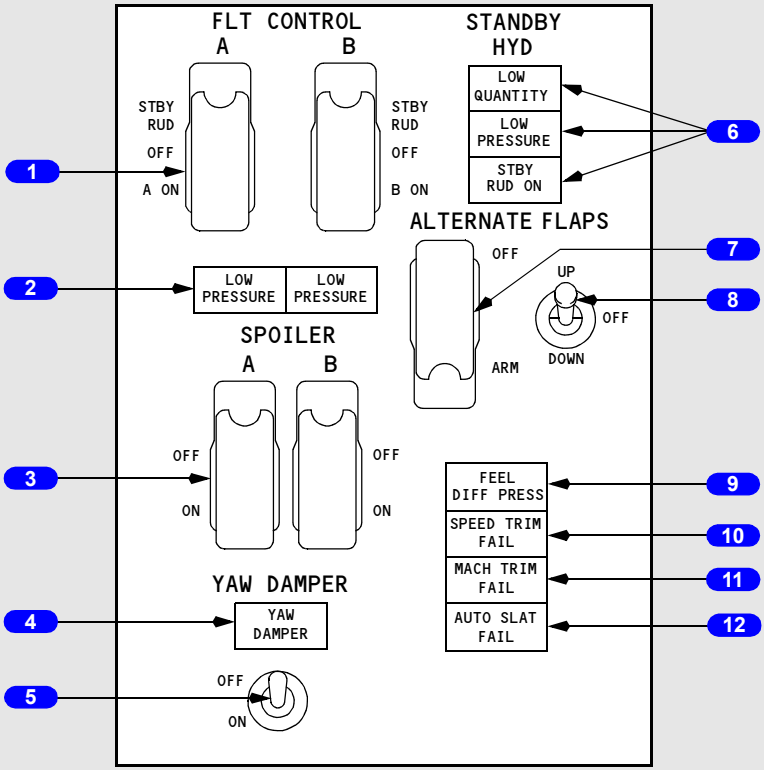

FORWARD OVERHEAD PANEL

1 FLIGHT CONTROL Switches

STBY RUD - activates standby hydraulic system pump and opens standby rudder shutoff valve to pressurize standby rudder power control unit.

OFF - closes flight control shutoff valve isolating ailerons, elevators and rudder from associated hydraulic system pressure.

ON (guarded position) - normal operating position.

2 Flight Control LOW PRESSURE Lights

Illuminated (amber) -

- indicates low hydraulic system (A or B) pressure to ailerons, elevator and rudder
- deactivated when associated FLIGHT CONTROL switch is positioned to STBY RUD and standby rudder shutoff valve opens.

Copyright © The Boeing Company. See title page for details.

3 Flight SPOILER Switches

ON (guarded position) – normal operating position.

OFF – closes the respective flight spoiler shutoff valve.

Note: Used for maintenance purposes only.

4 YAW DAMPER Light

Illuminated (amber) – yaw damper is not engaged.

5 YAW DAMPER Switch

OFF – disengages yaw damper.

ON –

- engages main yaw damper to main rudder power control unit if the B FLT CONTROL switch is in the ON position
- engages standby yaw damper to standby rudder power control unit if both the A and B FLT CONTROL switches are in the STBY RUD position.

6 STANDBY HYD Lights

STANDBY HYDRAULIC LOW QUANTITY Light

Illuminated (amber) -

- indicates low quantity in standby hydraulic reservoir
- always armed.

STANDBY HYDRAULIC LOW PRESSURE Light

Illuminated (amber) -

- indicates output pressure of standby pump is low
- armed only when standby pump operation has been selected or automatic standby function is activated.

STBY RUD ON Light

- Illuminated (amber) - indicates the standby rudder PCU is pressurized.

7 ALTERNATE FLAPS Master Switch

OFF (guarded position) – normal operating position.

ARM – closes TE flap bypass valve, activates standby pump, and arms the ALTERNATE FLAPS position switch.

8 ALTERNATE FLAPS Position Switch

Functions only when the ALTERNATE FLAPS master switch is in ARM.

Copyright © The Boeing Company. See title page for details.

UP –

- electrically retracts TE flaps
- LE devices remain extended and cannot be retracted by the alternate flaps system.

OFF – normal operating position.

DOWN (spring loaded to OFF) –

- (momentary) fully extends LE devices using standby hydraulic pressure
- (hold) electrically extends TE flaps until released.

9 Feel Differential Pressure (FEEL DIFF PRESS) Light

Armed when the TE flaps are up or down.

Illuminated (amber) -

- indicates excessive differential pressure in the elevator feel computer.

Note: Excessive differential pressure can be caused by erroneous activation of the Elevator Feel Shift module.

10 Speed Trim Failure (SPEED TRIM FAIL) Light

Illuminated (amber) –

- indicates failure of the speed trim system
- indicates failure of a single FCC channel when MASTER CAUTION light recall is activated and light extinguishes when Master Caution System is reset.

11 Mach Trim Failure (MACH TRIM FAIL) Light

Illuminated (amber) –

- indicates failure of the mach trim system
- indicates failure of a single FCC channel when MASTER CAUTION light recall is activated and light extinguishes when master caution system is reset.

12 Automatic Slat Failure (AUTO SLAT FAIL) Light

Illuminated (amber) –

- indicates failure of the auto slat system
- indicates failure of a single Stall Management/Yaw Damper (SMYD) computer when illuminated during MASTER CAUTION recall and extinguishes when master caution system is reset.

Copyright © The Boeing Company. See title page for details.

Stabilizer

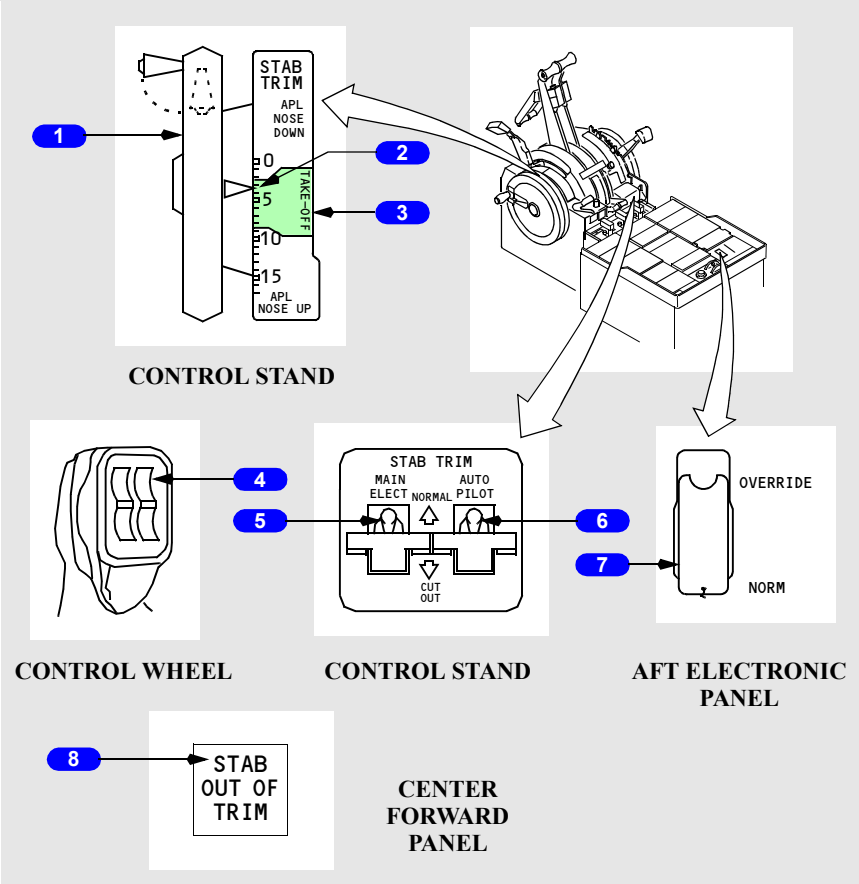

1 Stabilizer Trim Wheel

- provides for manual operation of stabilizer
- overrides any other stabilizer trim inputs
- rotates when stabilizer is in motion.

Note: Handle should be folded inside stabilizer trim wheel for normal operation

2 Stabilizer Trim Indicator

Indicates units of airplane trim on the adjacent scale.

3 Stabilizer Trim Green Band Range

Corresponds to allowable range of trim settings for takeoff.

Copyright © The Boeing Company. See title page for details.

4 Stabilizer Trim Switches (spring-loaded to neutral)

Push (both) –

- electrically commands stabilizer trim in desired direction
- autopilot disengages if engaged.

5 Stabilizer Trim Main Electric (MAIN ELECT) Cutout Switch

NORMAL – normal operating position.

CUTOUT – deactivates stabilizer trim switch operation.

6 Stabilizer Trim AUTOPILOT Cutout Switch

NORMAL – normal operating position.

CUTOUT –

- deactivates autopilot stabilizer trim operation
- autopilot disengages if engaged.

7 Stabilizer Trim Override Switch

OVERRIDE – bypasses the control column actuated stabilizer trim cutout switches to restore power to the Stabilizer Trim Switches

NORM (guarded position) – normal operating position.

8 Stabilizer Out of Trim (STAB OUT OF TRIM) Light

Refer to Chapter 4 – Automatic Flight

Copyright © The Boeing Company. See title page for details.

Rudder

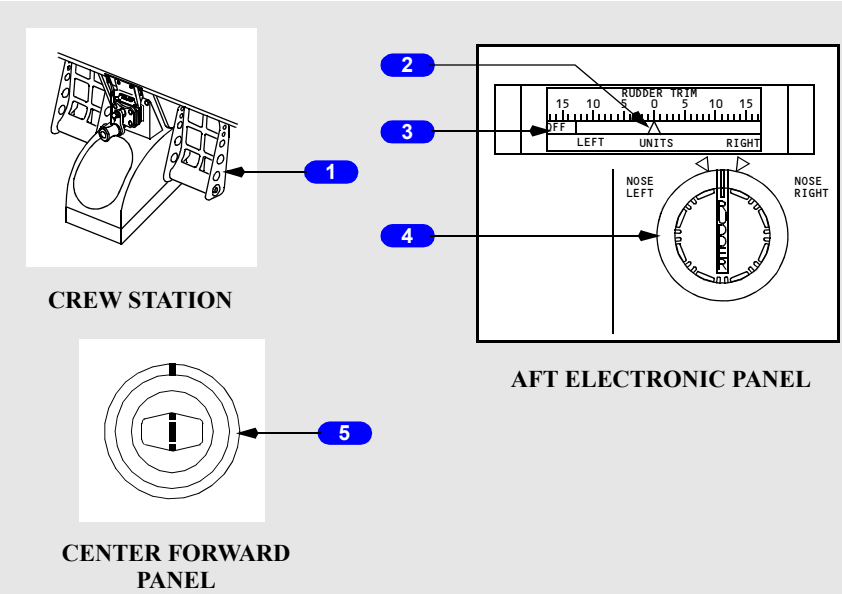

1 Rudder Pedals

Push –

- controls rudder position
- permits limited nose gear steering up to 7 degrees each side of center.

2 Rudder Trim Indicator

Indicates units of rudder trim.

3 Rudder Trim OFF Flag

Illuminated (amber) (in view) – rudder trim indicator is inoperative.

4 Rudder Trim Control (spring-loaded to neutral)

Rotate – electrically trims the rudder in the desired direction.

5 YAW DAMPER Indicator

- Indicates main yaw damper movement of rudder
- pilot rudder pedal inputs are not indicated.

Copyright © The Boeing Company. See title page for details.

Aileron / Elevator / Flight Spoilers

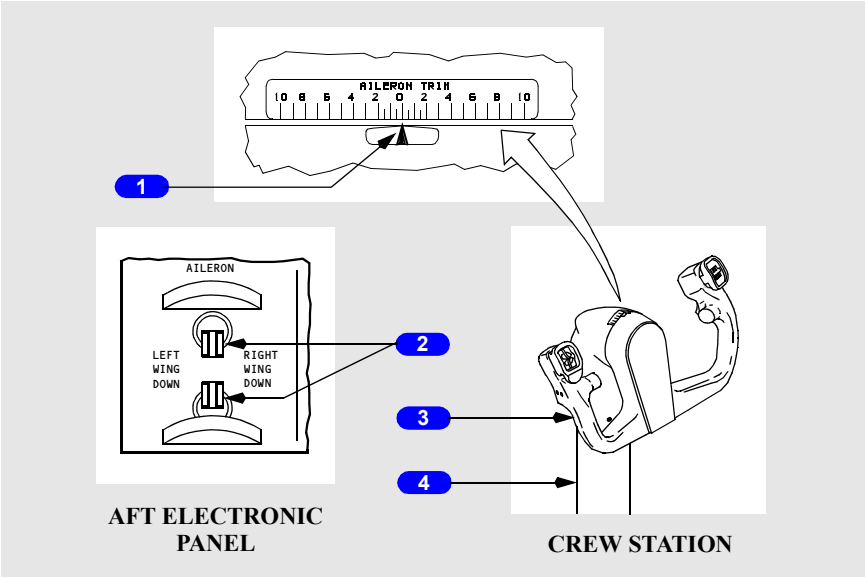

1 AILERON TRIM Indicator

Indicates units of aileron trim.

2 AILERON Trim Switches (spring-loaded to the neutral position)

Movement of both switches repositions the aileron neutral control position.

3 Control Wheel

Rotate – operates ailerons and flight spoilers in desired direction.

4 Control Column

Push/Pull –

- operates elevators in the desired direction
- movement opposing stabilizer trim stops electric trimming.

Copyright © The Boeing Company. See title page for details.

Speed Brakes

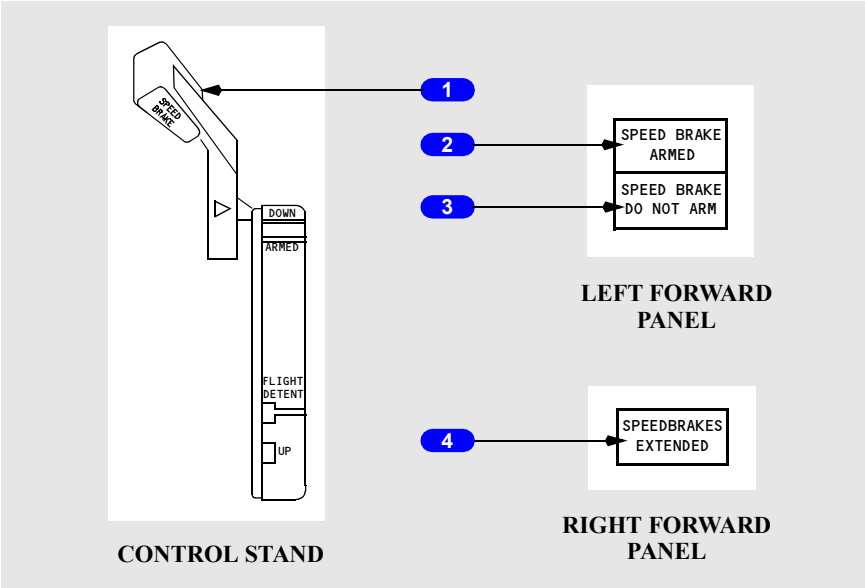

1 SPEED BRAKE Lever

DOWN (detent) – all flight and ground spoiler panels in faired position.

ARMED –

- automatic speed brake system armed
- upon touchdown, the SPEED BRAKE lever moves to the UP position, and all flight and ground spoilers extend.

FLIGHT DETENT – all flight spoilers are extended to their maximum position for inflight use.

UP – all flight and ground spoilers are extended to their maximum position for ground use.

2 SPEED BRAKE ARMED Light

Light deactivated when SPEED BRAKE lever is in the DOWN position.

Illuminated (green) – indicates valid automatic speed brake system inputs.

3 SPEED BRAKE DO NOT ARM Light

Light deactivated when SPEED BRAKE lever is in the DOWN position.

Copyright © The Boeing Company. See title page for details.

Illuminated (amber) –

- indicates abnormal condition or test inputs to the automatic speed brake system

4 SPEEDBRAKES EXTENDED Light

Illuminated (amber) –

- in–flight -
  - SPEED BRAKE lever is beyond the ARMED position, and
  - TE flaps extended more than flaps 10, or
  - radio altitude less than 800 feet
- on the ground -
  - SPEED BRAKE lever is in the DOWN detent,
  - ground spoilers are not stowed.

Note: On the ground, the SPEEDBRAKES EXTENDED light does not illuminate when hydraulic system A pressure is less than 750 psi.

Copyright © The Boeing Company. See title page for details.

Trailing Edge Flaps

[Option - FLAP LOAD RELIEF light]

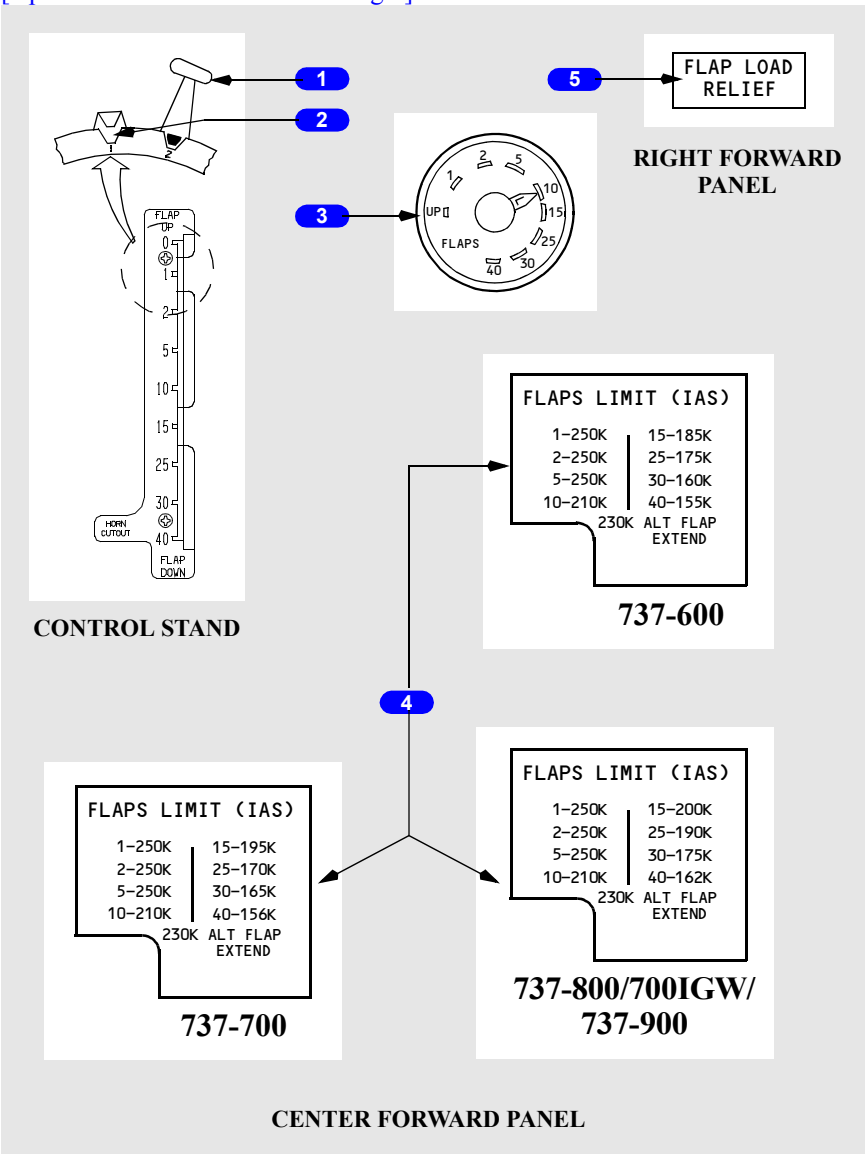

Copyright © The Boeing Company. See title page for details.

1 FLAP Lever

- selects position of flap control valve, directing hydraulic pressure for flap drive unit
- position of the LE devices is determined by selecting TE flap position
- flap positions 30 and 40 arm the flap load relief system.

2 Flap Gates

Prevents inadvertent flap lever movement beyond:

- position 1 - to check flap position for one engine inoperative go-around
- position 15 - to check flap position for normal go-around.

3 Flap Position Indicator

- indicates position of left and right TE flaps
- provides TE flaps asymmetry and skew indication.

4 FLAPS LIMIT Placard

Indicates maximum speed for each flap setting.

5 FLAP LOAD RELIEF Light
[Option]

Illuminated (amber) –

- if flaps are set at 40:
  - flaps retract to 30 due to excess airspeed or
- if flaps are set at 30:
  - flaps retract to 25 due to excess airspeed.

Copyright © The Boeing Company. See title page for details.

Leading Edge Devices

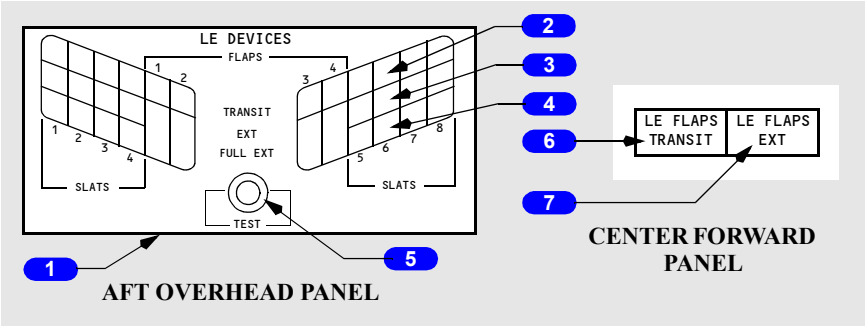

1 Leading Edge Devices (LE DEVICES) Annunciator Panel

Indicates position of individual LE flaps and slats.

Extinguished – related LE device retracted.

2 Leading Edge Devices TRANSIT Lights

Illuminated (amber) – related LE device in transit.

3 Leading Edge Devices Extended (EXT) Lights

Illuminated (green) – related LE slat in extended (intermediate) position.

4 Leading Edge Devices Full Extended (FULL EXT) Lights

Illuminated (green) – related LE device fully extended.

5 Leading Edge Annunciator Panel TEST Switch

Press – tests all annunciator panel lights.

6 Leading Edge Flaps Transit (LE FLAPS TRANSIT) Light

Illuminated (amber) –

- any LE device in transit
- any LE device not in programmed position with respect to TE flaps
- a LE slat skew condition exists (slats 2 through 7 only)
- during alternate flap extension until LE devices are fully extended and TE flaps reach approximately flaps 15.

Note: Light is inhibited during autoslat operation in flight.

Copyright © The Boeing Company. See title page for details.

7 Leading Edge Flaps Extended (LE FLAPS EXT) Light

Illuminated (green) –

- all LE flaps extended and all LE slats in extended (intermediate) position (TE flap positions 1, 2 and 5)
- all LE devices fully extended (TE flap positions 10 through 40).

Flight Control Surface Position Indicator

[Option]

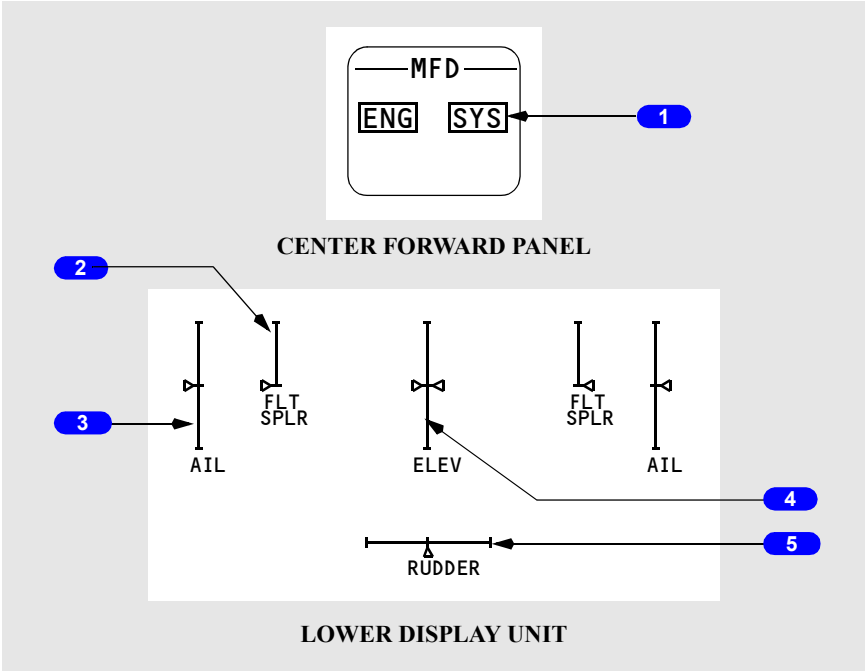

1 MFD System (SYS) Switch

Push – SYS

- displays flight control surface position indications on lower DU; or if the lower DU is unavailable, displays it on upper DU or inboard DU based on the position of the display select panel selector
- second push removes indications on the respective DU.

2 Flight Spoilers (FLT SPLR) (white)

Indicates related (left/right) flight spoilers position:

- top mark depicts flight spoilers fully deployed
- bottom mark depicts the spoilers down.

Copyright © The Boeing Company. See title page for details.

3 Aileron (AIL) (white)

Indicates related (left/right) aileron position:

- top mark depicts maximum up position
- center mark depicts neutral position
- bottom mark depicts maximum down position.

4 Elevator (ELEV) (white)

Indicates elevator position:

- top mark depicts maximum up position
- center mark depicts neutral position when on the ground and trimmed in the green band
- bottom mark depicts maximum down position.

Note: Elevator neutral position varies with stabilizer position, flap position and Mach. The center index mark is set for nominal takeoff conditions. With certain airplane nose up trim settings, the pointer will be somewhat displaced.

5 RUDDER (white)

Indicates rudder position:

- left mark depicts maximum left position
- center mark depicts neutral position
- right mark depicts maximum right position.

Copyright © The Boeing Company. See title page for details.

Intentionally
Blank

Copyright © The Boeing Company. See title page for details.

DO NOT USE FOR FLIGHT

Introduction

The primary flight control system uses conventional control wheel, column and pedals linked mechanically to hydraulic power control units which command the primary flight control surfaces; ailerons, elevators and rudder. The flight controls are powered by redundant hydraulic sources; system A and system B. Either hydraulic system can operate all primary flight controls. The ailerons and elevators may be operated manually if required. The rudder may be operated by the standby hydraulic system if system A and system B pressure is not available.

The secondary flight controls, high lift devices consisting of trailing edge (TE) flaps and leading edge (LE) flaps and slats (LE devices), are powered by hydraulic system B. In the event hydraulic system B fails, the TE flaps can be operated electrically. Under certain conditions the power transfer unit (PTU) automatically powers the LE devices. (Refer to Chapter 13, Hydraulics, Power Transfer Unit). They can also be extended using standby hydraulic pressure.

Pilot Controls

The pilot controls consist of:

- two control columns
- two control wheels
- two pairs of rudder pedals
- SPEED BRAKE lever
- FLAP lever
- STAB TRIM cutout switches
- STAB TRIM override switch
- stabilizer trim switches
- stabilizer trim wheel
- AILERON trim switches
- RUDDER trim control
- YAW DAMPER switch
- ALTERNATE FLAPS master switch
- alternate flaps position switch
- FLT CONTROL switches
- flight SPOILER switches

The columns and wheels are connected through transfer mechanisms which allow the pilots to bypass a jammed control or surface.

There is a rigid connection between both pairs of rudder pedals.

The SPEED BRAKE lever allows manual or automatic symmetric actuation of the spoilers.

Copyright © The Boeing Company. See title page for details.

Flight Control Surfaces

Pitch control is provided by:

- two elevators
- a movable horizontal stabilizer.

Roll control is provided by:

- two ailerons
- eight flight spoilers.

Yaw control is provided by a single rudder. During takeoff, the rudder becomes aerodynamically effective between 40 and 60 knots.

TE flaps and LE flaps and slats provide high lift for takeoff, approach and landing.

[Option: 737-800 with Blended Winglets]
Blended winglets provide enhanced performance, extended range and increased fuel efficiency.

In the air symmetric flight spoilers are used as speed brakes. On the ground symmetric flight and ground spoilers destroy lift and increase braking efficiency.

Flight Control Surfaces Location

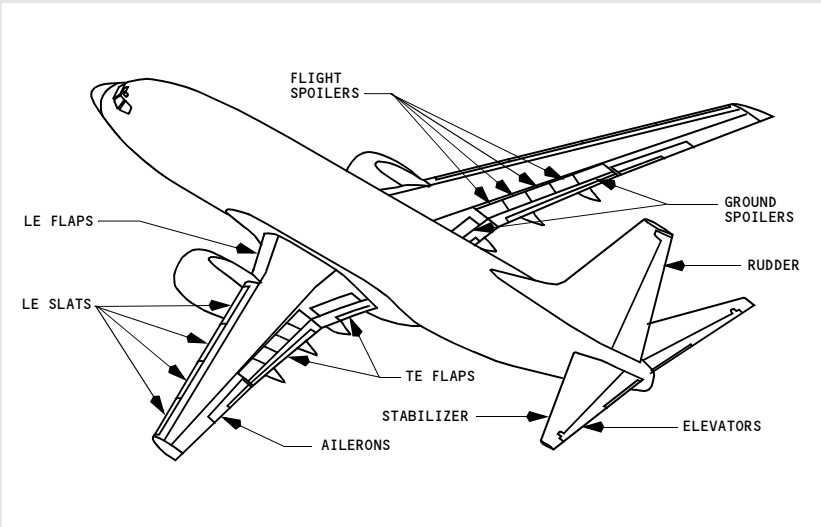

Copyright © The Boeing Company. See title page for details.

[Option: 737-800 with Blended Winglets]

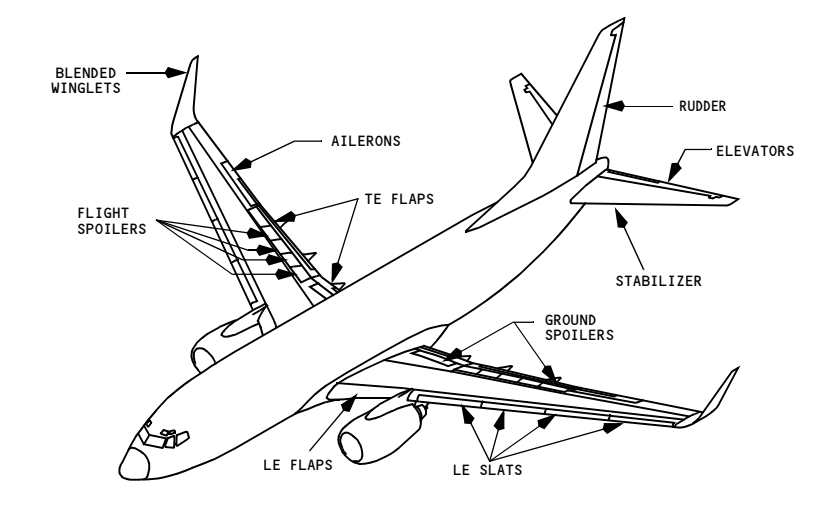

Copyright © The Boeing Company. See title page for details.

Roll Control

The roll control surfaces consist of hydraulically powered ailerons and flight spoilers, which are controlled by rotating either control wheel.

Ailerons

The ailerons provide roll control around the airplane's longitudinal axis. The ailerons are positioned by the pilots' control wheels. The A and B FLT CONTROL switches control hydraulic shutoff valves. These valves can be used to isolate each aileron, as well as the elevators and rudder, from related hydraulic system pressure.

The Captain's control wheel is connected by cables to the aileron power control units (PCUs) through the aileron feel and centering unit. The First Officer's control wheel is connected by cables to the spoiler PCUs through the spoiler mixer. The two control wheels are connected by a cable drive system which allows actuation of both ailerons and spoilers by either control wheel. With total hydraulic power failure the ailerons can be mechanically positioned by rotating the pilots' control wheels. Control forces are higher due to friction and aerodynamic loads.

Aileron Transfer Mechanism

If the ailerons or spoilers are jammed, force applied to the Captain's and the First Officer's control wheels will identify which system, ailerons or spoilers, is usable and which control wheel, Captain's or First Officer's, can provide roll control. If the aileron control system is jammed, force applied to the First Officer's control wheel provides roll control from the spoilers. The ailerons and the Captain's control wheel are inoperative. If the spoiler system is jammed, force applied to the Captain's control wheel provides roll control from the ailerons. The spoilers and the First Officer's control wheel are inoperative.

Aileron Trim

Dual AILERON trim switches, located on the aft electronic panel, must be pushed simultaneously to command trim changes. The trim electrically repositions the aileron feel and centering unit, which causes the control wheel to rotate and redefines the aileron neutral position. The amount of aileron trim is indicated on a scale on the top of each control column.

If aileron trim is used with the autopilot engaged, the trim is not reflected in the control wheel position. The autopilot overpowers the trim and holds the control wheel where it is required for heading/track control. Any aileron trim applied when the autopilot is engaged can result in an out of trim condition and an abrupt rolling movement when the autopilot is disconnected.

Copyright © The Boeing Company. See title page for details.

Flight Spoilers

Four flight spoilers are located on the upper surface of each wing. Each hydraulic system, A and B, is dedicated to a different set of spoiler pairs to provide isolation and maintain symmetric operation in the event of hydraulic system failure. Hydraulic pressure shutoff valves are controlled by the two flight SPOILER switches.

Flight spoiler panels are used as speed brakes to increase drag and reduce lift, both in flight and on the ground. The flight spoilers also supplement roll control in response to control wheel commands. A spoiler mixer, connected to the aileron cable-drive, controls the hydraulic power control units on each spoiler panel to provide spoiler movement proportional to aileron movement.

The flight spoilers rise on the wing with up aileron and remain faired on the wing with down aileron. When the control wheel is displaced more than approximately 10°, spoiler deflection is initiated.

Copyright © The Boeing Company. See title page for details.

DO NOT USE FOR FLIGHT

Roll Control Schematic

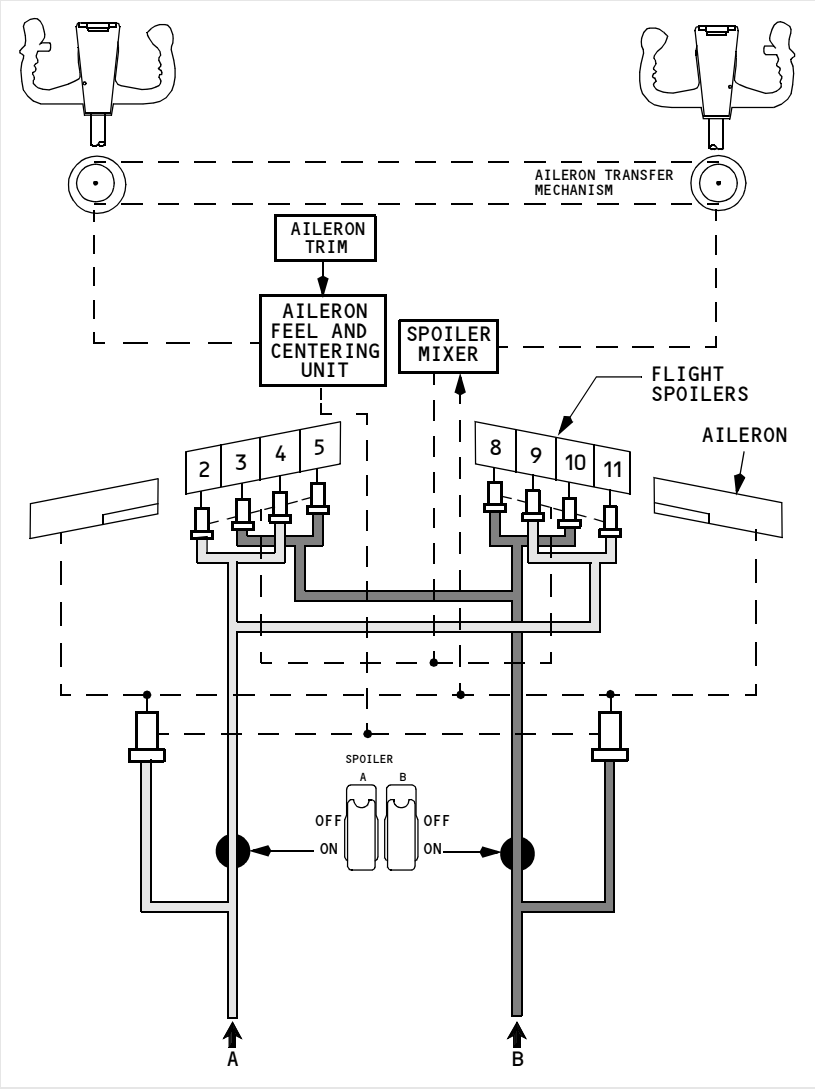

Copyright © The Boeing Company. See title page for details.

Pitch Control

The pitch control surfaces consist of hydraulically powered elevators and an electrically powered stabilizer. The elevators are controlled by forward or aft movement of the control column. The stabilizer is controlled by autopilot trim or manual trim.

Elevators

The elevators provide pitch control around the airplane's lateral axis. The elevators are positioned by the pilots' control columns. The A and B FLT CONTROL switches control hydraulic shutoff valves for the elevators.

Cables connect the pilots' control columns to elevator power control units (PCUs) which are powered by hydraulic system A and B. The elevators are interconnected by a torque tube. With loss of hydraulic system A and B the elevators can be mechanically positioned by forward or aft movement of the pilots' control columns. Control forces are higher due to friction and aerodynamic loads.

Elevator Control Column Override Mechanism

In the event of a control column jam, an override mechanism allows the control columns to be physically separated. Applying force against the jam will breakout either the Captain's or First Officer's control column. Whichever column moves freely after the breakout can provide adequate elevator control.

Although total available elevator travel is significantly reduced, there is sufficient elevator travel available for landing flare. Column forces are higher and exceed those experienced during manual reversion. If the jam exists during the landing phase, higher forces are required to generate sufficient elevator control to flare for landing. Stabilizer trim is available to counteract the sustained control column force.

Elevator Feel System

The elevator feel computer provides simulated aerodynamic forces using airspeed (from the elevator pitot system) and stabilizer position. Feel is transmitted to the control columns by the elevator feel and centering unit. To operate the feel system the elevator feel computer uses either hydraulic system A or B pressure, whichever is higher. When either hydraulic system or elevator feel pitot system fails, excessive differential hydraulic pressure is sensed in the elevator feel computer and the FEEL DIFF PRESS light illuminates.

Copyright © The Boeing Company. See title page for details.

Mach Trim System

A Mach trim system provides speed stability at the higher Mach numbers. Mach trim is automatically accomplished above Mach .615 by adjusting the elevators with respect to the stabilizer as speed increases. The flight control computers use Mach information from the ADIRU to compute a Mach trim actuator position. The Mach trim actuator repositions the elevator feel and centering unit which adjusts the control column neutral position.

Stabilizer

The horizontal stabilizer is positioned by a single electric trim motor controlled through either the stab trim switches on the control wheel or autopilot trim. The stabilizer may also be positioned by manually rotating the stabilizer trim wheel.

Stabilizer Trim

Stabilizer trim switches on each control wheel actuate the electric trim motor through the main electric stabilizer trim circuit when the airplane is flown manually. With the autopilot engaged, stabilizer trim is accomplished through the autopilot stabilizer trim circuit. The main electric and autopilot stabilizer trim have two speed modes: high speed with flaps extended and low speed with flaps retracted. If the autopilot is engaged, actuating either pair of stabilizer trim switches automatically disengages the autopilot. The stabilizer trim wheels rotate whenever electric stabilizer trim is actuated.

The STAB TRIM MAIN ELECT cutout switch and the STAB TRIM AUTOPILOT cutout switch, located on the control stand, are provided to allow the autopilot or main electric trim inputs to be disconnected from the stabilizer trim motor.

Control column actuated stabilizer trim cutout switches stop operation of the main electric and autopilot trim when the control column movement opposes trim direction. When the STAB TRIM override switch is positioned to OVERRIDE, electric trim can be used regardless of control column position.

Manual stabilizer control is accomplished through cables which allow the pilot to position the stabilizer by rotating the stabilizer trim wheels. The stabilizer is held in position by two independent brake systems. Manual rotation of the trim wheels can be used to override autopilot or main electric trim. The effort required to manually rotate the stabilizer trim wheels may be higher under certain flight conditions. Grasping the stabilizer trim wheel will stop stabilizer motion.

Stabilizer Trim Operation with Forward or Aft CG

In the event the stabilizer is trimmed to the end of the electrical trim limits, additional trim is available through the use of the manual trim wheels. If manual trim is used to position the stabilizer beyond the electrical trim limits, the stabilizer trim switches may be used to return the stabilizer to electrical trim limits.

Copyright © The Boeing Company. See title page for details.

Stabilizer Position Indication and Green Band

Stabilizer position is displayed in units on two STAB TRIM indicators located inboard of each stabilizer trim wheel. The STAB TRIM indicators also display the TAKEOFF green band indication.

The trim authority for each mode of trim is limited to:

- Main Electric Trim

[737-600]
  - flaps retracted 4.10 to 14.5 units

[737-700]
  - flaps retracted 4.30 to 14.5 units

[737-800]
  - flaps retracted 3.95 to 14.5 units

[737-900]
  - flaps retracted 3.90 to 14.5 units
  - flaps extended 0.05 to 14.5 units
- Autopilot Trim 0.05 to 14.5 units
- Manual Trim -0.20 to 16.9 units.

The green band range of the STAB TRIM indicator shows the takeoff trim range. An intermittent horn sounds if takeoff is attempted with the stabilizer trim outside the takeoff trim range.

Speed Trim System

The speed trim system (STS) is a speed stability augmentation system designed to improve flight characteristics during operations with a low gross weight, aft center of gravity and high thrust when the autopilot is not engaged. The purpose of the STS is to return the airplane to a trimmed speed by commanding the stabilizer in a direction opposite the speed change. The STS monitors inputs of stabilizer position, thrust lever position, airspeed and vertical speed and then trims the stabilizer using the autopilot stabilizer trim. As the airplane speed increases or decreases from the trimmed speed, the stabilizer is commanded in the direction to return the airplane to the trimmed speed. This increases control column forces to force the airplane to return to the trimmed speed. As the airplane returns to the trimmed speed, the STS commanded stabilizer movement is removed.

STS operates most frequently during takeoffs, climb and go-arounds. Conditions for speed trim operation are listed below:

- Airspeed between 100 KIAS and Mach 0.68
- 10 seconds after takeoff
- 5 seconds following release of trim switches
- N1 above 60%
- Autopilot not engaged
- Sensing of trim requirement

Copyright © The Boeing Company. See title page for details.

DO NOT USE FOR FLIGHT

Pitch Control Schematic

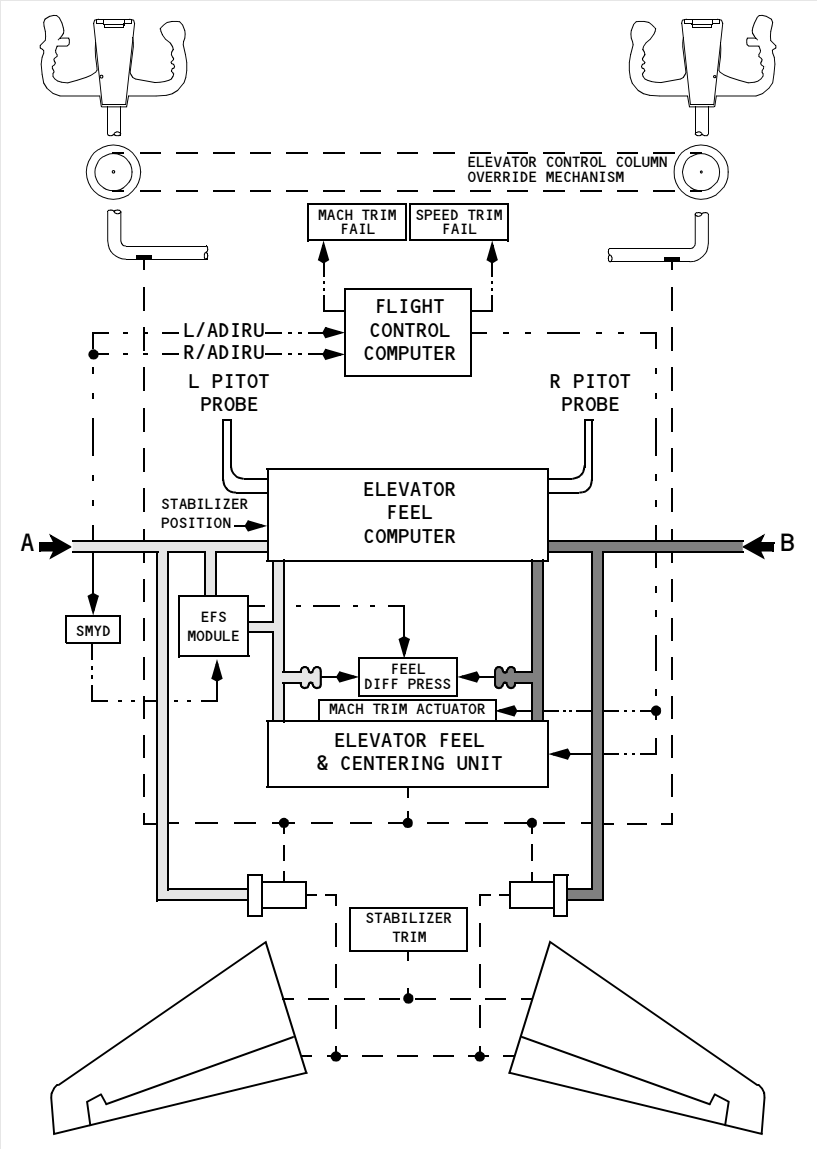

Copyright © The Boeing Company. See title page for details.

Stall Identification

Stall identification and control is enhanced by the yaw damper, the Elevator Feel Shift (EFS) module and the speed trim system. These three systems work together to help the pilot identify and prevent further movement into a stall condition.

During high AOA operations, the SMYD reduces yaw damper commanded rudder movement.

The EFS module increases hydraulic system A pressure to the elevator feel and centering unit during a stall. This increases forward control column force to approximately two times normal feel pressure. The EFS module is armed whenever an inhibit condition is not present. Inhibit conditions are: on the ground, radio altitude less than 100 feet and autopilot engaged. However, if EFS is active when descending through 100 feet RA, it remains active until AOA is reduced below approximately stickshaker threshold. There are no flight deck indications that the system is properly armed or activated.

As airspeed decreases towards stall speed, the speed trim system trims the stabilizer nose down and enables trim above stickshaker AOA. With this trim schedule the pilot must pull more aft column to stall the airplane. With the column aft, the amount of column force increase with the onset of EFS module is more pronounced.

Copyright © The Boeing Company. See title page for details.

Yaw Control

Yaw control is accomplished by a hydraulically powered rudder and a digital yaw damper system. The rudder is controlled by displacing the rudder pedals. The yaw damping functions are controlled through the stall management/yaw damper (SMYD) computers.

Rudder

The rudder provides yaw control about the airplane's vertical axis. The A and B FLT CONTROL switches control hydraulic shutoff valves for the rudder and the standby rudder.

[737 modified rudder - not installed]
Each set of rudder pedals is mechanically connected by cables to the input levers of the main and standby rudder PCUs. The main rudder PCU is powered by hydraulic system A and B. The standby rudder PCU is powered by the standby hydraulic system. At speeds above approximately 135 kts, hydraulic system A pressure to the rudder PCU is reduced. This function limits full rudder authority in flight after takeoff and before landing.

[737 modified rudder- installed]
Each set of rudder pedals is mechanically connected by cables to the input levers of the main and standby rudder PCUs. The main PCU consists of two independent input rods, two individual control valves, and two separate actuators; one for Hydraulic system A and one for Hydraulic system B. The standby rudder PCU is controlled by a separate input rod and control valve and powered by the standby hydraulic system. All three input rods have individual jam override mechanisms that allows input commands to continue to be transferred to the remaining free input rods if an input rod is hindered or jammed.

[737 modified rudder - installed]
At speeds above approximately 135 kts, both hydraulic system A and B pressure are reduced within the main PCU. This function limits full rudder authority in flight after takeoff and before landing.

[737 modified rudder - installed]
The main rudder PCU contains a Force Fight Monitor (FFM) that detects opposing pressure (force fight) between A and B actuators. This may occur if either system A or B input is jammed or failed. The FFM output is used to automatically turn on the Standby Hydraulic pump pressurizing the standby PCU.

The standby rudder PCU is powered by the standby hydraulic system. The standby hydraulic system is provided as a backup if system A and/or B pressure is lost. With the standby PCU powered the pilot retains adequate rudder control capability. It can be operated manually through the FLT CONTROL switches or automatically. (Refer to Chapter 13, Hydraulics, Standby Hydraulic System)

Copyright © The Boeing Company. See title page for details.

[737 modified rudder- installed]
An amber STBY RUD ON light illuminates when the standby rudder hydraulic system is pressurized. STBY RUD ON light illumination activates Master Caution and Flight Control warning lights on the Systems Annunciation Panel.

Rudder Trim

The RUDDER trim control, located on the aft electronic panel, electrically repositions the rudder feel and centering unit which adjusts the rudder neutral position. The rudder pedals are displaced proportionately. The RUDDER TRIM indicator displays the rudder trim position in units.

Yaw Damper

The yaw damper system consists of a main and standby yaw damper. Both yaw dampers are controlled through Stall Management/Yaw Damper (SMYD) computers. The SMYD computers receive inputs from both ADIRUs, both control wheels and the YAW DAMPER switch. SMYDs provide yaw damper inputs to the main rudder power control unit (PCU) or standby rudder PCU, as appropriate.

Either yaw damper is capable of providing dutch roll prevention, gust damping and turn coordination. Yaw damper operation does not result in rudder pedal movement. Only main yaw damper inputs are shown on the yaw damper indicator. The pilot can override either main or standby yaw damper inputs using either the rudder pedals or trim inputs.

During normal operation the main yaw damper uses hydraulic system B and the SMYD computers provide continuous system monitoring. If the SMYD senses a system fault, the YAW DAMPER Switch is automatically moved to the OFF position, the amber YAW DAMPER light illuminates, the yaw damper is disconnected and the YAW DAMPER switch cannot be reset to ON. If hydraulic system B pressure is lost, the YAW DAMPER switch remains in the ON position until the B FLT CONTROL switch is positioned to OFF or STBY RUD. Then the YAW DAMPER switch disengages, the amber YAW DAMPER light illuminates and the YAW DAMPER switch cannot be reengaged.

During manual reversion flight (loss of hydraulic system A and B pressure), both FLT CONTROL switches are positioned to STBY RUD. In this case, the YAW DAMPER switch can be reset to ON and the standby hydraulic system powers the standby yaw damper.

Copyright © The Boeing Company. See title page for details.

[737 modified rudder- installed]

During manual reversion flight (loss of hydraulic system A and B pressure), both FLT CONTROL switches are positioned to STBY RUD. In this case, the YAW DAMPER switch can be reset to ON and the standby hydraulic system powers the standby yaw damper. During Standby Yaw Damper operation, movement of the control wheel sends a signal to the standby rudder PCU to move the rudder. This gives rudder assist to help turn the airplane when control of the ailerons is through manual reversion.

Yaw Control Schematic

[737 modified rudder - not installed]

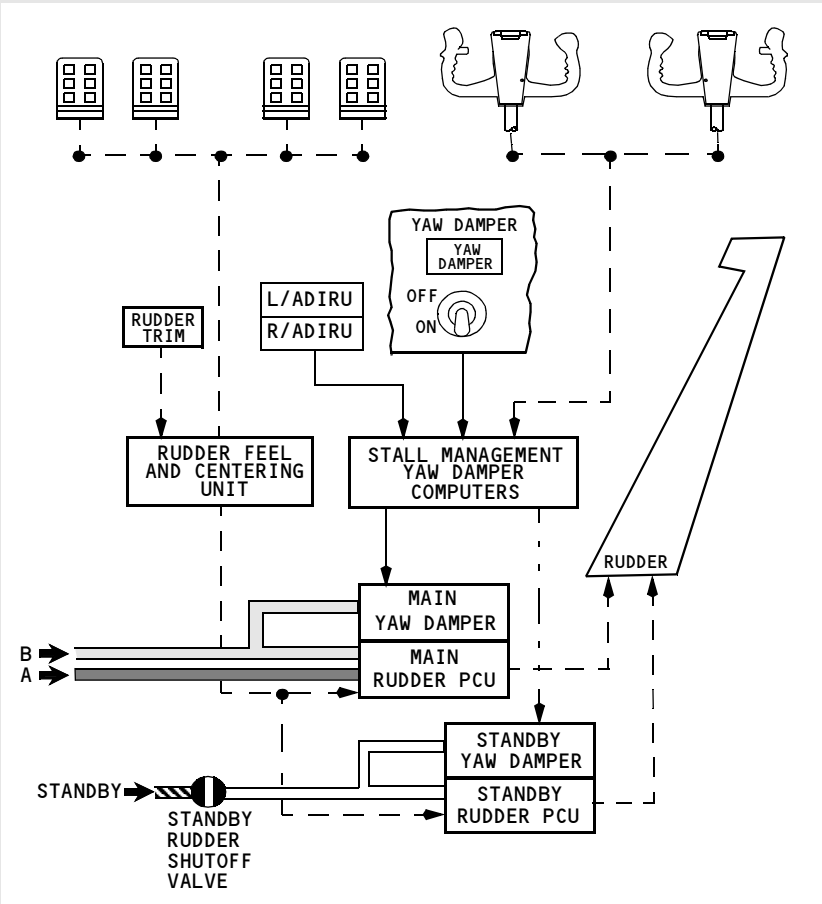

Copyright © The Boeing Company. See title page for details.

[737 modified rudder- installed]

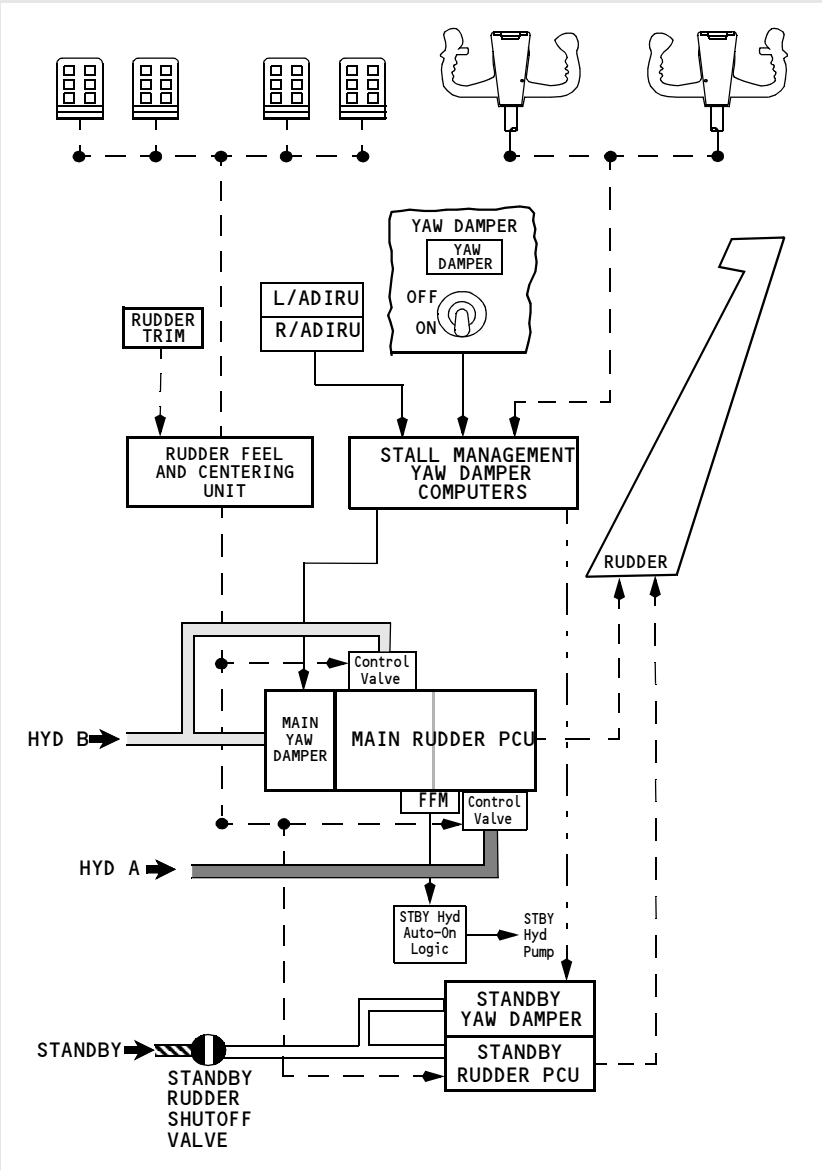

Copyright © The Boeing Company. See title page for details.

DO NOT USE FOR FLIGHT

Speed Brakes

The speed brakes consist of flight spoilers and ground spoilers. Hydraulic system A powers all four ground spoilers, two on the upper surface of each wing. The SPEED BRAKE lever controls the spoilers. When the SPEED BRAKE lever is actuated all the spoilers extend when the airplane is on the ground and only the flight spoilers extend when the airplane is in the air.

The SPEEDBRAKES EXTENDED light provides an indication of spoiler operation in-flight and on the ground. In-flight, the light illuminates to warn the crew that the speed brakes are extended while in the landing configuration or below 800 feet AGL. On the ground, the light illuminates when hydraulic pressure is sensed in the ground spoiler shutoff valve with the speed brake lever in the DOWN position.

In-Flight Operation

Operating the SPEED BRAKE lever in flight causes all flight spoiler panels to rise symmetrically to act as speed brakes. Caution should be exercised when deploying flight spoilers during a turn, as they greatly increase roll rate. When the speed brakes are in an intermediate position roll rates increase significantly. Moving the SPEED BRAKE lever beyond the FLIGHT DETENT causes buffeting and is prohibited in flight.

Ground Operation

During landing, the auto speed brake system operates when these conditions occur:

- SPEED BRAKE lever is in the ARMED position
- SPEED BRAKE ARMED light is illuminated
- radio altitude is less than 10 feet
- landing gear strut compresses on touchdown

  Note: Compression of any landing gear strut enables the flight spoilers to deploy. Compression of the right main landing gear strut enables the ground spoilers to deploy.
- both thrust levers are retarded to IDLE
- main landing gear wheels spin up (more than 60 kts).

The SPEED BRAKE lever automatically moves to the UP position and the spoilers deploy.

If a wheel spin-up signal is not detected, when the air/ground system senses ground mode (any gear strut compresses) the SPEED BRAKE lever moves to the UP position and flight spoiler panels deploy automatically. When the right main landing gear strut compresses, a mechanical linkage opens the ground spoiler shutoff valve and the ground spoilers deploy.

Copyright © The Boeing Company. See title page for details.

If the SPEED BRAKE lever is in the DOWN position during landing or rejected takeoff, the auto speed brake system operates when these conditions occur:

- main landing gear wheels spin up (more than 60 kts)
- both thrust levers are retarded to IDLE
- reverse thrust levers are positioned for reverse thrust.

The SPEED BRAKE lever automatically moves to the UP position and spoilers deploy.

After an RTO or landing, if either thrust lever is advanced, the SPEED BRAKE lever automatically moves to the DOWN detent and all spoiler panels retract. The spoiler panels may also be retracted by manually moving the SPEED BRAKE lever to the DOWN detent.

Copyright © The Boeing Company. See title page for details.

Speed Brakes Schematic

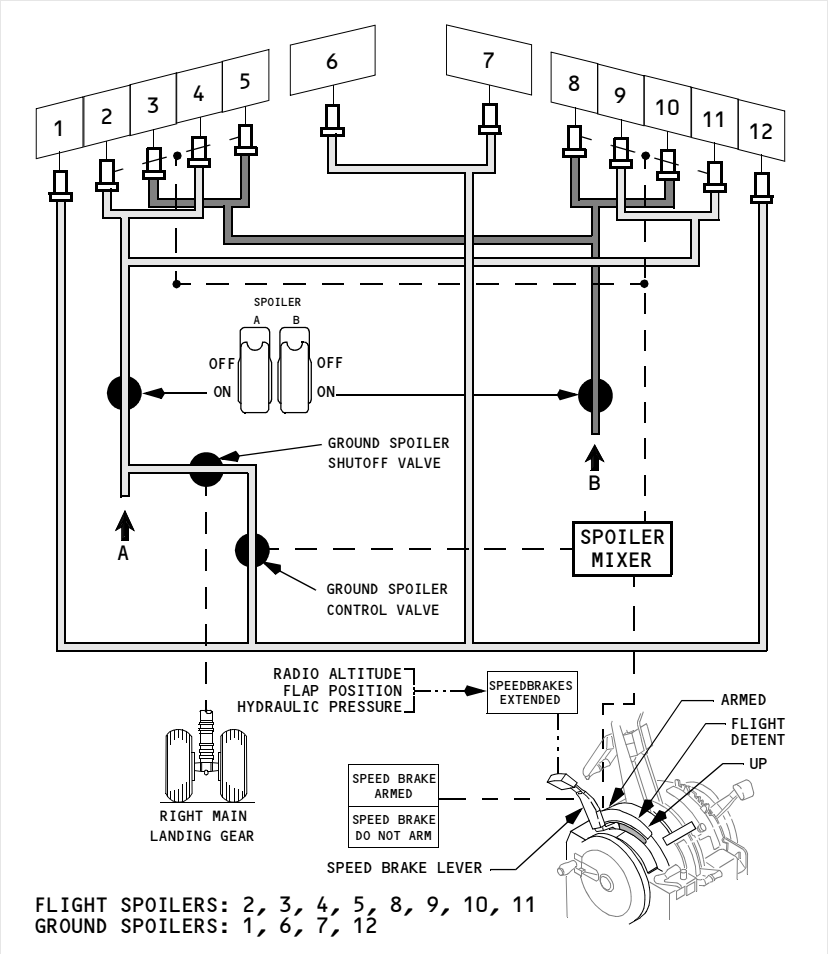

Copyright © The Boeing Company. See title page for details.

Flaps and Slats

The flaps and slats are high lift devices that increase wing lift and decrease stall speed during takeoff, low speed maneuvering and landing.

LE devices consist of four flaps and eight slats: two flaps inboard and four slats outboard of each engine. Slats extend to form a sealed or slotted leading edge depending on the TE flap setting. The TE devices consist of double slotted flaps inboard and outboard of each engine.

TE flap positions 1–15 provide increased lift; positions 15–40 provide increased lift and drag. Flap positions 30 and 40 are normal landing flap positions. Flaps 15 is used for some non-normal landing conditions.

To prevent excessive structural loads from increased Mach at higher altitude, flap extension above 20,000 feet should not be attempted.

Flap and Slat Sequencing

LE devices and TE flaps are normally extended and retracted by hydraulic power from system B. When the FLAP lever is in the UP detent, all flaps and LE devices are commanded to the retracted or up position. Moving the FLAP lever aft allows selection of flap detent positions 1, 2, 5, 10, 15, 25, 30 or 40. The LE devices deployment is sequenced as a function of TE flaps deployment.

When the FLAP lever is moved from the UP position to the 1, 2, or 5 position, the TE flaps extend to the commanded position and the LE:

- flaps extend to the full extended position and
- slats extend to the extend position.

When the FLAP lever is moved beyond the 5 position the TE flaps extend to the commanded position and the LE:

- flaps remain at the full extended position and
- slats extend to the full extended position.

The LE devices sequence is reversed upon retraction.

Mechanical gates hinder inadvertent FLAP lever movement beyond flaps 1 for one engine inoperative go–around and flaps 15 for normal go–around.

Indicator lights on the center instrument panel provide overall LE devices position status. The LE DEVICES annunciator panel on the aft overhead panel indicates the positions of the individual flaps and slats.

Flap Load Relief

The flaps/slat electronics unit (FSEU) provides a TE flap load relief function which protects the flaps from excessive air loads. This function is operative at the flaps 30 and flaps 40 positions only. The FLAP lever does not move, but the flap position indicator displays flap retraction and re–extension.

Copyright © The Boeing Company. See title page for details.

When the flaps are set at 40, the TE flaps:

- retract to 30 if airspeed exceeds 163 knots
- re–extend when airspeed is reduced below 158 knots.

When the flaps are set at 30, the TE flaps:

- retract to 25 if the airspeed exceeds 176 knots
- re–extend when airspeed is reduced below 171 knots.

[Option]
The FLAP LOAD RELIEF light illuminates when the TE flap load relief function is activated.

Autoslats

At flap positions 1, 2 and 5 an autoslat function is available that moves the LE slats to full extended if the airplane approaches a stall condition.

The autoslat system is designed to enhance airplane stall characteristics at high angles of attack during takeoff or approach to landing. When TE flaps 1 through 5 are selected, the LE slats are in the extend position. As the airplane approaches the stall angle, the slats automatically drive to the full extended position prior to stick shaker activation. The slats return to the extend position when the pitch angle is sufficiently reduced below the stall critical attitude.

The autoslat system is designed to enhance airplane stall characteristics at high angles of attack during takeoff or approach to landing. When TE flaps 1 through 5 are selected, the LE slats are in the extend position. As the airplane approaches the stall angle, the slats automatically begin driving to the full extended position prior to stick shaker activation. The slats return to the extend position when the pitch angle is sufficiently reduced below the stall critical attitude.

Autoslat operation is normally powered by hydraulic system B. An alternate source of power is provided by system A through a power transfer unit (PTU) if a loss of pressure is sensed from the higher volume system B engine driven pump. The PTU provides system A pressure to power a hydraulic motorized pump, pressurizing system B fluid to provide power for the autoslat operation. (Refer to Chapter 13, Hydraulics, Power Transfer Unit)

Alternate Extension

In the event that hydraulic system B fails, an alternate method of extending the LE devices and extending and retracting the TE flaps is provided.

Copyright © The Boeing Company. See title page for details.

The TE flaps can be operated electrically through the use of two alternate flap switches. The guarded ALTERNATE FLAPS master switch closes a flap bypass valve to prevent hydraulic lock of the flap drive unit and arms the alternate flaps position switch. The ALTERNATE FLAPS position switch controls an electric motor that extends or retracts the TE flaps. The switch must be held in the DOWN position until the flaps reach the desired position. No asymmetry or skew protection is provided through the alternate (electrical) flap drive system.

When using alternate flap extension the LE flaps and slats are driven to the full extended position using power from the standby hydraulic system. In this case the ALTERNATE FLAPS master switch energizes the standby pump and the ALTERNATE FLAPS position switch, held in the down position momentarily, fully extends the LE devices.

Note: The LE devices cannot be retracted by the standby hydraulic system.

Copyright © The Boeing Company. See title page for details.

Leading Edge Devices and Trailing Edge Flaps Schematic

[Option - FLAP LOAD RELIEF light]

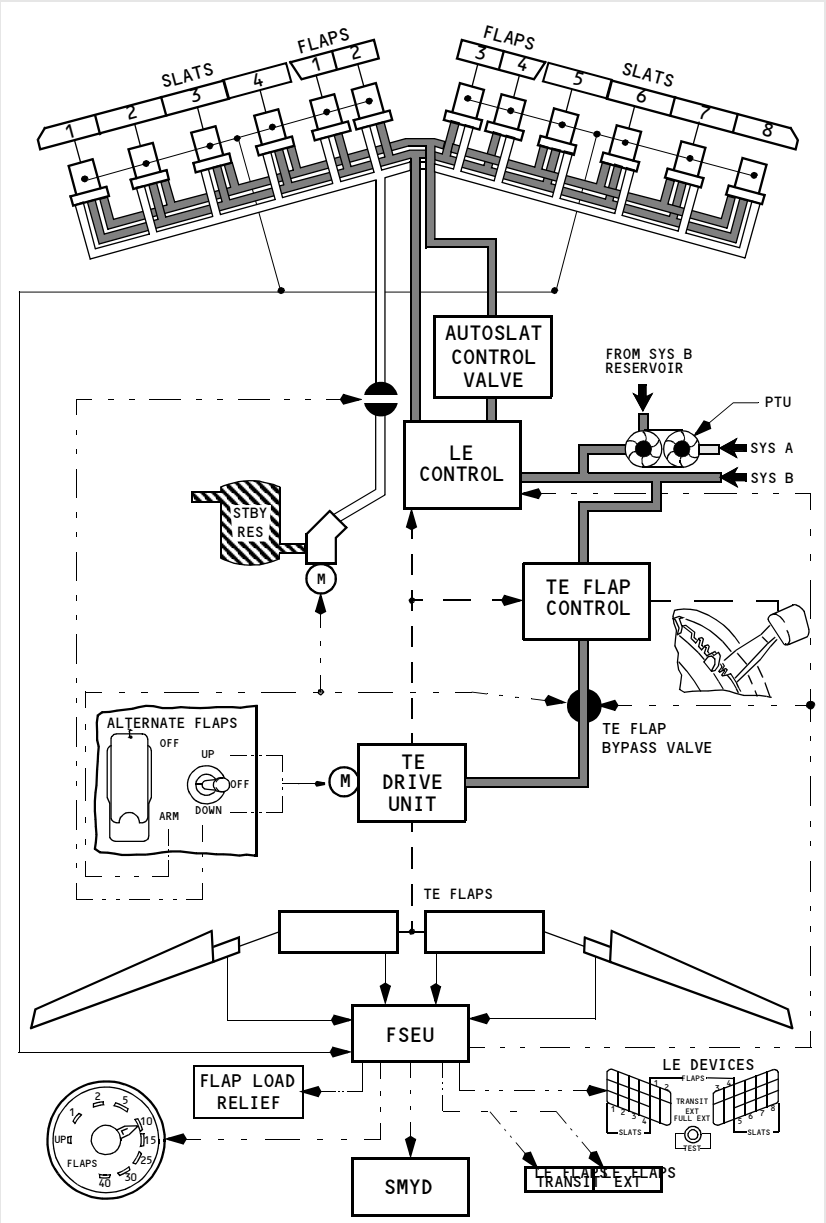

Copyright © The Boeing Company. See title page for details.

Asymmetry and Skew Detection, Protection and Indication

The FSEU monitors the TE flaps for asymmetry and skew conditions. It also monitors the LE devices for improper position and skew conditions on slats 2 through 7. If a flap on one wing does not align with the symmetrical flap on the other wing, there is a flap asymmetry condition. A skew condition occurs when a TE flap or LE slat panel does not operate at the same rate causing the panel to twist during extension or retraction.

Trailing Edge Flap Asymmetry and Skew

When the FSEU detects a trailing edge asymmetry or skew condition the FSEU:

- closes the TE flap bypass valve
- displays a needle split on the flap position indicator.

Leading Edge Device Improper Position or Skew

When the FSEU detects a LE device in an improper position or a LE slat skew condition, the LE FLAPS TRANSIT light remains illuminated and one of the following indications is displayed on the LE DEVICES annunciator panel:

- amber TRANSIT light illuminated
- incorrect green EXT or FULL EXT light illuminated
- no light illuminated.

There is no skew detection of the outboard slats, 1 and 8, or for the LE flaps. Slat skew detection is inhibited during autoslat operations.

Uncommanded Motion Detection, Protection and Indication

The FSEU provides protection from uncommanded motion by the LE devices or TE flaps.

Leading Edge Uncommanded Motion

Uncommanded motion is detected when no TE flap position or autoslat command is present and:

- two LE flaps move on one wing, or
- two or more slats move on one wing.

The FSEU shuts down the LE control and illuminates the amber LE FLAPS TRANSIT light.

In addition, to prevent uncommanded motion from occurring on the LE devices during cruise, the FSEU maintains pressure on the retract lines and depressurizes the extend and full extend lines.

Copyright © The Boeing Company. See title page for details.

DO NOT USE FOR FLIGHT

Trailing Edge Uncommanded Motion

Uncommanded motion is detected when no FLAP lever or flap load relief command is present and the TE flaps:

- move away from the commanded position
- continue to move after reaching a commanded position, or
- move in a direction opposite to that commanded.

The FSEU shuts down the TE drive unit by closing the TE flap bypass valve. The TE flap shutdown cannot be reset by the flight crew and they must use the alternate flap system to control TE flaps. The shutdown is indicated by the flap position indicator disagreeing with the FLAP lever position. There is no flap needle split.

Copyright © The Boeing Company. See title page for details.

EFIS/Map – Controls and Indicators 10.10.1

EFIS/Map Display System – Overview 10.10.1
Captain Outboard Display 10.10.2
Captain Inboard Display 10.10.3
First Officer Inboard Display. 10.10.4
First Officer Outboard Display 10.10.5
Compact EFIS Format 10.10.6

Electronic Flight Instrument System (EFIS) – Mach/Airspeed Indicator (MASI) 10.10.7
Mach/Airspeed Indicator – General. 10.10.7
Mach/Airspeed Indicator – Takeoff. 10.10.9
Mach/Airspeed Indicator – Approach 10.10.11
Mach/Airspeed Indicator – IAS Disagree Alert 10.10.12
Mach/Airspeed Indicator Failure Flags 10.10.12

EFIS – Attitude Indicator 10.10.13
Attitude Indicator – General 10.10.13
Attitude Indicator – LNAV/VNAV Deviation Indicators 10.10.15
Attitude Indicator – Instrument Landing System Indications. 10.10.17
Expanded Localizer Indications. 10.10.19
Attitude Indicator Failure Flags. 10.10.20
Traffic Alert and Collision Avoidance Indications 10.10.21
GPWS Annunciations 10.10.22

EFIS – Altimeter 10.10.22
Altimeter – General 10.10.22
Altimeter – Altitude Disagree Alert. 10.10.24
Altimeter Failure Flag 10.10.24

EFIS – Vertical Speed Indicator 10.10.25
Vertical Speed Indicator – General 10.10.25
Vertical Speed Indicator Failure Flag 10.10.26

Copyright © The Boeing Company. See title page for details.

EFIS – Marker Beacon Indications 10.10.26
Marker Beacons Indications. 10.10.26
Navigation Displays – Horizontal Situation Indicator (HSI). 10.10.27
Horizontal Situation Indicator – General 10.10.27
Horizontal Situation Indicator – Compact Display 10.10.28
Horizontal Situation Indicator Failure Flags 10.10.29
Navigation Displays – Radio Distance Magnetic Indicator (RDMI) 10.10.30
Radio Distance Magnetic Indicator – General 10.10.30
Radio Distance Magnetic Indicator Failure Flags 10.10.31
Navigation Displays – MAP Mode 10.10.32
Expanded MAP Mode 10.10.32
Center MAP Mode 10.10.34
Navigation Displays – Approach Mode 10.10.36
Expanded Approach Mode. 10.10.36
Center Approach Mode 10.10.37
Navigation Displays – VOR Mode 10.10.39
Expanded VOR Mode 10.10.39
Center VOR Mode 10.10.40
Navigation Displays – Plan Mode. 10.10.41
Plan Mode 10.10.41
Navigation Displays – Advisory Messages. 10.10.42
Mode/Frequency Disagree Annunciation 10.10.42
Navigation Advisory Messages 10.10.43
TCAS Messages 10.10.44
Look-Ahead Terrain Messages (GPWS) 10.10.45
Predictive Windshear System (PWS) Message 10.10.46
Navigation Displays –Failure Indications and Flags. 10.10.47
Failure Flags – Expanded MAP, Center MAP, Expanded APP, Expanded VOR Modes 10.10.47
Failure Flags – Center APP and Center VOR Modes 10.10.49
Additional Flags and Annunciations 10.10.50

Copyright © The Boeing Company. See title page for details.

Displays Control Panel Annunciation 10.10.50
Display System Annunciations 10.10.51
Instrument Switch Annunciation 10.10.52

PFD/ND – Displays 10.11.1

PFD/ND Display System – Overview 10.11.1
Captain Outboard Display 10.11.2
Captain Inboard Display 10.11.3
First Officer Inboard Display. 10.11.4
First Officer Outboard Display 10.11.5

Primary Flight Display (PFD)– PFD Airspeed Indications 10.11.6
PFD Airspeed Indications – General 10.11.6
PFD Airspeed Indications – Takeoff and Approach 10.11.8

PFD Angle of Attack (AOA) Indications 10.11.11
Angle of Attack Indications - General. 10.11.11

PFD – Attitude Indications 10.11.12
Attitude Indications – General. 10.11.12
PFD LNAV/VNAV Deviation Indications. 10.11.14
PFD Instrument Landing System Indications 10.11.16
Expanded Localizer Indications 10.11.18
PFD Radio Altitude Indications 10.11.18
Traffic Alert and Collision Avoidance Indications 10.11.19
GPWS Annunciations 10.11.20

PFD – Altitude Indications 10.11.21
Altitude Indications– General 10.11.21
PFD Barometric Indications 10.11.22
Landing Altitude/Minimums Indications 10.11.23

PFD – Vertical Speed Indications 10.11.25
Vertical Speed Indications – General. 10.11.25

PFD - Heading and Track Indications. 10.11.26
Heading and Track Indications– General 10.11.26

PFD Failure Flags 10.11.27

Additional Annunciations and Alerts 10.11.32

Copyright © The Boeing Company. See title page for details.

Displays Control Panel Annunciation 10.11.32
Display System Annunciations 10.11.33
Instrument Switch Annunciation 10.11.34
Airspeed Disagree Alert 10.11.35
Altitude Disagree Alert 10.11.36
Navigation Displays – MAP Mode 10.11.36
Expanded and Center MAP Modes 10.11.37
Navigation Displays – Approach Mode 10.11.39
Expanded and Center Approach Modes 10.11.39
Navigation Displays – VOR Mode 10.11.41
Expanded and Center VOR Modes 10.11.41
Navigation Displays – Plan Mode 10.11.43
Plan Mode 10.11.43
Navigation Displays – Advisory Messages 10.11.44
Navigation Advisory Messages 10.11.44
Mode/Frequency Disagree Annunciation 10.11.45
TCAS Messages 10.11.46
Look-Ahead Terrain Messages (GPWS) 10.11.47
Predictive Windshear System (PWS) Message 10.11.48
Navigation Displays – Failure Indications and Flags 10.11.49
Expanded MAP, Center MAP, Expanded APP, Expanded VOR Modes 10.11.49
ND Failure Flags – Center APP and Center VOR Modes 10.11.51

Head-Up Display System - Displays 10.12.1

System Components 10.12.1
Combiner Display 10.12.2
Primary (PRI) Mode Display 10.12.2
Approach Mode Displays 10.12.9
Failure Indications and Flags 10.12.11
Control Panel Display 10.12.11

Copyright © The Boeing Company. See title page for details.

EFIS Instruments – Controls and Indicators 10.15.1

EFIS Control Panel (EFIS/Map Display) 10.15.1
EFIS Control Panel Controls – Flight Instrument Displays 10.15.1
EFIS Control Panel Controls – Navigation Displays 10.15.2
Displays Source Panel 10.15.4
Display Select Panels 10.15.5
Speed Reference Selector 10.15.6
Display Brightness Controls 10.15.7
Captain Brightness Controls 10.15.7
First Officer Brightness Controls. 10.15.8
Standby Flight Instruments 10.15.10
Standby Magnetic Compass 10.15.10
Integrated Standby Flight Display 10.15.11
Standby Radio Magnetic Indicator 10.15.15
Clock 10.15.16
Clock Switch 10.15.18
Timer 10.15.18
Flight Recorder 10.15.19

EFIS Instruments (PFD) – Controls 10.16.1

EFIS Control Panel (PFD/ND Display) 10.16.1
EFIS Control Panel Controls – Flight Instrument Displays 10.16.1
EFIS Control Panel Controls – Navigation Displays 10.16.2
Displays Source Panel 10.16.4
Display Select Panels 10.16.5
Speed Reference Selector 10.16.6
Display Brightness Controls 10.16.7
Captain Brightness Controls 10.16.7
First Officer Brightness Controls. 10.16.8
Standby Flight Instruments 10.16.10

Copyright © The Boeing Company. See title page for details.

Standby Magnetic Compass 10.16.10
Integrated Standby Flight Display 10.16.11
Standby Radio Magnetic Indicator 10.16.15
Clock 10.16.16
Clock Switch 10.16.18
Timer 10.16.19
Flight Recorder 10.16.19

Head-Up Display System – Controls 10.17.1
Head-Up Display Control Panel Controls – Flight Instrument Displays 10.17.1
HUD Annunciator Panel 10.17.2
Combiner Controls 10.17.3

EFIS/Map System Description 10.20.1
Introduction 10.20.1
Display Brightness Control 10.20.1
DISPLAYS SOURCE Panel 10.20.2
EFIS Control Panels 10.20.3
Display Select Panel 10.20.3
Display Selection and Control Examples 10.20.4
Normal Display Configuration 10.20.4
Display Unit Failure Automatic Switching 10.20.5
EFIS Control Panel 10.20.7
Outboard Display Switching 10.20.8
Inboard Display Switching 10.20.9
Lower Display Switching 10.20.11
Display System Information Sources 10.20.12
Air Data Inertial Reference System (ADIRS) 10.20.12
Standby Flight Instruments 10.20.13
Standby Magnetic Compass 10.20.13
Integrated Standby Flight Display (ISFD) 10.20.14
Standby Radio Magnetic Indicator 10.20.14

Copyright © The Boeing Company. See title page for details.

Clocks 10.20.15
Clock Switch 10.20.15
Flight Recorder 10.20.15
Aircraft Condition Monitoring System (ACMS) 10.20.15

PFD/ND System Description 10.21.1

Introduction 10.21.1
Display Brightness Control 10.21.1
DISPLAYS SOURCE Panel 10.21.2
EFIS Control Panels 10.21.3
Display Select Panel 10.21.3
Display Selection and Control Examples 10.21.4
Normal Display Configuration 10.21.4
Display Unit Failure Automatic Switching 10.21.5
EFIS Control Panel 10.21.7
Outboard Display Switching 10.21.8
Inboard Display Switching 10.21.9
Lower Display Switching 10.21.11
Display System Information Sources 10.21.12
Air Data Inertial Reference System (ADIRS) 10.21.12
Standby Flight Instruments 10.21.13
Standby Magnetic Compass 10.21.14
Integrated Standby Flight Display (ISFD) 10.21.14
Standby Radio Magnetic Indicator 10.21.15
Clocks 10.21.15
Clock Switch 10.21.15
Flight Recorder 10.21.15
Aircraft Condition Monitoring System (ACMS) 10.21.16

Head-Up Display System Description 10.22.1

Introduction 10.22.1
HUD Computer 10.22.1
Drive Electronics Unit 10.22.2

Copyright © The Boeing Company. See title page for details.

Overhead Unit (OHU) 10.22.2
Combiner 10.22.2
Control Panel 10.22.2
Annunciator Panel 10.22.2
Modes of Operation 10.22.2
Primary (PRI) Mode 10.22.3
AIII Approach Mode 10.22.4
IMC Mode 10.22.5
VMC Mode 10.22.5
TCAS Resolution Advisory 10.22.6
Failure Flags and Data Source Annunciations 10.22.6

Electronic Flight Instrument System (EFIS) 10.30.1
Introduction 10.30.1
Airspeed 10.30.1
Attitude 10.30.1
Steering Indications 10.30.2
Instrument Landing System Indications 10.30.2
Approach Minimums 10.30.3
Radio Altitude 10.30.3
Radio Altitude Alert 10.30.3
Altitude 10.30.3
Vertical Speed 10.30.4
Traffic Alert and Collision Avoidance (TCAS) Indications 10.30.4
GPWS Warnings 10.30.4

Primary Flight Display (PFD) 10.31.1
Introduction 10.31.1
Airspeed 10.31.1
Attitude 10.31.2
Angle of Attack 10.31.2

Copyright © The Boeing Company. See title page for details.

Steering Indications 10.31.2
Instrument Landing System Indications 10.31.3
Approach Minimums 10.31.4
Radio Altitude 10.31.4
Altitude 10.31.4
Vertical Speed 10.31.5
Heading/Track Indications 10.31.5
Traffic Alert and Collision Avoidance (TCAS) Indications 10.31.5
GPWS Warnings 10.31.5

Navigation Displays 10.40.1

Introduction 10.40.1
Horizontal Situation Indicator (HSI) 10.40.1
Radio Distance Magnetic Indicator (RDMI) 10.40.1
Navigation Display – MAP Mode 10.40.1
Navigation Data Points 10.40.1
VOR and Approach Modes 10.40.2
Plan Mode 10.40.2
Navigation Display Information 10.40.2
Heading 10.40.2
Track 10.40.2
Traffic 10.40.2
Weather Radar 10.40.2
Failure Flags and Messages 10.40.2
Navigation Display Symbology 10.40.3
Heading, Track, and Speed 10.40.3
Radio Navigation 10.40.5
MAP 10.40.7
Look-Ahead Terrain 10.40.15
Predictive Windshear 10.40.17
TCAS 10.40.18

Copyright © The Boeing Company. See title page for details.

PFD/ND Navigation Displays 10.41.1

Introduction 10.41.1

Map Mode 10.41.1

Navigation Data Points 10.41.1

VOR and Approach Modes 10.41.1

Plan Mode 10.41.1

ND Information 10.41.2

Heading 10.41.2

Track. 10.41.2

Traffic 10.41.2

Weather Radar 10.41.2

Failure Flags and Messages 10.41.2

ND Symbology 10.41.2

Heading, Track, and Speed. 10.41.3

Radio Navigation 10.41.5

Map 10.41.8

Look-Ahead Terrain 10.41.14

Predictive Windshear 10.41.16

TCAS 10.41.17

Head-Up Display System, Symbology 10.42.1

Introduction 10.42.1

Head-Up Guidance Display Symbology 10.42.1

TCAS Resolution Advisory 10.42.14

Failure Flags and Data Source Annunciations 10.42.15

Copyright © The Boeing Company. See title page for details.

EFIS/Map Display System – Overview

Display Units

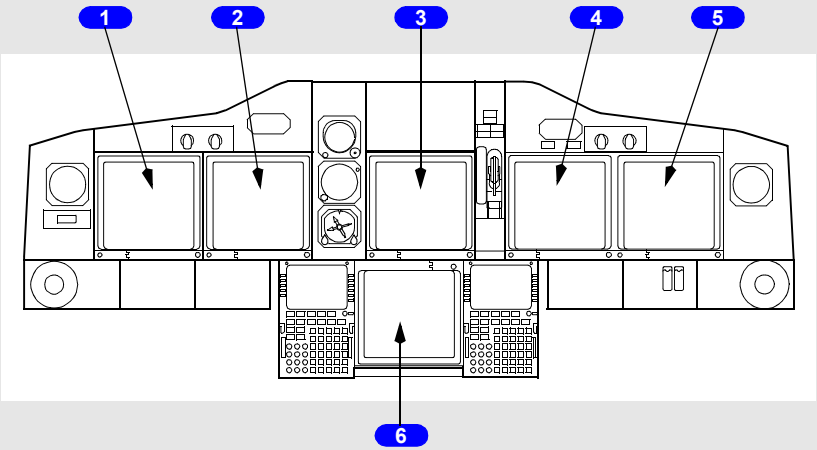

LEFT, CENTER and RIGHT
FORWARD PANELS

1 Captain Outboard Display Unit

2 Captain Inboard Display Unit

3 Upper Display Unit

4 First Officer Inboard Display Unit

5 First Officer Outboard Display Unit

6 Lower Display Unit

Copyright © The Boeing Company. See title page for details.

Captain Outboard Display

[Option - Split axis command bars]

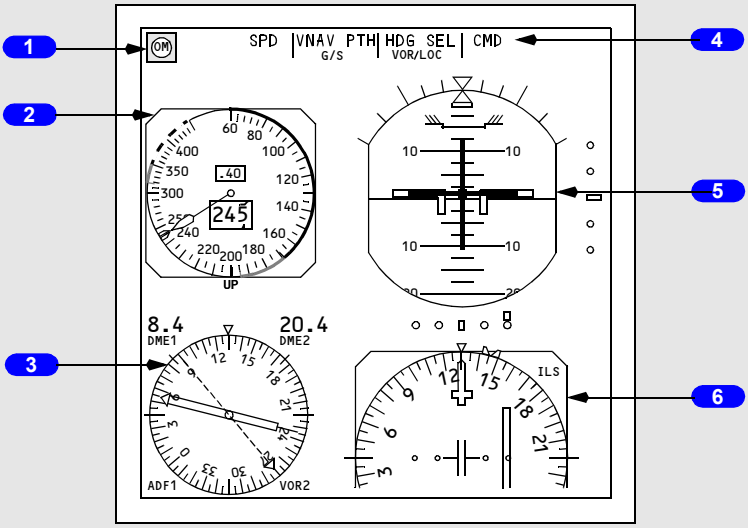

LEFT FORWARD PANEL

1 Marker Beacon

2 Mach/Airspeed Indicator

3 Radio Distance Magnetic Indicator

4 Flight Mode Annunciations

Refer to Chapter 4, Automatic Flight

5 Attitude Indicator

6 Horizontal Situation Indicator

Copyright © The Boeing Company. See title page for details.

Captain Inboard Display

[Option - Heading-up display]

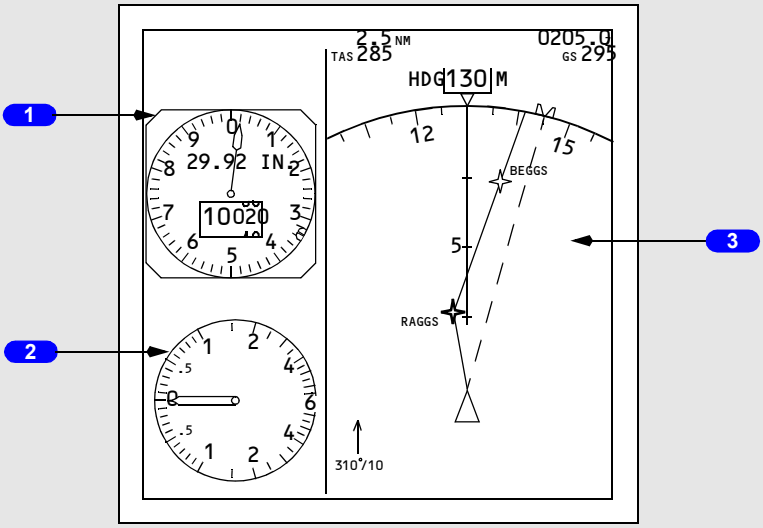

LEFT FORWARD PANEL

1 Altimeter

2 Vertical Speed Indicator

3 Navigation Display

Displays approach, VOR, moving map, or static map as selected on the EFIS control panel.

Copyright © The Boeing Company. See title page for details.

First Officer Inboard Display

[Option - Heading-up display]

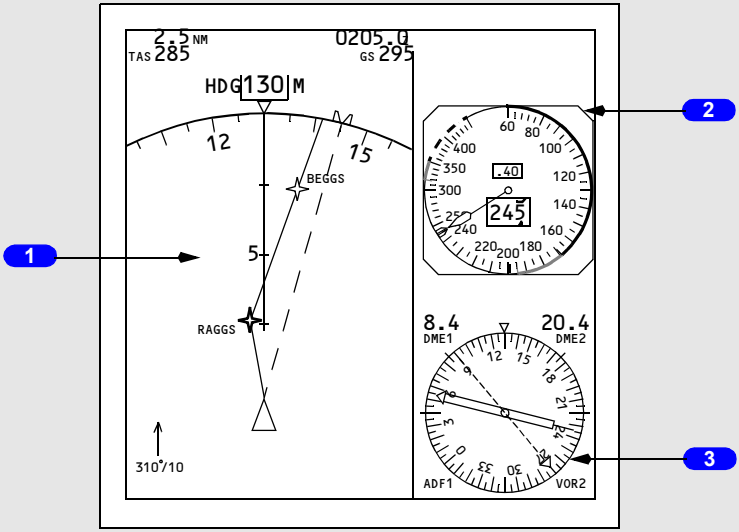

RIGHT FORWARD PANEL

1 Navigation Display

Displays approach, VOR, moving map, or static map as selected on the EFIS control panel.

2 Mach/Airspeed Indicator

3 Radio Distance Magnetic Indicator

Copyright © The Boeing Company. See title page for details.

First Officer Outboard Display

[Option - Split axis command bars]

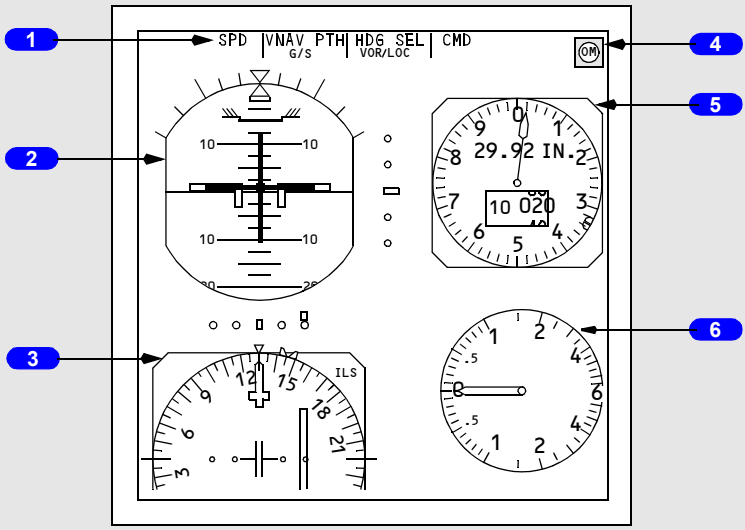

RIGHT FORWARD PANEL

1 Flight Mode Annunciations

Refer to Chapter 4, Automatic Flight

2 Attitude Indicator

3 Horizontal Situation Indicator

4 Marker Beacon

5 Altimeter

6 Vertical Speed Indicator

Copyright © The Boeing Company. See title page for details.

Compact EFIS Format

The compact EFIS format is displayed automatically upon failure of either an inboard or an outboard display unit. The compact format can also be selected manually with the MAIN PANEL DUs selectors on the display select panel.

In the compact format, a full rose HSI is displayed. Other displays are about 25% smaller than normal.

[Option - Split axis command bars]

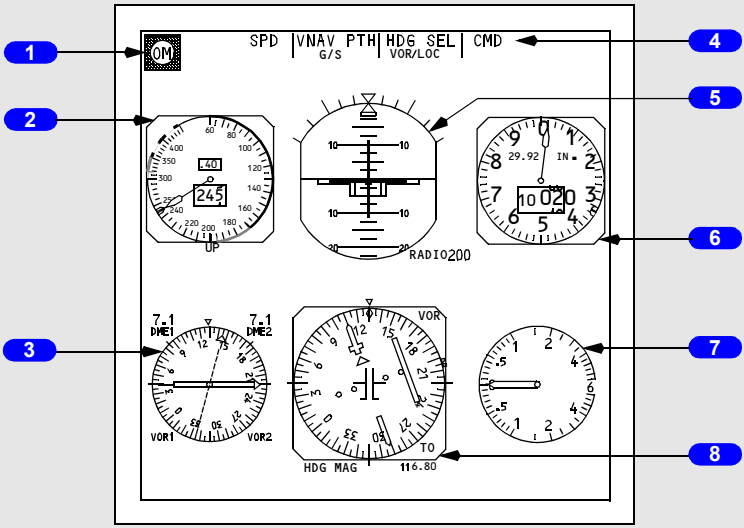

LEFT and RIGHT FORWARD PANELS

1 **Marker Beacon**

2 **Mach/Airspeed Indicator**

3 **Radio Distance Magnetic Indicator**

4 **Flight Mode Annunciations**

5 **Attitude Indicator**

6 **Altimeter**

Copyright © The Boeing Company. See title page for details.

7 Vertical Speed Indicator

8 Horizontal Situation Indicator

Electronic Flight Instrument System (EFIS) – Mach/Airspeed Indicator (MASI)

Mach/Airspeed Indicator – General

The mach/airspeed indicator displays air data inertial reference system (ADIRS) airspeed and other airspeed related information.

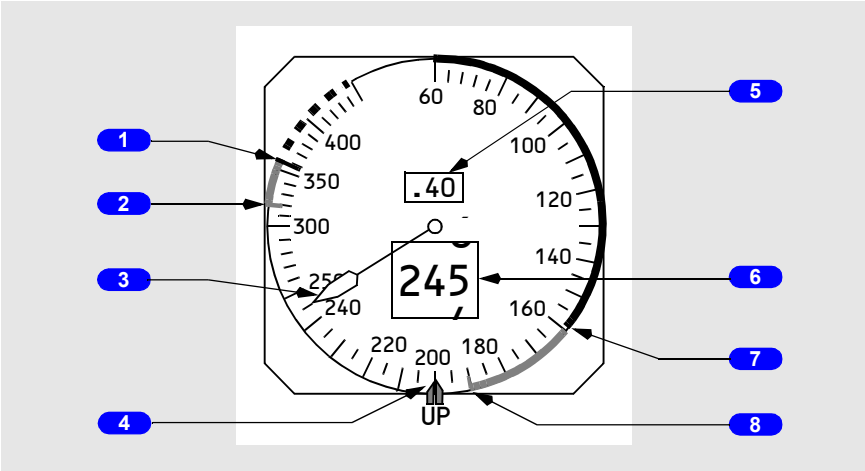

1 Maximum Operating Speed (red and white)

Start of the arc indicates the maximum speed as limited by the lowest of the following:

- Vmo/Mmo
- landing gear placard speed
- flap placard speed.

2 High Speed Buffet/Flap Extension Speed (amber)

At high altitudes and flaps up, the start of the arc indicates the airspeed that provides a 0.3 g maneuver margin to high speed buffet.

When flaps are not up, the start of the arc indicates flap extension placard speed for the next normal flap setting. The arc is removed when the flap handle is moved to the landing flap selected on the APPROACH REF page or when the flap lever has been moved to flaps 30 or 40.

Copyright © The Boeing Company. See title page for details.

[Option] - CDS Software Upgrade - Block point 2002
When flaps are not up, the start of the arc indicates flap extension placard speed for the next normal flap setting. The arc is removed when the flaps reach the landing flap selected on the APPROACH REF page or when the flaps reach flaps 40.

3 Airspeed Pointer (white)

Indicates current calibrated airspeed in knots.

4 Airspeed Cursor (magenta)

Displays target airspeed:

- indicates the airspeed manually selected in the IAS/MACH window
- indicates the FMC computed airspeed when the IAS/MACH window is blank.

5 Mach Digital Counter (white)

Indicates current Mach number:

- displays when airspeed increases above 0.40 Mach
- blanks when airspeed decreases below 0.38 Mach.

6 Airspeed Digital Counter (white)

Indicates current calibrated airspeed in knots.

7 Stick Shaker Speed (red)

Red index mark indicates the speed at which stick shaker occurs.

8 Minimum Maneuver Speed (amber)

Amber index mark indicates minimum maneuver speed.

Inhibited on takeoff until first flap retraction or valid VREF entered.

Copyright © The Boeing Company. See title page for details.

Mach/Airspeed Indicator – Takeoff

[Option - 80 knot speed bug]

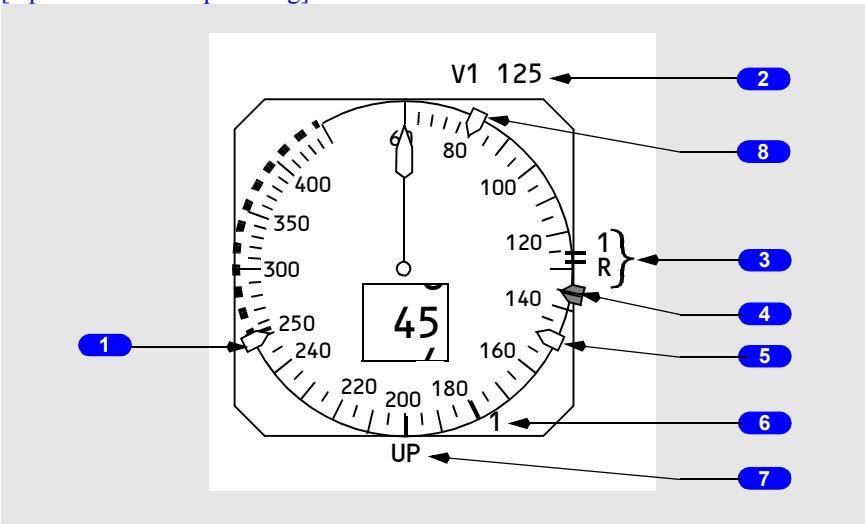

1 Bug 5 (white)

Displayed if the speed reference selector on the engine display control panel is in the bug 5 position and a value greater than 60 knots has been selected. Not available if the speed reference selector is in the AUTO position.

2 Speed Reference Display (green)

Displayed if the airspeed and/or weight is entered via the speed reference selector on the engine display control panel:

- on the ground, V1, VR, and takeoff gross weight may be selected; if VREF is selected, INVALID ENTRY is displayed
- in flight, VREF and landing gross weight may be selected; if V1 or VR is selected, INVALID ENTRY is displayed
- removed when the speed reference selector is moved to the SET position.

3 Takeoff Reference Speeds (green)

Indicates V1 (decision speed) and VR (rotation speed) as selected on the CDU TAKEOFF REF page (refer to Chapter 11, Flight Management, Navigation) or as set with the speed reference selector on the engine display control panel:

- amber NO VSPD flag is displayed on the ground if V1 or VR is not selected on the CDU or is not set with the speed reference selector
- displayed for takeoff when speed is greater than 80 knots
- removed at lift–off.

Copyright © The Boeing Company. See title page for details.

[Option - V1 aural enabled]

- V1 is automatically called out by voice aural.

Note: The Look Ahead Terrain Alerting system must be incorporated for the automatic V1 aural callout to be functional.

4 Airspeed Cursor (magenta)

Set with the speed selector on the mode control panel.

5 V2+15 (white)

Displayed for takeoff.

Removed when either of the following occurs:

- at first flap retraction
- when VREF is entered.

6 Flap Maneuvering Speed (green)

Indicates flap maneuvering speed for the displayed flap position:

- when the V2+15 bug is displayed for takeoff, the flap maneuvering speed bug for the current flap setting is not displayed except for a flaps 1 takeoff
- flap bugs inhibited if less than VREF +4.

7 Flaps Up Airspeed (green)

Displayed after zero fuel weight is entered in the CDU and takeoff gross weight is calculated, or after takeoff gross weight is set with the speed reference selector.

Not displayed above approximately 20,000 feet altitude.

8 80 Knots Airspeed Bug (white)
[Option - 80 knot speed bug]

Indicates 80 knots:

- displayed automatically during preflight
- removed at first flap retraction or when VREF is entered.

Copyright © The Boeing Company. See title page for details.

Mach/Airspeed Indicator – Approach

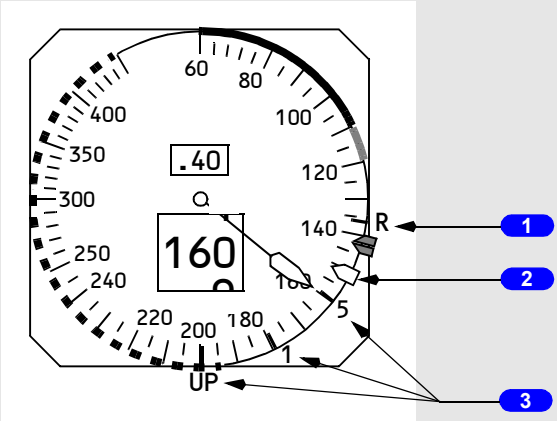

1 Landing Reference Speed (green)

Indicates VREF (reference speed) as selected on the CDU APPROACH REF page (refer to Chapter 11, Flight Management, Navigation) or as set with the speed reference selector on the engine display control panel.

2 VREF+15

Displayed after selection of VREF.

3 Flap Maneuvering Speeds (green)

Indicate flap maneuvering speeds for the displayed flap position:

- not shown if less than or equal to VREF+4
- numbered flap maneuvering speed bugs are removed when the flap lever is moved to flaps 30 or 40.

Copyright © The Boeing Company. See title page for details.

Mach/Airspeed Indicator – IAS Disagree Alert

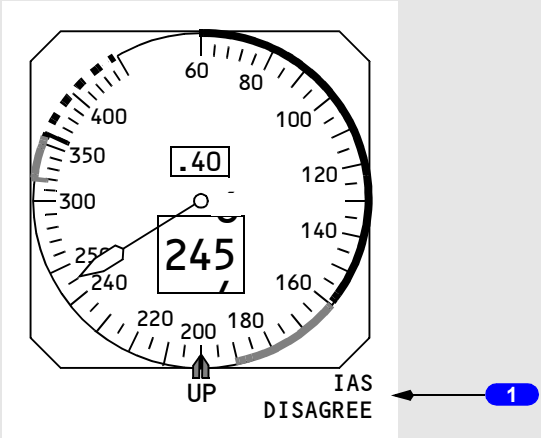

1 Airspeed Disagree Alert (amber)

Indicates the Captain's and F/O's airspeed indications disagree by more than 5 knots for 5 continuous seconds.

Mach/Airspeed Indicator Failure Flags

The flag replaces the appropriate display to indicate source system failure or lack of computed information.

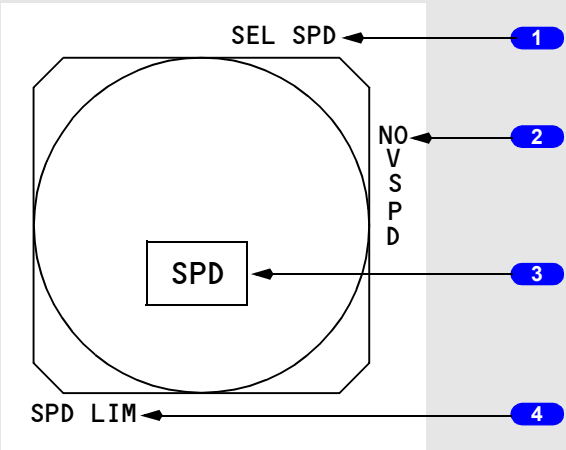

Copyright © The Boeing Company. See title page for details.

1 Selected Speed Flag (amber)

The airspeed cursor is inoperative. The airspeed cursor is removed.

2 No VSPD Flag (amber)

V1 (decision speed) or VR (rotation speed) has not been entered or is invalid.

3 Speed Flag (amber)

The Mach/airspeed indicator is inoperative. All indicator markings are removed.

4 Speed Limit Flag (amber)

Displays related with stick shaker or maximum operating speed has failed:

- if the stick shaker warning has failed, the red stick shaker speed arc is removed
- if the maximum operating speed has failed, the red and white maximum operating speed arc is removed.

EFIS – Attitude Indicator

Attitude Indicator – General

The attitude indicator displays ADIRS attitude information.

[Option - Split axis command bars, flight path vector]

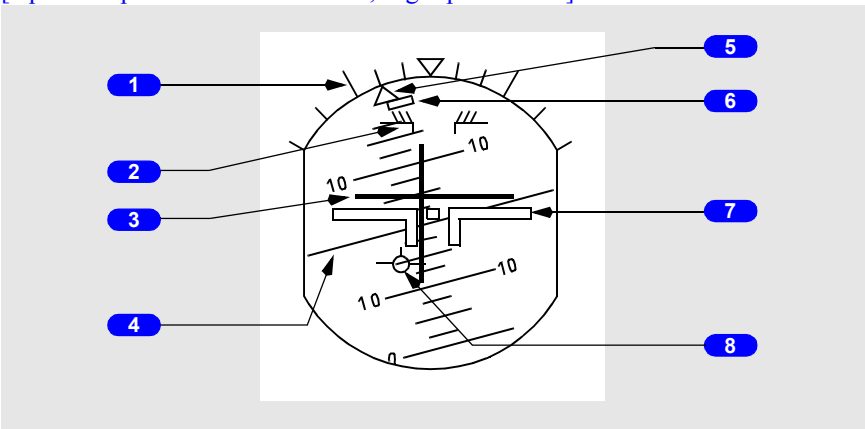

1 Bank Scale (white)

Provides fixed reference for the bank pointer; scale marks are at 0, 10, 20, 30, 45, and 60 degrees.

Copyright © The Boeing Company. See title page for details.

2 Pitch Limit Indicator (amber)

Indicates pitch limit (stick shaker activation for existing flight conditions).

- displayed when flaps are not up

[Option - PLI pop-up]

- displayed at slow speed with flaps up

3 Flight Director (magenta)

Indicates flight director steering commands. (Refer to Chapter 4, Automatic Flight.)

4 Horizon Line and Pitch Scale (white)

Indicates the horizon relative to the airplane symbol; pitch scale is in 2.5 degree increments.

5 Bank Pointer

Indicates bank angle; fills and turns amber if bank angle is 35 degrees or more.

6 Slip/Skid Indication

Displaces beneath the bank pointer to indicate slip or skid:

- fills white at full scale deflection
- turns amber if bank angle is 35 degrees or more; fills amber if the slip/skid indicator is also at full scale deflection.

7 Airplane Symbol

Indicates airplane attitude relative to the horizon.

8 Flight Path Vector (FPV) Indication (white)
[Option - Flight path vector]

Displays flight path angle and drift when selected on the EFIS control panel:

- flight path angle is displayed relative to the horizon line
- drift angle is displayed relative to display center.

Copyright © The Boeing Company. See title page for details.

Attitude Indicator – LNAV/VNAV Deviation Indicators

[Option - LNAV/VNAV deviation scale and pointer]

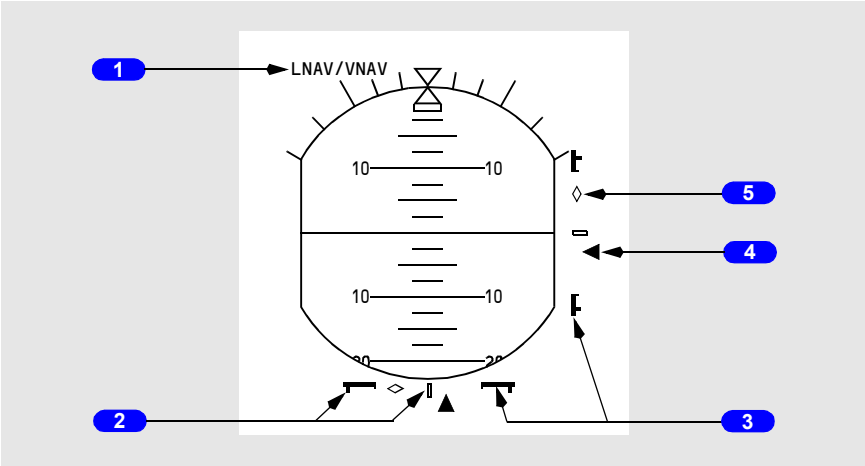

1 Scale ID Annunciation (white)

- displayed in response to engaged pitch and role FMA's.
- displayed above the left corner of ADI.
- indicates source of displayed deviation for each scale.
- Possible annunciation combinations include:
  - LOC/VNAV - (Localizer with VNAV Deviation)
  - LNAV/G/S - (LNAV Deviation with Glideslope)
  - LNAV/VNAV - (LNAV and VNAV Deviations)
  - FAC/VNAV - (Final Approach Course and VNAV)
  - LNAV/G/P - (LNAV and Glide Path)

2 LNAV/VNAV Deviation Scale

- LNAV deviation scale represents current FMC lateral RNP.
- VNAV deviation scale represents default RNP values.
- displayed if an approach mode is not engaged and either LNAV or any VNAV mode is engaged.

3 Actual Navigation Performance (ANP) Bars

- lateral/vertical indication of available flight technical error remaining based on total system error.
- lateral ANP bars can be displayed in all phases of flight.
- vertical ANP bars can be displayed only after reaching top-of-descent.
- originate from outer scale and expand inward as a function of increasing ANP relative to RNP.

Copyright © The Boeing Company. See title page for details.

- will just touch at center of scale when ANP equals RNP.
- turn from white to amber if current lateral deviation is within ANP bar limits for 10 continuous seconds.

4 LNAV/VNAV Pointer

- a filled magenta symbol when it is not parked at deflection limit.
- an unfilled pointer outline when at deflection limit
- indicates lateral/vertical paths relative to the airplane

5 Anticipation Cues

- displayed if valid approach course deviation information is being received while corresponding LNAV/VNAV deviation scale and pointer are displayed.
- an unfilled white diamond symbol.
- if engaged lateral mode subsequently transitions to LOC, LNAV deviation indications will be removed, and normal ILS localizer indications will be displayed.
- if engaged vertical mode subsequently transitions to G/S, VNAV deviation indications will be removed, and normal ILS G/S indications will be displayed.

Copyright © The Boeing Company. See title page for details.

Attitude Indicator – Instrument Landing System Indications

[Option - Split axis command bars, round dial, radio altitude below, rising runway, radio altitude height alert]

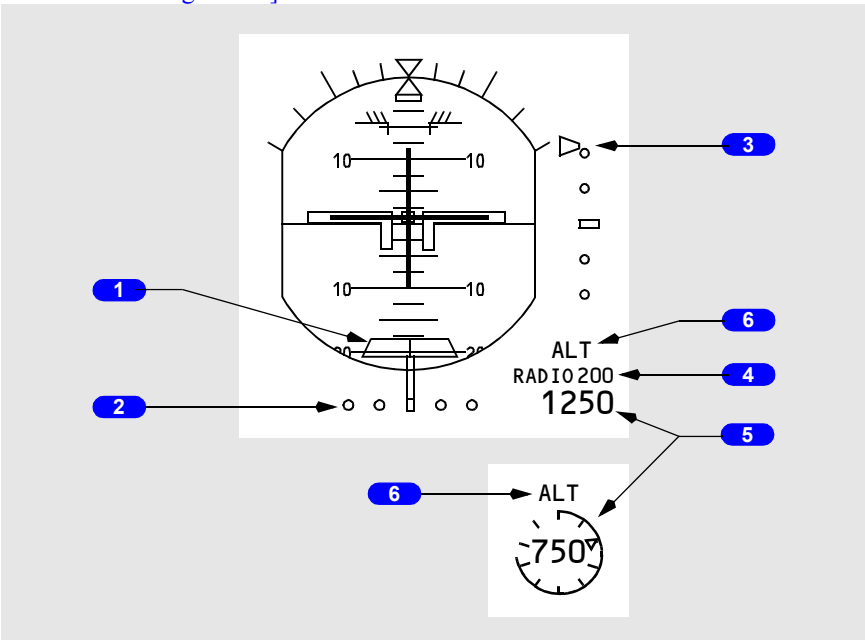

1 Rising Runway (green)

[Option - Rising runway]

- displayed when localizer pointer is in view and radio altitude is less than 2500 feet
- rises towards airplane symbol when radio altitude is below 200 feet
- is not displayed when the localizer signal is unusable.

2 Localizer Pointer and Deviation Scale

The pointer:

- indicates localizer position relative to the airplane
- in view when the localizer signal is received.

The scale:

- indicates deviation
- expands when the localizer is engaged and deviation is slightly more than one–half dot

[Option - Localizer/Glideslope fail flags displayed]

- in view when the localizer signal is received.

Copyright © The Boeing Company. See title page for details.

At low radio altitudes, with autopilot engaged, the scale turns amber and the pointer flashes to indicate excessive localizer deviation.

Each pilot's deviation alerting system self-tests upon becoming armed at 1500 feet radio altitude. This self-test generates a two second LOC deviation alerting display on each attitude indicator.

3 Glide Slope Pointer and Deviation Scale

The pointer:

- indicates glide slope position
- in view when the glide slope signal is received
- the pointer is not displayed when the track and the front course on the mode control panel differ by more than 90 degrees (backcourse).

The scale:

- indicates deviation

[Option - Localizer/Glideslope fail flags displayed]

- in view when the localizer signal is received.

At low radio altitudes, with autopilot engaged, the scale turns amber and the pointer flashes to indicate excessive glide slope deviation.

Each pilot's deviation alerting system self-tests upon becoming armed at 1500 feet radio altitude. This self-test generates a two second G/S deviation alerting display on each attitude indicator.

4 Selected Radio Altitude Approach Minimums (green)

- displays selected minimums as set on the EFIS control panel
- blank when an altitude less than 0 feet is selected
- "RADIO" legend and readout turn amber and flash for 3 seconds when descending through the selected minimum altitude; the legend and readout become steady amber after 3 seconds
- changes back to green:
  - when passing the selected minimum altitude plus 75 feet during go–around
  - at touchdown
  - after pressing the RST switch on the EFIS control panel.

5 Radio Altitude (display –white, selected radio altitude pointer–green) [Option - Round dial]

- displayed below 2500 feet AGL
- blanked above 2500 feet AGL
- digital display from 2500 to 1000 feet AGL
- round dial display below 1000 feet AGL:

Copyright © The Boeing Company. See title page for details.

- pointer replaces digital display of selected radio minimum altitude
- the circumference of the dial is added to, or taken away from, to depict the airplane's radio altitude

- dial and readout turn amber and dial flashes for 3 seconds when descending through the selected minimum altitude; the dial becomes steady amber after 3 seconds
- changes back to white:
  - when passing through the selected minimum altitude plus 75 feet during go–around
  - at touchdown
  - after pressing the RST switch on the EFIS control panel.

6 Radio Altitude Height Alert (white)
[Option - 2500 ft height alert]

Displayed when radio altitude is less than or equal to 2500 feet. Blanked when descent continues below 500 feet AGL, or after pressing the RST switch on the EFIS control panel.

Expanded Localizer Indications

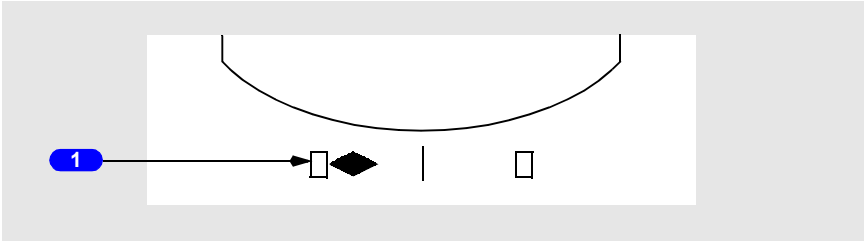

1 Expanded Localizer Scale

[Option - Autopilot or flight director activated]
Displayed when the autopilot or flight director is in LOC mode, deviation is slightly more than one half dot and track is within 5 degrees of the MCP selected course.

Reverts to standard scale when out of LOC mode, and groundspeed is less than 30 knots or radio altitude is greater than 200 feet.

A rectangle equals 1/2 dot deviation.

Copyright © The Boeing Company. See title page for details.

Attitude Indicator Failure Flags

Flags replace the attitude displays to indicate source system failure or lack of computed information.

[Option - Split axis command bars, radio altitude below, flight path vector]

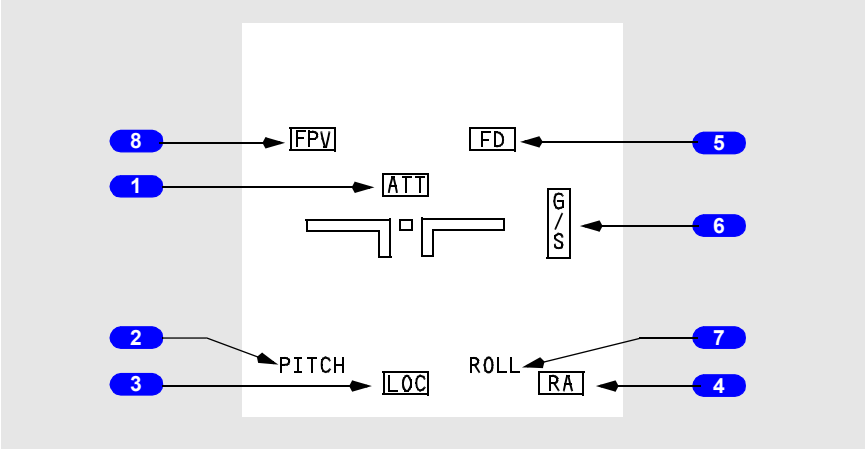

1 Attitude Flag (amber)

The attitude display has failed.

2 Pitch Flag (amber)

The Captain and First Officer pitch angle displays differ by more than 5 degrees.

[Option - Attitude comparator flashing]
The flag flashes for 10 seconds then remains steady.

3 Localizer Flag (amber)

An ILS frequency is tuned and the ILS localizer deviation display on the attitude indicator has failed.

4 Radio Altitude Flag (amber)

The radio altitude display has failed.

5 Flight Director Flag (amber)

The flight director has failed.

6 Glide Slope Flag (amber)

An ILS frequency is tuned and the ILS glide slope deviation display on the attitude indicator has failed.

Copyright © The Boeing Company. See title page for details.

7 Roll Flag (amber)

The Captain and First Officer roll displays differ by more than 5 degrees.

[Option - Attitude comparator flashing]
The flag flashes for 10 seconds then remains steady.

8 Flight Path Vector Flag (amber)
[Option - Flight path vector]

FPV is selected on the EFIS control panel, but has failed. De-selection of FPV removes the flag.

Traffic Alert and Collision Avoidance Indications

[Option - Split axis command bars]

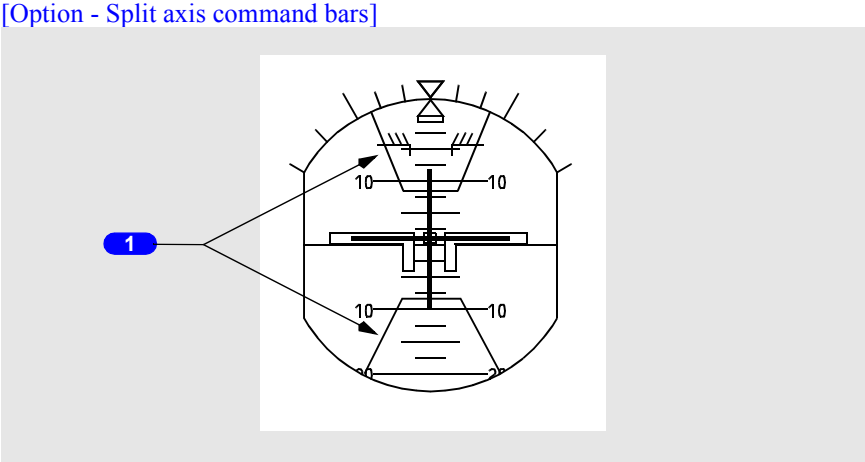

1 Traffic Alert and Collision Avoidance System Pitch Command (red)

The area(s) inside the red lines indicate(s) the pitch region(s) to avoid in order to resolve the traffic conflict. The airplane symbol must be outside the TCAS pitch command area(s) to ensure traffic avoidance. Refer to Chapter 15, Warning Systems.

Copyright © The Boeing Company. See title page for details.

GPWS Annunciations

[Option - Split axis command bars]

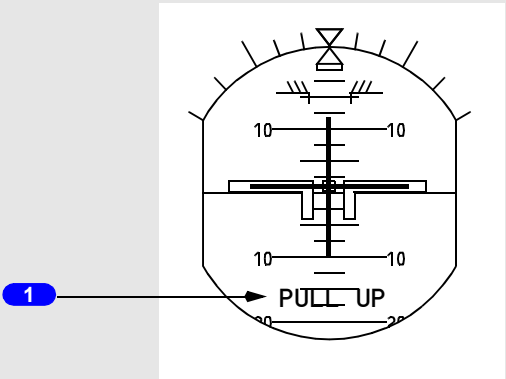

1 GPWS Annunciations (red)

Refer to Chapter 15, Warning Systems.

EFIS – Altimeter

Altimeter – General

The altimeter displays ADIRS altitude and other altitude related information.

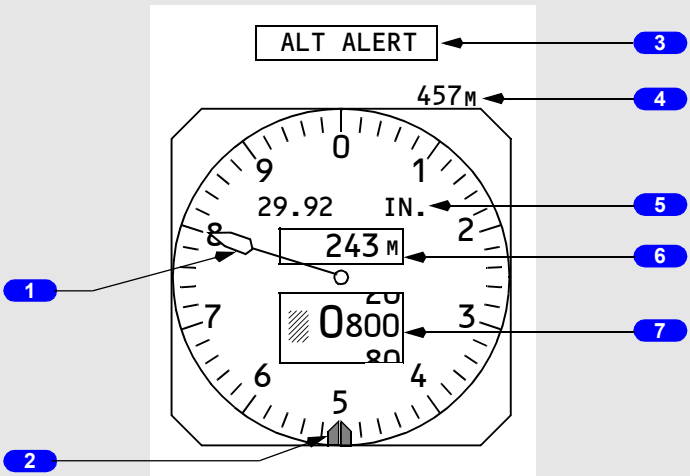

Copyright © The Boeing Company. See title page for details.

1 Altitude Pointer

Makes one revolution each one thousand feet.

2 Reference Altitude Marker (green)

Indicates the barometric minimums as set by the minimums selector on the EFIS control panel.

The minimums reference selector must be in the BARO position to adjust the reference altitude marker.

3 Altitude Alert Annunciation (amber)

- appears steady for altitude acquisition
- flashes during altitude deviation
- refer to Chapter 15, Warning Systems.

4 Metric Selected Altitude Readout (readout–magenta, caption–cyan)

Displays MCP altitude in meters when MTRS is selected on the EFIS control panel. Not available in compact mode.

5 Barometric Setting (green)

Indicates the barometric setting in either inches of mercury (IN) or hectopascals (HPA) as selected on the EFIS control panel.

6 Metric Digital Readout (readout–white, caption–cyan)

Displays current altitude in meters when MTRS is selected on the EFIS control panel. Not available in compact mode.

7 Digital Readout (white)

Displays current altitude in increments of thousands, hundreds and twenty feet:

- for positive values of altitude below 10,000 feet, a green crosshatch symbol is displayed
- a negative sign appears when altitude below zero feet is displayed.

Copyright © The Boeing Company. See title page for details.

Altimeter – Altitude Disagree Alert

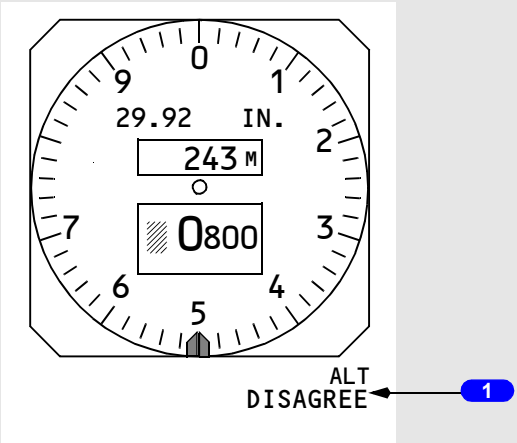

1 Altitude Disagree Alert (amber)

Indicates the Captain's and F/O's altitude indications disagree by more than 200 feet for more than 5 continuous seconds.

Altimeter Failure Flag

The failure flag replaces the altitude displays to indicate system failure.

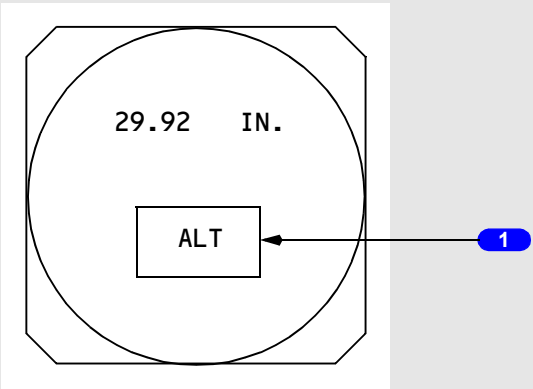

Copyright © The Boeing Company. See title page for details.

1 Altitude Failure Flag (amber)

The barometric altitude or barometric correction has failed:

- all altimeter symbols are removed except the ALT ALERT annunciation and the barometric setting.

EFIS – Vertical Speed Indicator

Vertical Speed Indicator – General

The vertical speed indicator displays ADIRS instantaneous vertical speed.

[Option - TCAS advisory]

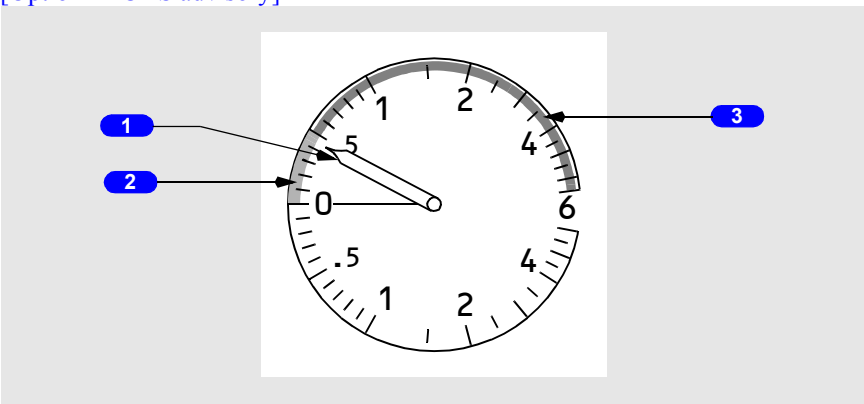

1 Vertical Speed Pointer (white)

Depicts rate of climb or descent from 0 to 6000 feet per minute.

2 TCAS Corrective Advisory (green)
[Option - TCAS advisory]

Indicates range of recommended vertical speed.

3 TCAS Preventative Advisory (red)
[Option - TCAS advisory]

Indicates range of vertical speed to be avoided.

Copyright © The Boeing Company. See title page for details.

Vertical Speed Indicator Failure Flag

[Option - VSI TCAS advisory]

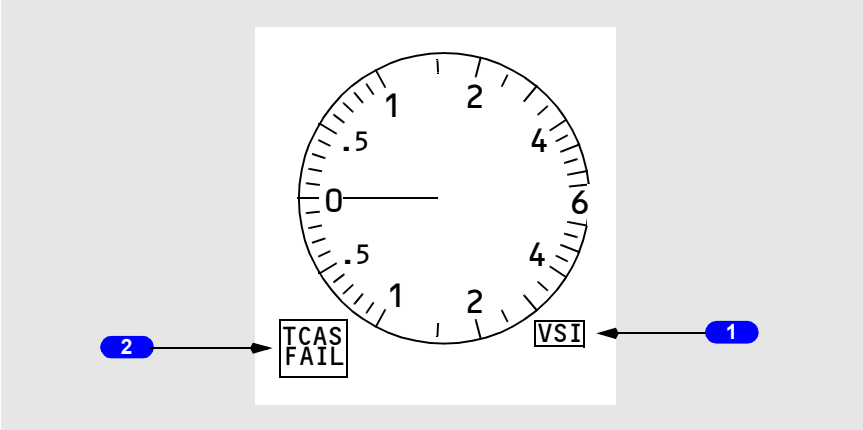

1 VSI Failure Flag (amber)

Vertical speed has failed. The pointer is also removed.

2 TCAS Failure Flag (amber)
[Option - VSI TCAS advisory]

TCAS advisory function has failed. Compact format only.

EFIS – Marker Beacon Indications

Marker Beacons Indications

The marker beacon indication flashes when over one of the marker beacon transmitters.

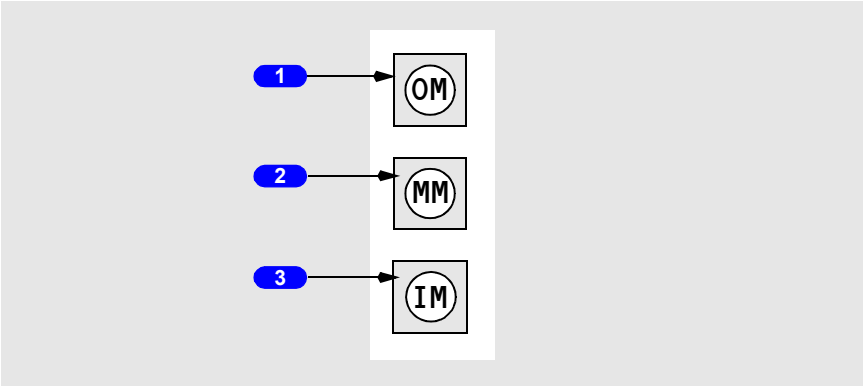

Copyright © The Boeing Company. See title page for details.

1 Outer Marker (cyan)

Flashes when over an outer marker beacon.

2 Middle Marker (amber)

Flashes when over a middle marker beacon.

3 Inner Marker (white)

Flashes when over an airway or inner marker beacon.

Navigation Displays – Horizontal Situation Indicator (HSI)

Horizontal Situation Indicator – General

The HSI displays current ADIRS heading, track and other information.

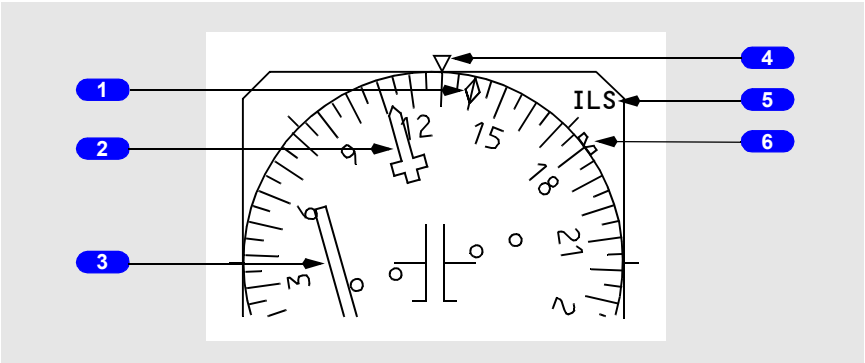

1 Drift Angle Pointer (white)

Indicates current drift angle or track.

2 Selected Course Pointer (white)

Indicates the course set on the mode control panel. Set by the related mode control panel course selector.

3 Course Deviation Indicator (magenta)

Indicates deviation from the selected localizer or VOR course.

4 Heading Pointer (white)

Indicates current heading.

Copyright © The Boeing Company. See title page for details.

5 Lateral Deviation Source Annunciation (green)

Identifies the selected navigation source as VOR or ILS.

6 Selected Heading Bug (magenta)

Indicates the heading selected on the mode control panel. If the selected heading exceeds the display range, the bug parks on the side of the compass rose in the direction of the shorter turn to the heading.

Horizontal Situation Indicator – Compact Display

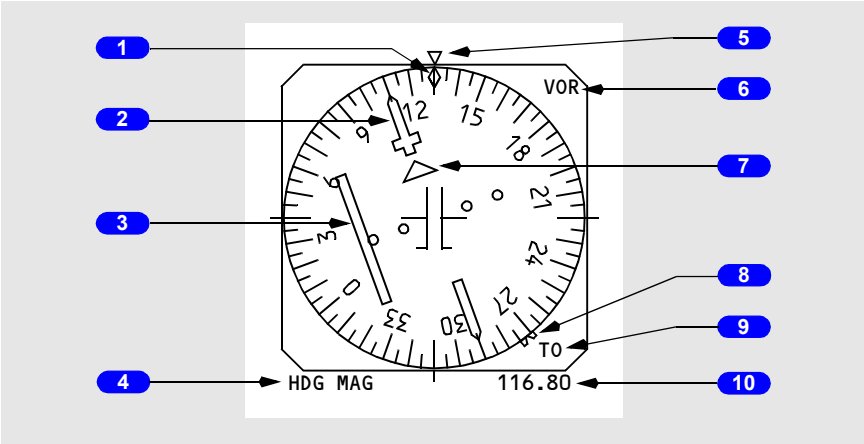

1 Drift Angle Pointer (white)

Indicates current drift angle or track.

2 Selected Course Pointer (white)

Indicates the course set on the mode control panel. Set by the related mode control panel course selector.

3 Course Deviation Indicator (magenta)

Indicates deviation from the selected localizer or VOR course.

4 Magnetic/True Heading Annunciation (green)

Indicates the HSI reference:

- HDG MAG (green) indicates display is oriented relative to magnetic north
- TRU HDG (green) indicates display is oriented relative to true north; a white box is displayed continuously around TRU HDG

Copyright © The Boeing Company. See title page for details.

- transition from TRU HDG to HDG MAG results in a green box around HDG MAG for 10 seconds
- when TRU HDG is displayed and the airplane descends more than 2000 feet at a descent rate greater than –800 feet per minute, an amber box is drawn around TRU HDG; the box flashes for 10 seconds, then turns steady amber.

5 Heading Pointer (white)

Indicates current heading.

6 Lateral Deviation Source Annunciation (green)

Identifies the selected navigation source as VOR or ILS.

7 TO/FROM Pointer (white)

8 Selected Heading Bug (magenta)

Indicates the heading selected on the mode control panel.

9 TO/FROM Annunciation (white)

10 Frequency Display (green)

Indicates selected navigation radio frequency.

Horizontal Situation Indicator Failure Flags

The flags replace the horizontal situation indicator displays to indicate source system failure or lack of computed data.

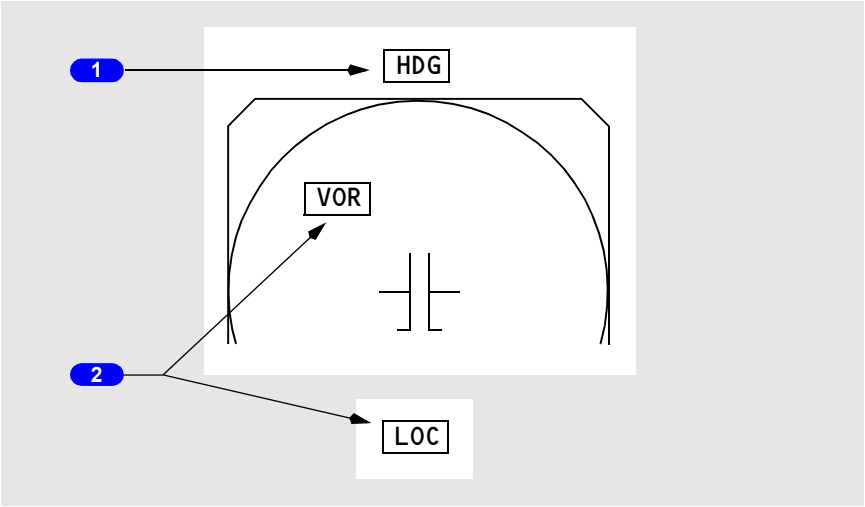

Copyright © The Boeing Company. See title page for details.

1 Heading Failure Flag (amber)

The heading source has failed. The compass rose is removed.

2 VOR/LOC Failure Flag (amber)

The airplane navigation data source has failed.

Navigation Displays – Radio Distance Magnetic Indicator (RDMI)

Radio Distance Magnetic Indicator – General

The RDMI provides the same information as a conventional RDMI.

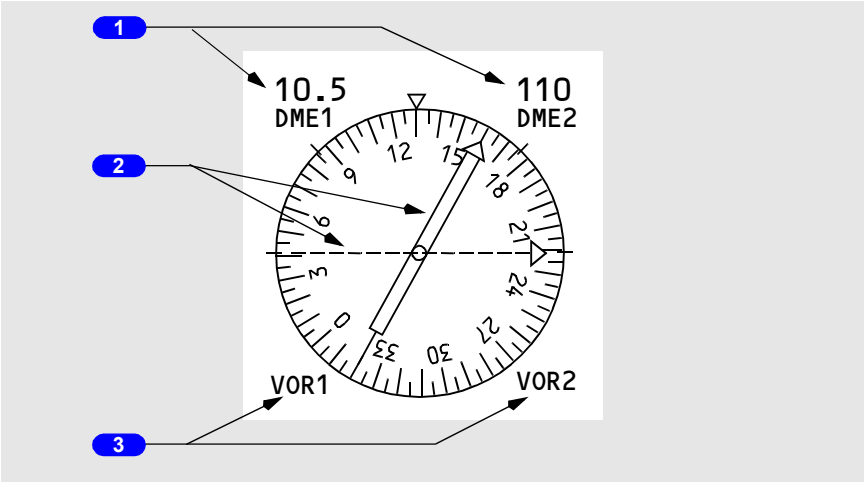

1 DME Indications (white)

Displayed if DME information is available from the navigation aid tuned in the VHF navigation control panel.

2 Bearing Pointers (VOR source–green, ADF source–cyan)

- narrow pointer uses signals from the VHF NAV receiver No. 1 or ADF receiver No. 1

[Option - 2 ADF receivers]

- wide pointer uses signals from the VHF NAV receiver No. 2 or ADF receiver No. 2.

Copyright © The Boeing Company. See title page for details.

3 Bearing Source Indications (VOR source–green, ADF source–cyan)

- indicates “OFF” (white) if related VOR/ADF switch on the EFIS control panel is in the OFF position

[Option - 2 ADF receivers]

- bearing source indicator No. 2 displays “INOP” (white) if the No. 2 VOR/ADF switch is in the ADF position and the No. 2 ADF receiver is not installed.

Radio Distance Magnetic Indicator Failure Flags

The flags replace the RDMI displays to indicate source system failure.

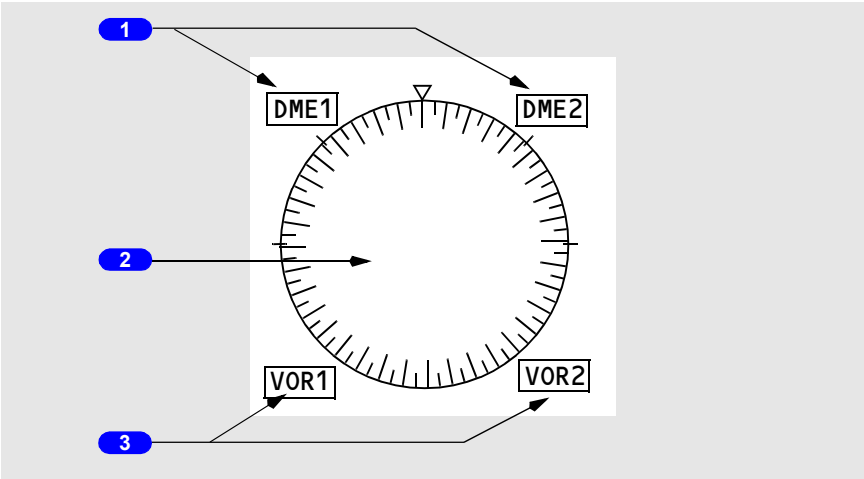

1 DME Failure Flags (amber)

The DME system has failed.

2 Heading Failure

The heading display is removed if heading information has failed.

3 VOR, ADF Failure Flags (amber)

The selected VOR or ADF information is invalid.

Copyright © The Boeing Company. See title page for details.

Navigation Displays – MAP Mode

Note: Refer to section 40 of this chapter for a detailed explanation of the navigation symbology shown on the following pages.

Expanded MAP Mode

[Option - Heading-up display, weather radar range marks, single FMC]

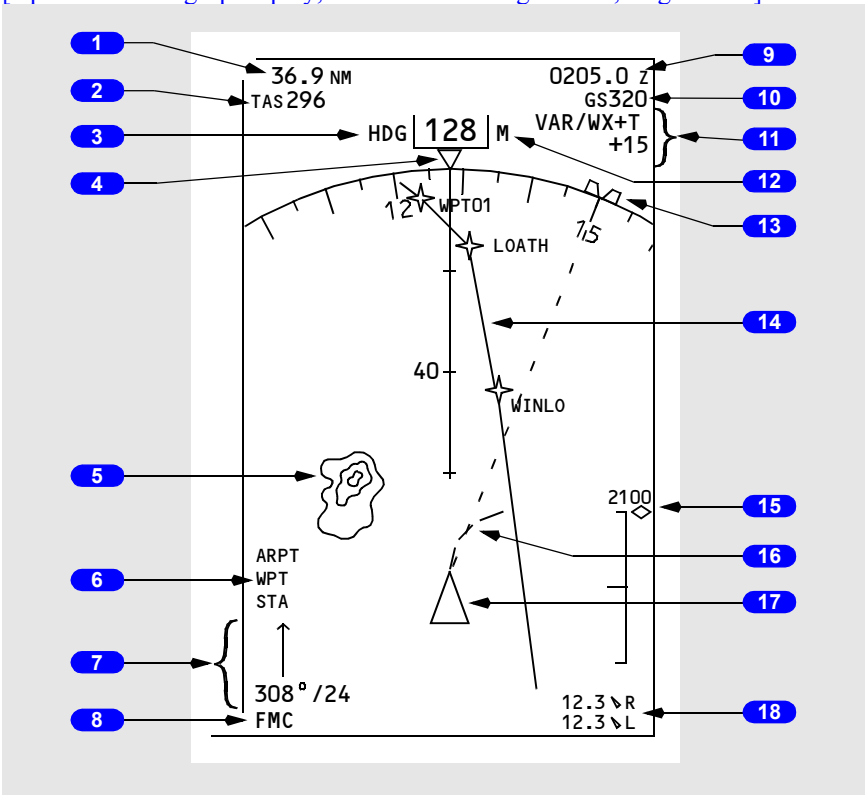

1 **Distance to Next Active Waypoint**

2 **True Airspeed**

3 **Current Heading**
[Option - Heading-up display]

4 **Heading Pointer**

5 **Weather Radar Returns**

Copyright © The Boeing Company. See title page for details.

6 MAP Options

7 Wind Direction and Speed

8 MAP Source Annunciation

9 Estimated Time of Arrival at Next Active Waypoint

10 Groundspeed

11 Weather Radar Annunciations

12 Magnetic/True Reference

13 Selected Heading Bug

14 Active LNAV Route

15 Vertical Deviation Scale and Pointer

16 Position Trend Vector

17 Airplane Symbol

18 Position Difference Display

Copyright © The Boeing Company. See title page for details.

Center MAP Mode

[Option - Heading-up display, full-time ADF, 2 ADF receivers, single FMC]

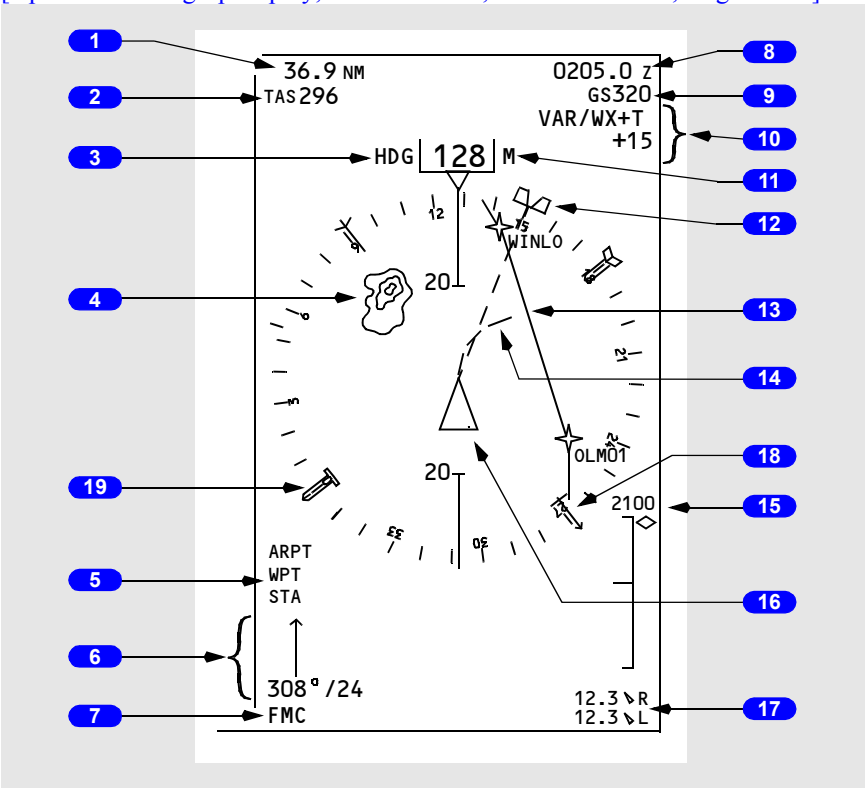

1 Distance to Next Active Waypoint

2 True Airspeed

3 Current Heading
[Option - Heading-up display]

4 Weather Radar Returns

5 MAP Options

6 Wind Direction and Speed

7 MAP Source Annunciation

Copyright © The Boeing Company. See title page for details.

8 **Estimated Time of Arrival at Next Active Waypoint**

9 **Groundspeed**

10 **Weather Radar Annunciations**

11 **Magnetic/True Reference**

12 **Selected Heading Bug**

13 **Active Route**

14 **Position Trend Vector**

15 **Vertical Deviation Scale and Pointer**

16 **Airplane Symbol**

17 **Position Difference Display**

18 **ADF1 Bearing Pointer**
[Option - Full-time ADF]

19 **ADF2 Bearing Pointer**
[Option - Full-time ADF, 2 ADF receivers]

Copyright © The Boeing Company. See title page for details.

Navigation Displays – Approach Mode

Expanded Approach Mode

[Option - Weather radar range marks]

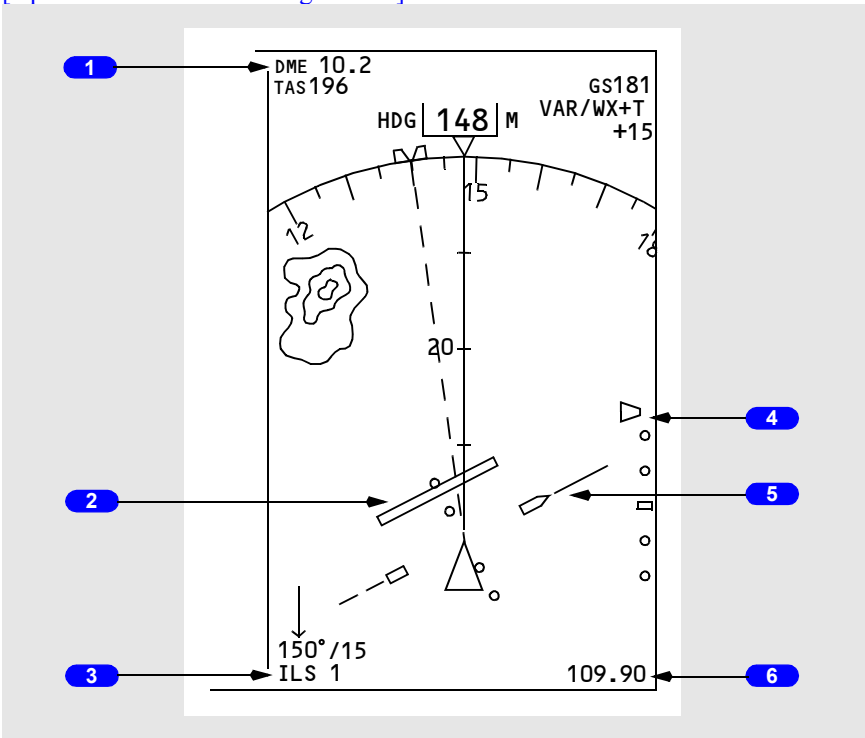

1 **Reference ILS DME**

2 **Localizer Deviation Indication and Scale**

3 **Reference ILS Receiver**

4 **Glide Slope Pointer and Scale**

5 **Selected Course Pointer**

6 **Reference ILS Frequency**

Copyright © The Boeing Company. See title page for details.

Center Approach Mode

[Option - Dual ADF]

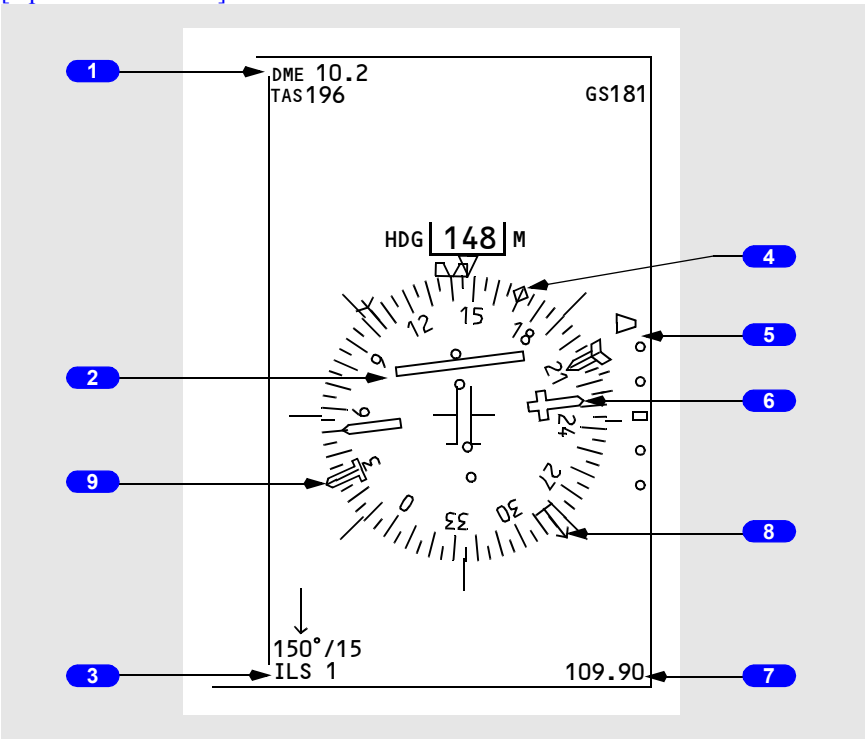

1 **Reference ILS DME**

2 **Localizer Deviation Indication and Scale**

3 **Reference ILS Receiver**

4 **Drift Angle Pointer**

5 **Glide Slope Pointer and Scale**

6 **Selected Course Pointer**

Copyright © The Boeing Company. See title page for details.

7 **Reference ILS Frequency**

8 **ADF1 Bearing Pointer**

9 **ADF2 Bearing Pointer**
[Option - Dual ADF]

Copyright © The Boeing Company. See title page for details.

Navigation Displays – VOR Mode

Expanded VOR Mode

[Option - Weather radar range marks]

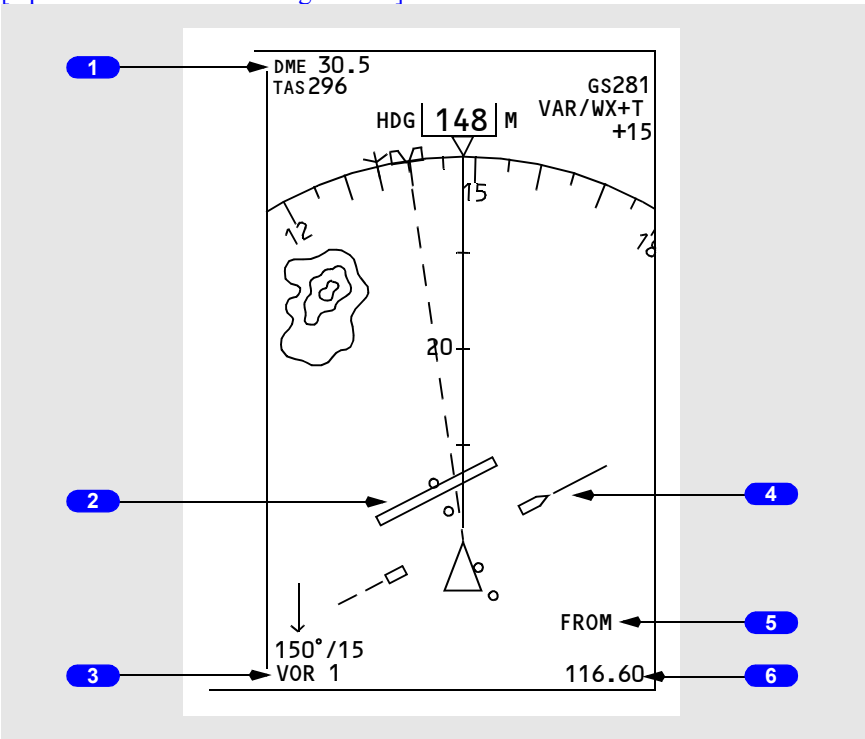

1 Reference VOR DME

2 Lateral Deviation Indication and Scale

3 Reference VOR Receiver

4 Selected Course Pointer

5 TO/FROM Indication

6 Reference VOR Frequency

Copyright © The Boeing Company. See title page for details.

Center VOR Mode

[Option - Dual ADF]

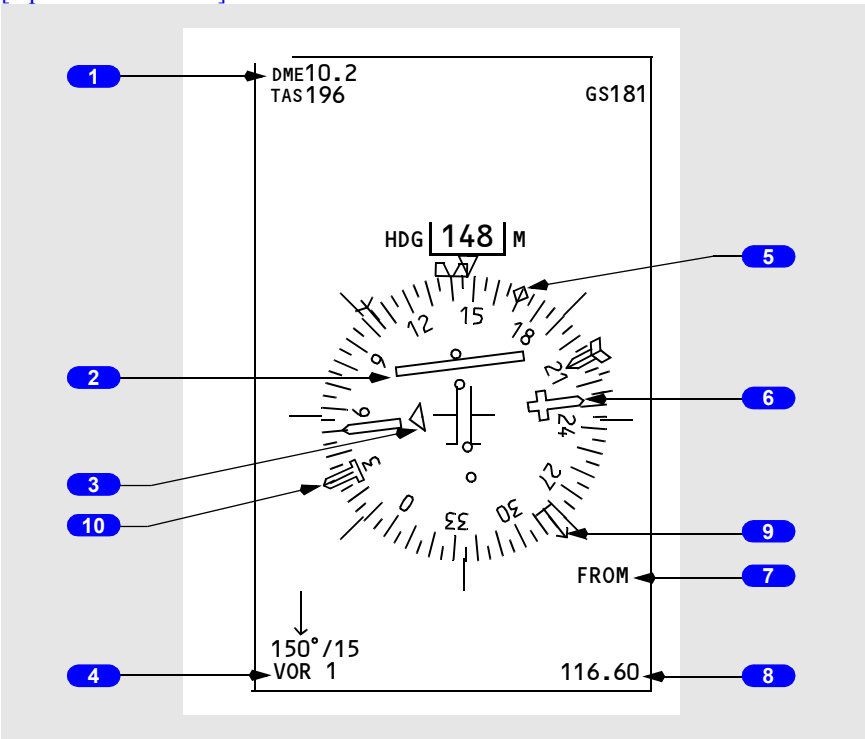

1 Reference VOR DME

2 Lateral Deviation Indication and Scale

3 TO/FROM Pointer

4 Reference VOR Receiver

5 Drift Angle Pointer

6 Selected Course Pointer

7 TO/FROM Indication

Copyright © The Boeing Company. See title page for details.

8 **Reference VOR Frequency**

9 **ADF1 Bearing Pointer**

10 **ADF2 Bearing Pointer**
[Option - Dual ADF]

Navigation Displays – Plan Mode

Plan Mode

[Option - Single FMC]

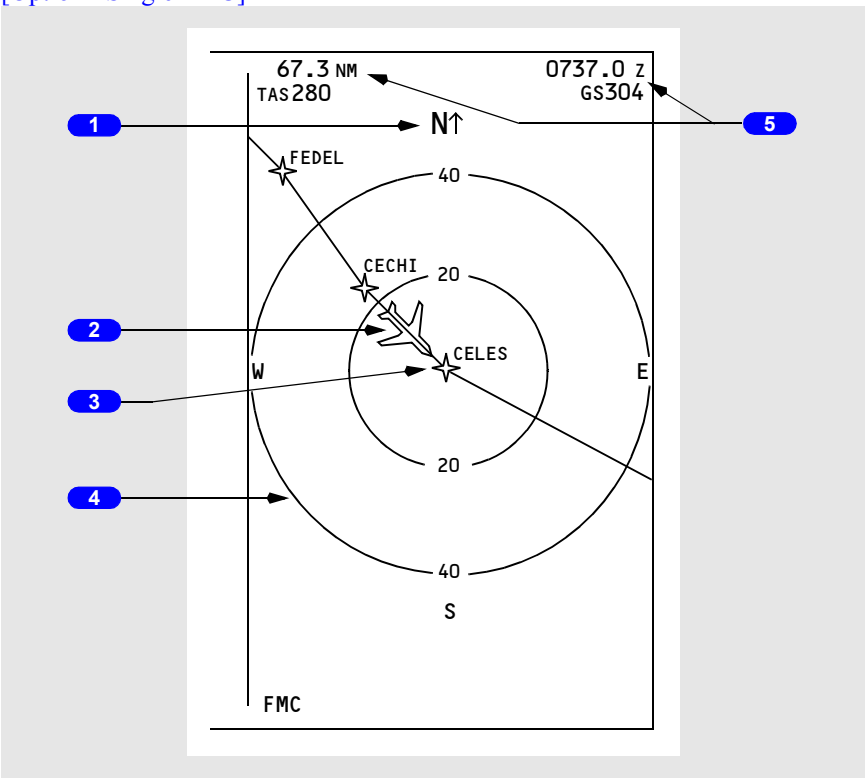

1 **True North Up Arrow**

2 **Airplane Symbol**

Denotes current position and true heading. Symbol does not display north of 82N latitude or south of 82S latitude.

Copyright © The Boeing Company. See title page for details.

3 Center Waypoint

The waypoint located at the display center is identified as CTR on the CDU RTE LEGS page.

4 Range Circle

5 Active Waypoint Information

Navigation Displays – Advisory Messages

Mode/Frequency Disagree Annunciation

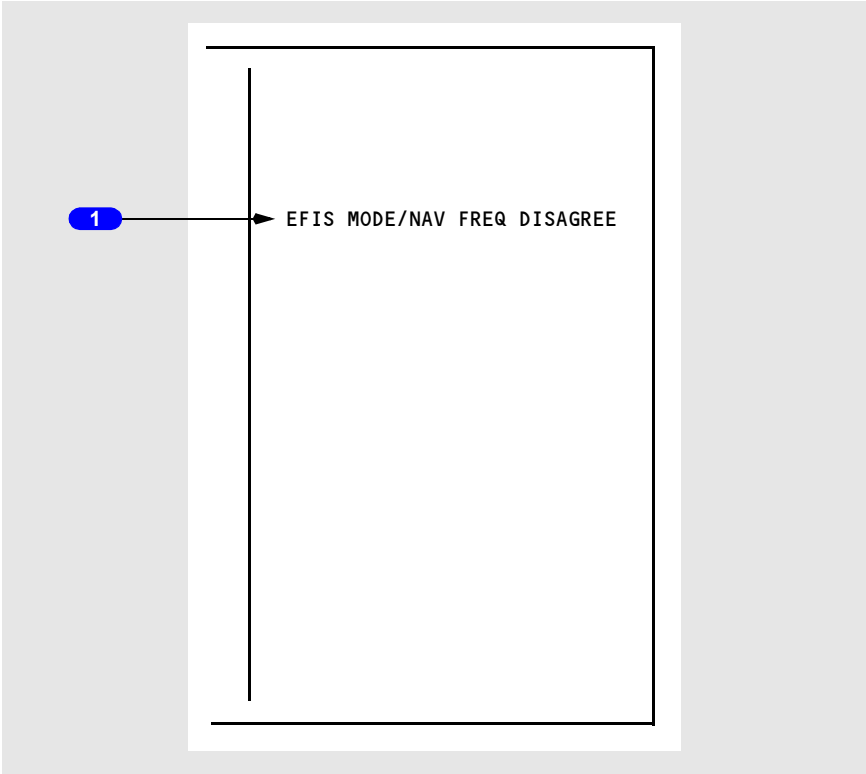

1 Mode/Frequency Disagree Annunciation (amber)

Indicates APP is selected with a VOR frequency tuned, or VOR is selected with an ILS frequency tuned.

- the annunciation only applies to an on–side comparison of the EFIS control panel mode and tuned VOR/ILS frequency
- applicable to expanded and center APP and VOR modes

Copyright © The Boeing Company. See title page for details.

- dashes displayed on DME display and ILS/VOR frequency display
- localizer deviation bar, VOR course deviation bar, and glide slope pointer (for APP mode) are not displayed.

Navigation Advisory Messages

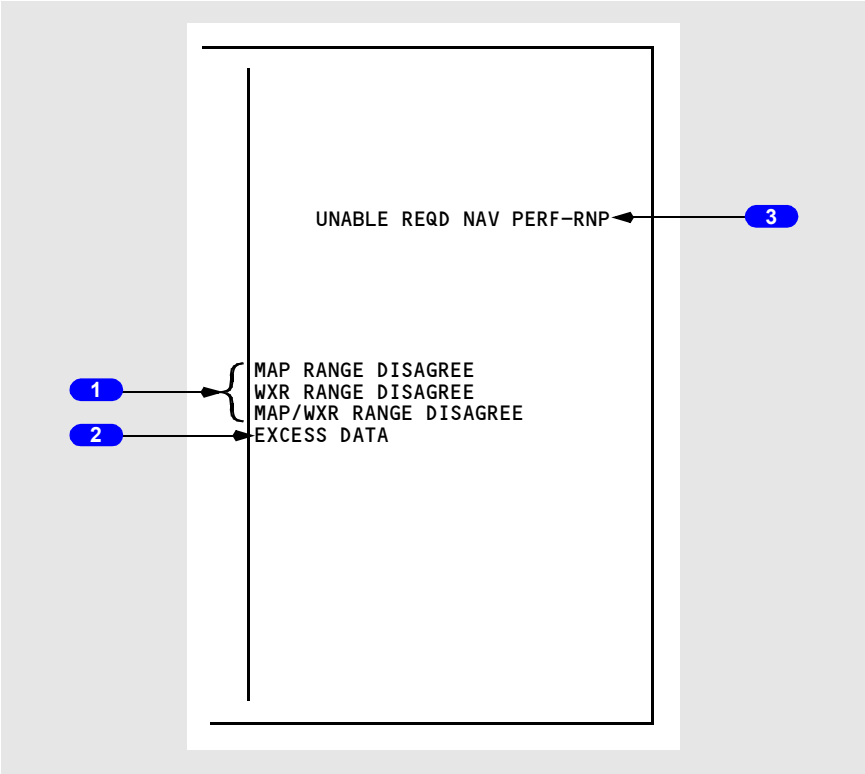

1 Range Disagreement Annunciations (amber)

MAP RANGE DISAGREE – Indicates selected range on the EFIS control panel is different than the MAP display range.

WXR RANGE DISAGREE – Indicates selected range on the EFIS control panel is different than the WXR display range.

MAP/WXR RANGE DISAGREE – Indicates selected range on the EFIS control panel is different than the MAP and WXR display ranges.

2 EXCESS DATA Annunciation (amber)

The amount of data sent to the navigation display exceeds the display capability.

Copyright © The Boeing Company. See title page for details.

3 Nav Advisory Message (amber)

UNABLE REQD NAV PERF–RNP – Displayed in MAP or Center MAP during approach. Refer to Chapter 11 section 60, FMC Messages.

TCAS Messages

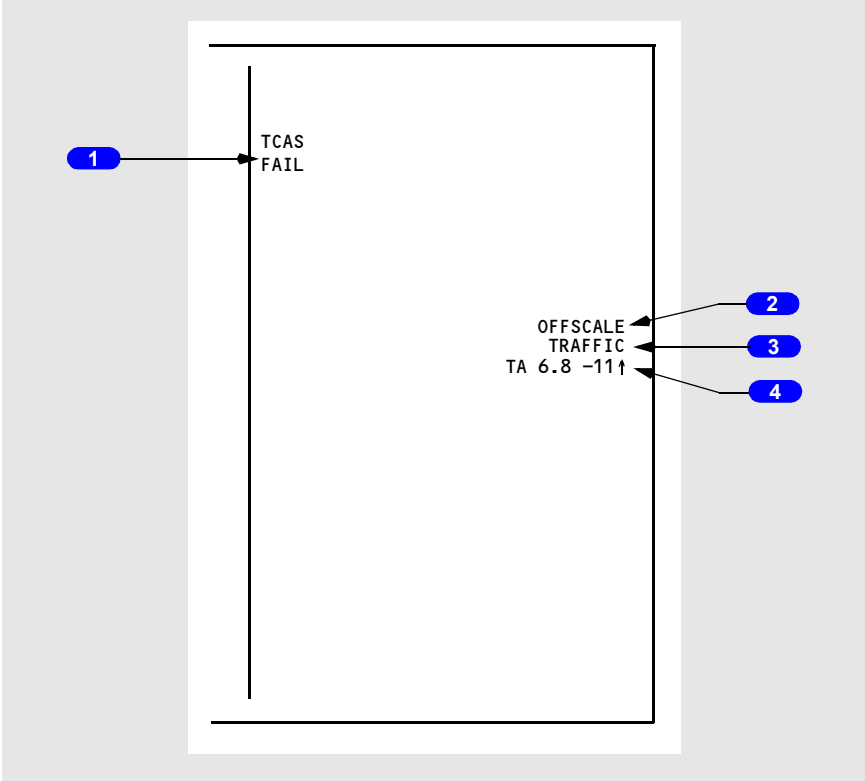

1 TCAS Annunciations

TFC (cyan) – TFC selected on the EFIS control panel in Expanded MAP, Center MAP, Expanded APP or Expanded VOR modes.

TCAS TEST (cyan) – TCAS in test mode.

TCAS FAIL (amber) – TCAS has failed.

TA ONLY (cyan) – TCAS TA only mode.

TCAS OFF (amber) – TCAS off.

2 OFFSCALE (red or amber)

TA (amber) or RA (red) is beyond the display range.

Copyright © The Boeing Company. See title page for details.

3 TRAFFIC (red or amber)

Displayed during a TA (amber) or RA (red) condition.

4 No Bearing Message (red or amber)

Displayed when no bearing information is available for traffic.

Look-Ahead Terrain Messages (GPWS)

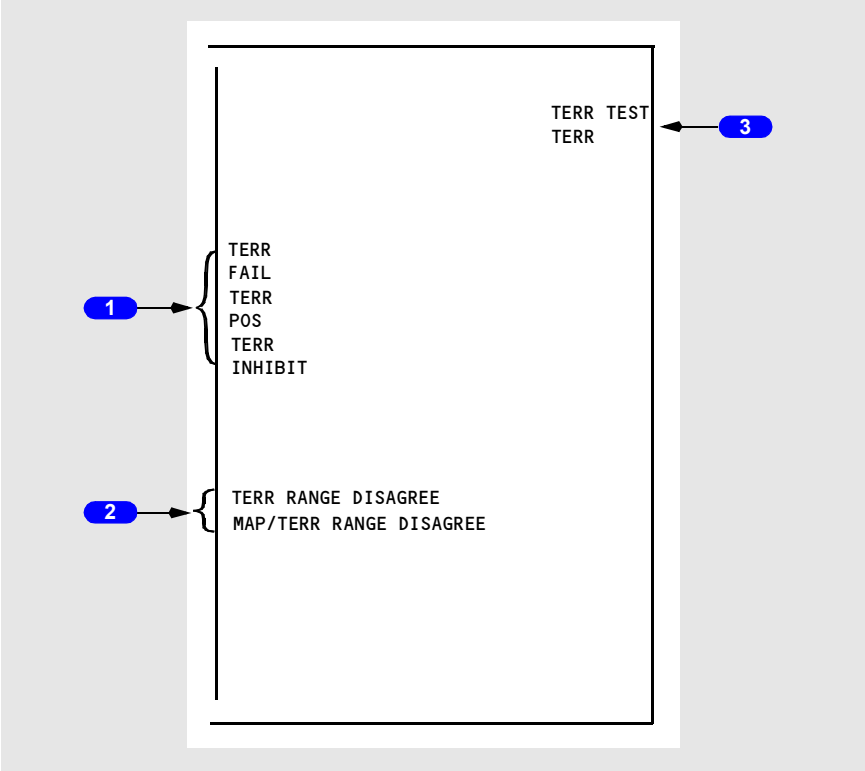

1 Terrain Status Annunciation (amber)

TERR FAIL – Look-ahead terrain alerting and display have failed.

TERR POS – Look-ahead terrain alerting and display unavailable due to position uncertainty.

TERR INHIBIT – GPWS terrain inhibit switch in TERR INHIBIT position.

Copyright © The Boeing Company. See title page for details.

2 Terrain Range Status Annunciation (amber)

TERR RANGE DISAGREE –

- terrain display enabled, and
- terrain output range disagrees with selected EFIS control panel range.

MAP/TERR RANGE DISAGREE –

- terrain display enabled, and
- terrain output range disagrees with selected EFIS control panel range, and
- map display output range disagrees with selected EFIS control panel range.

3 Terrain Mode Annunciation (cyan)

TERR TEST – GPWS is operating in self-test mode.

TERR – Terrain display enabled (manual or automatic display).

Predictive Windshear System (PWS) Message

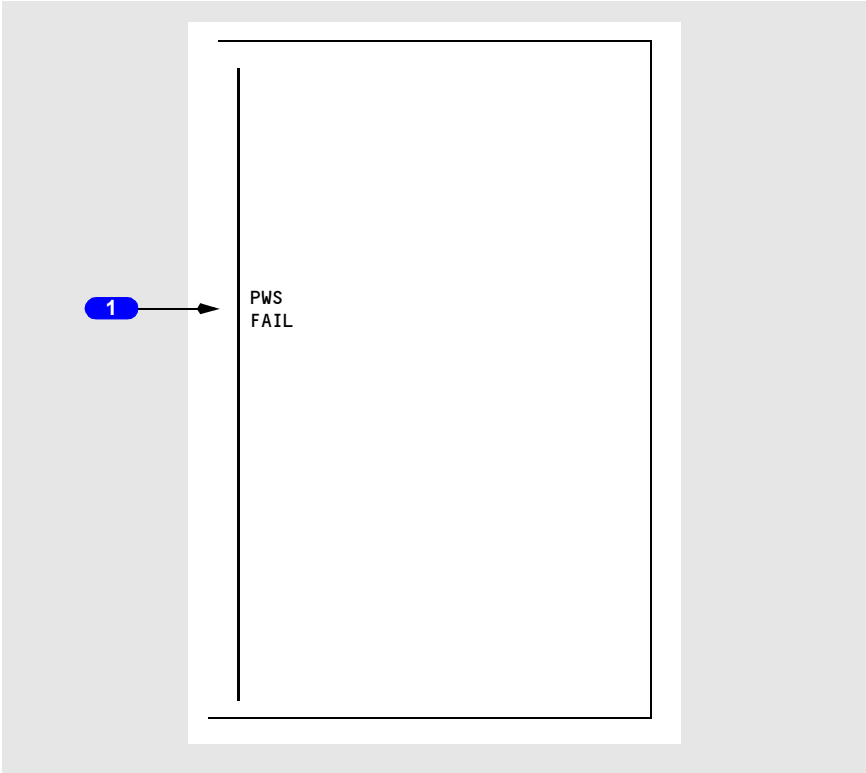

Copyright © The Boeing Company. See title page for details.

1 PWS FAIL Annunciation (amber)

Predictive windshear alerting and display have failed.

Navigation Displays – Failure Indications and Flags

Dashes replace numbers if there is no computed information. Failure flags replace symbols or failure messages are displayed, as appropriate.

Failure Flags – Expanded MAP, Center MAP, Expanded APP, Expanded VOR Modes

[Option - Heading-up display, dual ADF]

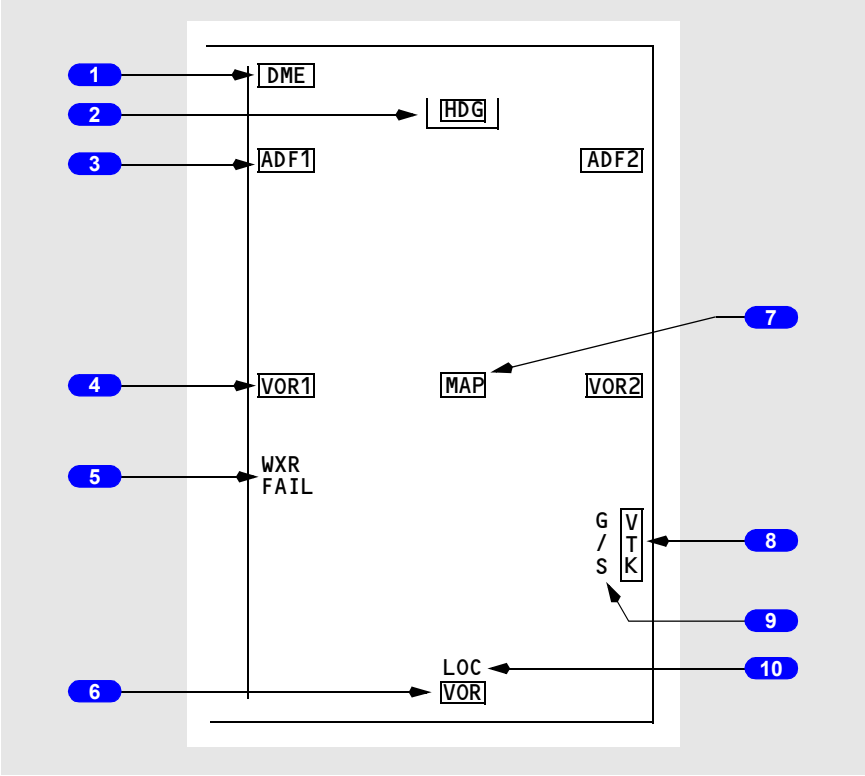

1 DME Failure Flag (APP and VOR modes)

DME display has failed.

Copyright © The Boeing Company. See title page for details.

2 Heading Failure Flag (MAP, APP and VOR modes)
[Option - Heading-up display]

Heading display has failed.

3 ADF Failure Flag (MAP, APP and VOR modes)
[Option - Full time ADF in MAP mode]

ADF display has failed.

4 VOR Failure Flag (MAP modes)

EFIS control panel POS switch selected and VOR display failed.

5 Weather Radar Annunciations (MAP, APP and VOR modes)

WXR FAIL – Weather radar has failed. No weather data are displayed.

WXR WEAK – Weather radar calibration fault.

WXR ATT – Attitude stabilization for antenna has been lost.

WXR STAB – Antenna stabilization is off.

WXR DSP – Display unit cooling has been lost or an overheat condition has occurred. Weather radar display is blanked.

6 VOR Failure Flag (VOR modes)

VOR display has failed.

7 MAP Failure Flag (MAP modes)

The related FMC generated map display has failed.

8 Vertical Track Failure Flag (MAP modes)

FMC vertical track data are invalid.

9 ILS Glide Slope Failure Flag (APP modes)

ILS glide slope display has failed.

10 ILS Localizer Failure Flag (APP modes)

ILS localizer display has failed.

Copyright © The Boeing Company. See title page for details.

Failure Flags – Center APP and Center VOR Modes

[Option - Dual ADF]

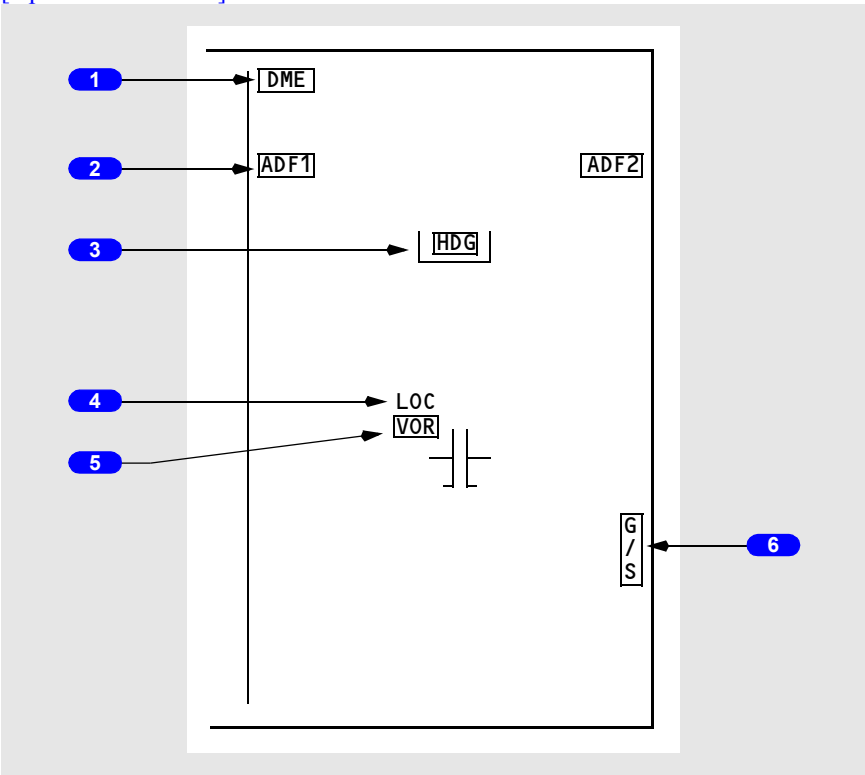

1 DME Failure Flag (APP and VOR modes)

DME display has failed.

2 ADF Failure Flag (APP and VOR modes)

ADF display has failed.

3 Heading Failure Flag (APP and VOR modes)

Heading display has failed.

4 ILS Localizer Failure Flag (APP modes)

ILS localizer display has failed.

5 VOR Failure Flag (VOR modes)

VOR display has failed.

Copyright © The Boeing Company. See title page for details.

6 ILS Glide Slope Failure Flag (APP modes)

ILS glide slope display has failed.

Additional Flags and Annunciations

Displays Control Panel Annunciation

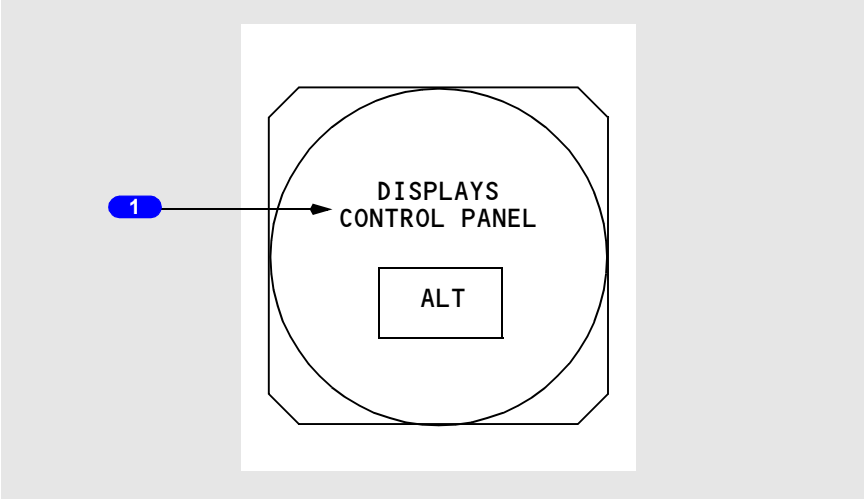

1 Displays Control Panel Annunciation (amber)

With the CONTROL PANEL select switch on the overhead panel in:

- BOTH ON 1 - left (Capt) EFIS control panel has failed
- NORMAL - corresponding EFIS control panel has failed
- BOTH ON 2 - right (F/O) EFIS control panel has failed.

Altitude information is removed.

Copyright © The Boeing Company. See title page for details.

Display System Annunciations

Note: The following annunciations occupy the same display location above the altimeter.

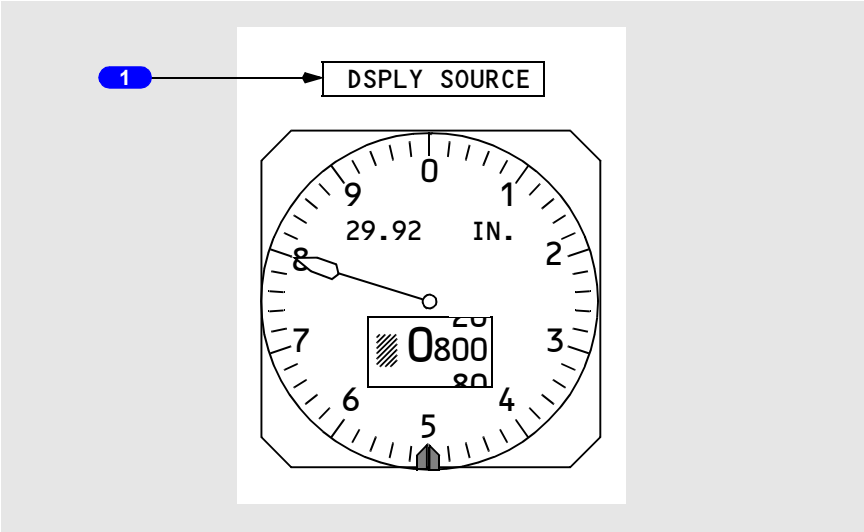

1 Display System Annunciations

DSPLY SOURCE (amber) – A single DEU has been selected, either manually or automatically, to drive all six display units.

- If the DEU fails on the same side as the engaged autopilot during climb or descent –

[Option – Split axis command bars]

  - the flight director pitch command bars are removed from both pilots' displays. The pitch command bars reappear at ALT ACQ
  - the pitch mode reverts to CWS pitch
  - the autopilot remains engaged.
- If the DEU fails on the same side as the engaged autopilot during level flight –
  - climb or descent to a new MCP altitude is not possible in LVL CHG, VNAV, or V/S modes with the autopilot engaged.
- If the DEU fails on the opposite side as the engaged autopilot or while in manual F/D mode during climb or descent –

[Option – Split axis command bars]

  - the flight director pitch command bar is removed from the pilot's display on the failed side until ALT ACQ

Copyright © The Boeing Company. See title page for details.

- climb or descent is possible in LVL CHG, VNAV or V/S modes with the autopilot engaged.
- If the DEU fails on the same side as the engaged autopilot in the APPROACH mode –

[Option – Split axis command bars]

- the flight director pitch and roll command bars are removed from the pilot's display on the failed side.

[Option - With CDS Block 99 software upgrade]
CDS MAINT (white) – A dispatchable CDS fault has occurred. Displayed on the ground only, prior to start of the second engine.

[Option - Without CDS Block 99 software upgrade]
CDS MAINT (white) – A non–dispatchable CDS fault has occurred. Displayed on the ground only, prior to start of the second engine.

CDS FAULT (amber) – A non–dispatchable CDS fault has occurred. Displayed on the ground only, prior to start of the second engine.

Instrument Switch Annunciation

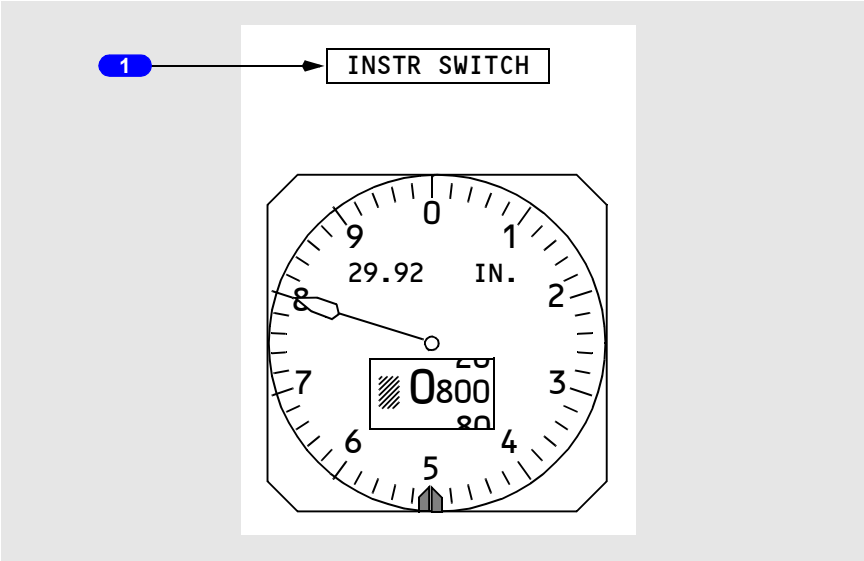

1 INSTR SWITCH Annunciation (amber)

Indicates both the Captain's and First Officer's displays are using the same source of IRU data. Displayed when the IRS switch on the overhead panel is not in the NORMAL position.

Copyright © The Boeing Company. See title page for details.

PFD/ND Display System – Overview

Display Units

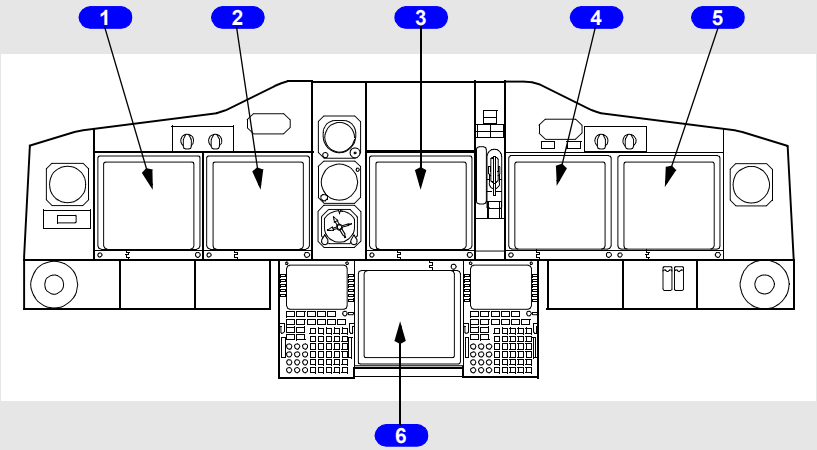

LEFT, CENTER and RIGHT
FORWARD PANEL

1 Captain Outboard Display Unit

2 Captain Inboard Display Unit

3 Upper Display Unit

4 First Officer Inboard Display Unit

5 First Officer Outboard Display Unit

6 Lower Display Unit

Copyright © The Boeing Company. See title page for details.

DO NOT USE FOR FLIGHT

Captain Outboard Display

[Option - Integrated cue command bar]

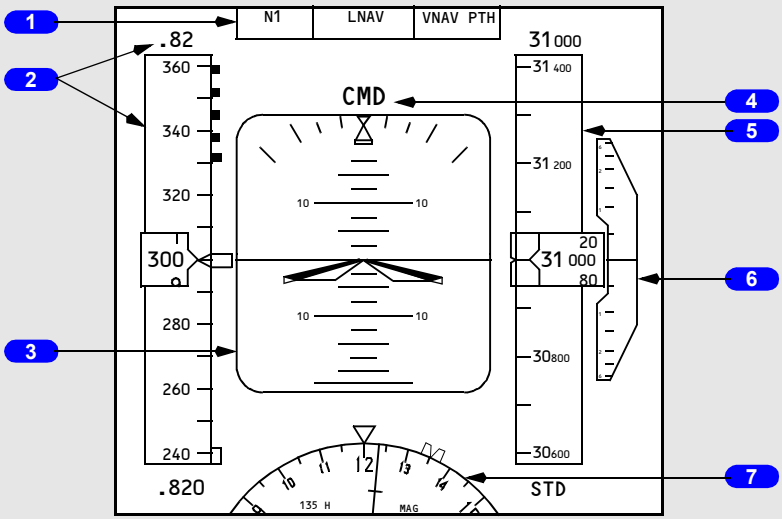

LEFT FORWARD PANEL

1 Flight Mode Annunciator

Refer to Chapter 4, Automatic Flight

2 Airspeed/Mach Indications

3 Attitude Indications

4 Autopilot, Flight Director System Status

5 Altitude Indications

6 Vertical Speed Indications

7 Heading/Track Indications

Copyright © The Boeing Company. See title page for details.

Captain Inboard Display

[Option - Track-up display, dual FMC]

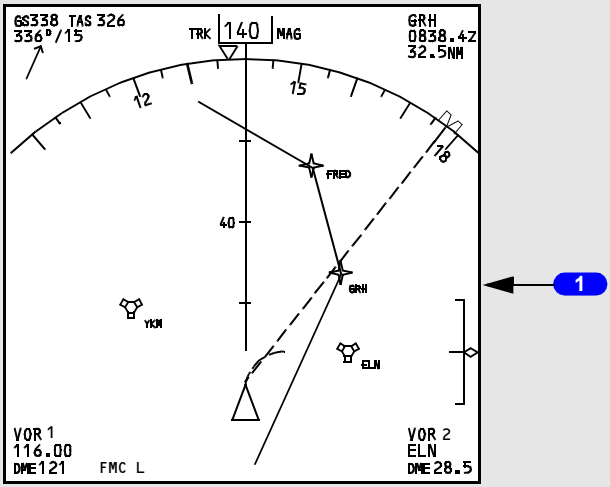

LEFT FORWARD PANEL

1 Navigation Display

Displays map, approach, VOR, or plan modes as selected on the EFIS control panel.

Copyright © The Boeing Company. See title page for details.

DO NOT USE FOR FLIGHT

First Officer Inboard Display

[Option - Track-up display, dual FMC]

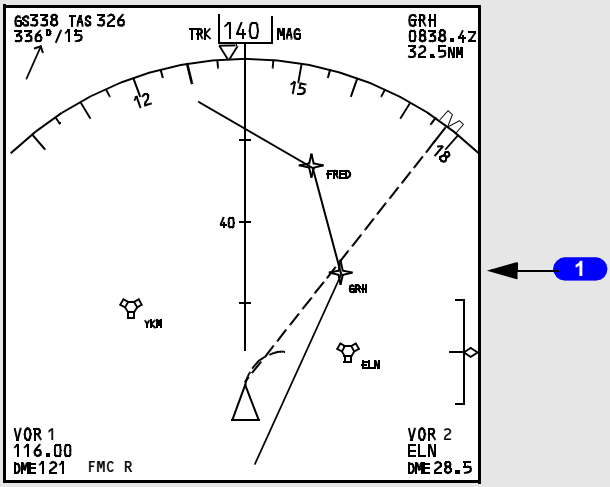

RIGHT FORWARD PANEL

1 Navigation Display

Displays map, approach, VOR, or plan modes as selected on the EFIS control panel.

Copyright © The Boeing Company. See title page for details.

First Officer Outboard Display

[Option - Integrated cue command bar]

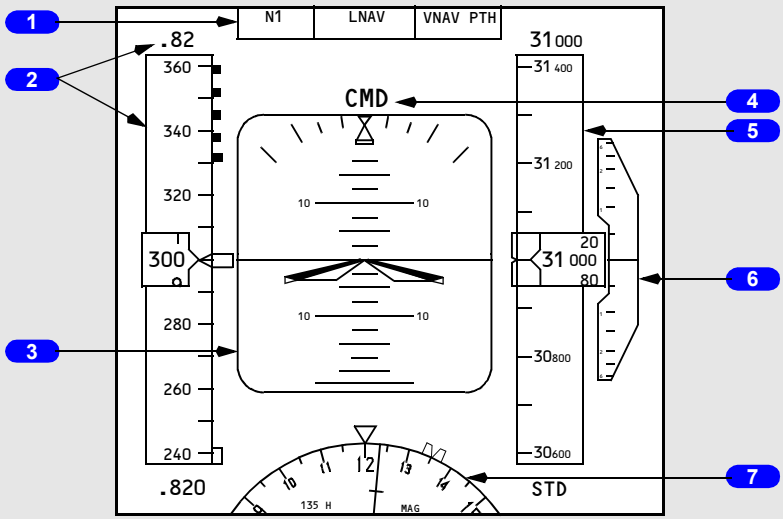

RIGHT FORWARD PANEL

1 Flight Mode Annunciator

Refer to Chapter 4, Automatic Flight

2 Airspeed/Mach Indications

3 Attitude Indications

4 Autopilot, Flight Director System Status

5 Altitude Indications

6 Vertical Speed Indications

7 Heading/Track Indications

Copyright © The Boeing Company. See title page for details.

Primary Flight Display (PFD)– PFD Airspeed Indications

PFD Airspeed Indications – General

The PFD airspeed indication displays air data inertial reference system (ADIRS) airspeed and other airspeed related information.

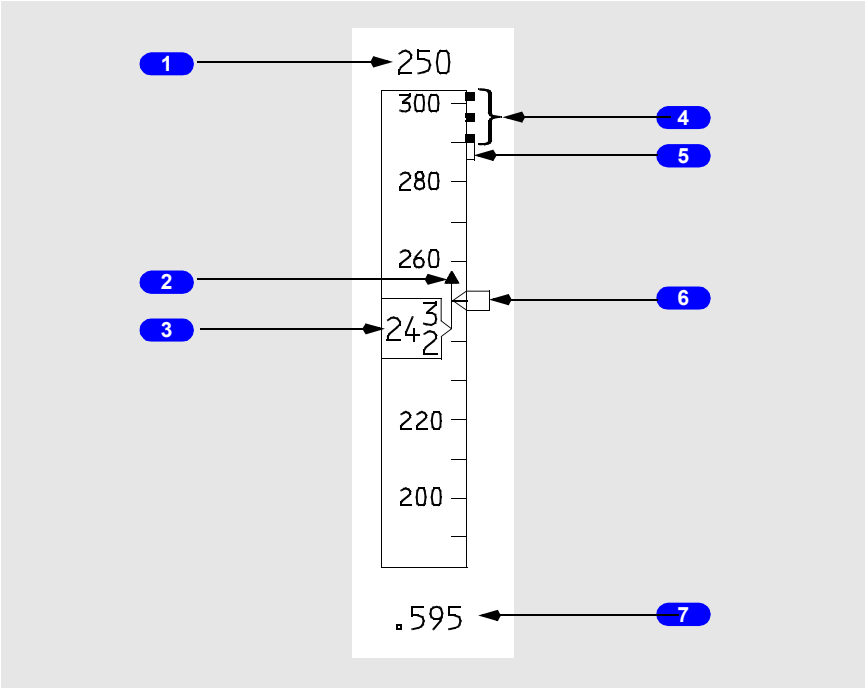

1 Selected Speed (magenta)

Displays target airspeed:

- indicates the airspeed manually selected in the IAS/MACH window
- indicates the FMC computed airspeed when the IAS/MACH window is blank.

2 Speed Trend Vector (green)

Tip of arrow indicates predicted airspeed in the next 10 seconds based on the current airspeed and acceleration.

Copyright © The Boeing Company. See title page for details.

3 Current Airspeed (white)
[Option - Low airspeed alert]

Indicates current calibrated airspeed in knots.

When current airspeed decreases into the minimum maneuver speed amber bar:

- airspeed readout box turns amber and flashes for 10 seconds
- box returns to white when airspeed is above minimum maneuver speed.

4 Maximum Speed (red and black)

Bottom of the bar indicates the maximum speed as limited by the lowest of the following:

- Vmo/Mmo
- landing gear placard speed
- flap placard speed.

5 Maximum Maneuvering Speed (amber)

Bottom of the bar indicates the airspeed that provides a 0.3 g maneuver margin to high speed buffet. May be displayed at high altitude with flaps up, at relatively high gross weights.

6 Speed Bug (magenta)

Points to the airspeed:

- manually selected in the IAS/MACH window
- indicates the FMC computed airspeed when the IAS/MACH window is blank.

When the selected speed is off scale, the bug is parked at the top or bottom of the tape, with only one half bug visible.

7 Current Mach (white)
[Option - Without groundspeed displayed]

Indicates current Mach number:

- displays when airspeed is 0.40 Mach and above
- blanks when airspeed decreases below 0.40 Mach.

Copyright © The Boeing Company. See title page for details.

DO NOT USE FOR FLIGHT

7 Current Mach/Groundspeed (white)
[Option - With groundspeed displayed]

Indicates current Mach or groundspeed:

- displays Mach when airspeed is 0.40 Mach and above
- displays groundspeed when airspeed decreases below 0.40 Mach
- when transitioning from Mach to groundspeed or from groundspeed to Mach, a white box shows around the numeric value for 10 seconds.

PFD Airspeed Indications – Takeoff and Approach

[Option - 100 knot airspeed bug]

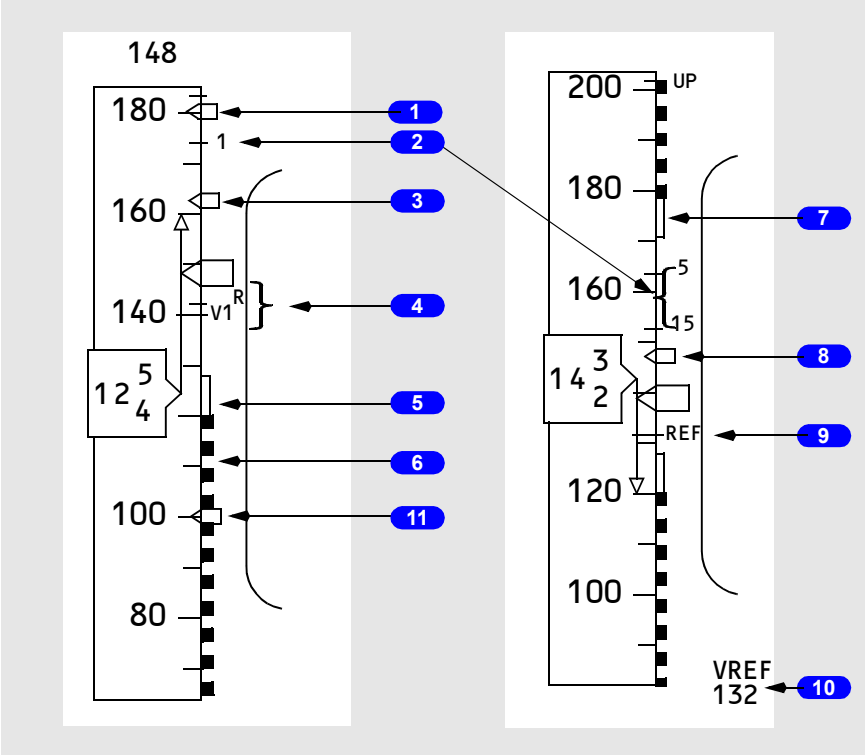

1 Bug 5 (white)

Displayed if speed reference selector on the engine display control panel is in the bug 5 position or SET position and a value greater than 60 knots has been selected. Not available if the speed reference selector is in the AUTO position.

Copyright © The Boeing Company. See title page for details.

2 Flaps Maneuvering Speeds (green)

Indicates flap maneuvering speed for the displayed flap position:

- displayed after gross weight is entered in the CDU or after takeoff gross weight is set with the speed reference selector
- when the V2+15 bug is displayed for takeoff, the flap maneuvering speed bug for the current flap setting is not displayed, except for flaps 1 takeoff.
- numbered flap maneuvering speed bugs are removed when flap lever is moved to flaps 30 or 40
- flap bugs inhibited if less than VREF +4
- UP bug not displayed above approximately 20,000 feet altitude.

3 V2+15 (white)

Displayed for takeoff.

Removed when either of the following occurs:

- at first flap retraction
- when VREF is entered in the CDU.

4 Takeoff Reference Speeds (green)

Indicates V1 (decision speed) and VR (rotation speed) as selected on the CDU TAKEOFF REF page (refer to Chapter 11, Flight Management, Navigation) or as set with the speed reference selector on the engine display control panel:

- amber NO VSPD is displayed on the ground if V1 or VR is not selected on the CDU or is not set with the speed reference selector
- displayed for takeoff when speed is greater than 80 knots
- removed at lift–off
- V1 speed is displayed at the top of airspeed indication when selected and value is off scale.

[Option - V1 aural alert]

- V1 is automatically called out by voice aural.

Note: The Look Ahead Terrain Alerting system must be incorporated for the automatic V1 aural callout to be functional.

5 Minimum Maneuver Speed (amber)

Top of bar indicates minimum maneuver speed.

Inhibited on takeoff until first flap retraction or valid VREF entered.

6 Minimum Speed (red and black)

Top of bar indicates the speed at which stick shaker occurs.

Copyright © The Boeing Company. See title page for details.

7 Maximum Maneuvering Speed (amber)

When flaps are not up, bottom of the bar indicates flap limit placard speed for the next normal flap setting. The display logic is based on a normal flap setting sequence of 1, 5, 15, 30. The bar is removed when the flap lever is moved to the landing flap selected on the APPROACH REF page or when the flap lever is moved to flaps 30 or 40.

[Option] - CDS Software Upgrade - Block point 2002
When flaps are not up, bottom of the bar indicates flap limit placard speed for the next normal flap setting. The display logic is based on a normal flap setting sequence of 1, 5, 15, 30. The bar is removed when the flaps reach the landing flap selected on the APPROACH REF page or when the flaps reach flaps 40.

8 VREF+15 (white)

Displayed after selection of VREF.

9 Landing Reference Speed (green)

Indicates REF (reference speed) as selected on the CDU APPROACH REF page (refer to Chapter 11, Flight Management, Navigation) or as set with the speed reference selector on the engine display control panel.

REF speed is displayed at the bottom of airspeed indication when selected and value is off scale.

10 Speed Reference Display (green)

Displayed if the airspeed and/or weight is entered via the speed reference selector on the engine display control panel:

- on the ground, V1, VR, and takeoff gross weight may be selected; if VREF is selected, INVALID ENTRY is displayed
- in flight, VREF and landing gross weight may be selected; if V1 or VR is selected, INVALID ENTRY is displayed
- removed when the speed reference selector is moved to the SET position.

11 100 Knot Airspeed Bug (white)
[Option - 100 knot airspeed bug]

Indicates 100 knots:

- displayed automatically during preflight
- removed at first flap retraction or when VREF is entered.

Copyright © The Boeing Company. See title page for details.

PFD Angle of Attack (AOA) Indications

[Option]

Angle of Attack Indications - General

The angle of attack indications display ADIRU aircraft body angle of attack.

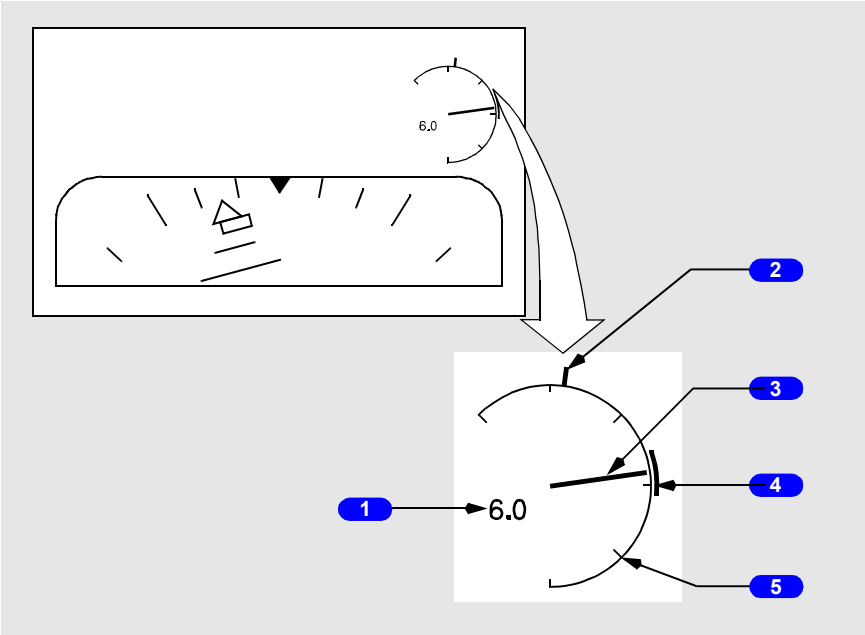

1 Digital AOA Readout (white)

Indicates digital AOA value to the nearest 0.2 degrees. When on the ground and ground speed less than 80 knots, the readout is fixed at 0.0 degrees.

2 Stick Shaker Indicator (red)

Indicates point at which stick shaker activation occurs for existing flight conditions.

Blank if AOA signal is invalid.

3 Analog Needle (white)

Indicates analog AOA value.

- needle travel is limited to a range of -6 degrees and +21 degrees
- fixed at 0.0 degrees when on the ground and ground speed is less than 80 knots.

Copyright © The Boeing Company. See title page for details.

4 Approach Reference Band (green)

Indicates appropriate range of approach AOA for a Vref(xx) + 5 approach.

- displayed when in normal or single engine landing flaps (15, 30, 40)
- moves with flap position
- inhibited on takeoff and initial climb.

5 Zero Degree Reference Line (white)

Indicates zero degrees angle of attack. Reference lines are displayed every 5 degrees from -5 degrees to +20 degrees.

PFD – Attitude Indications

Attitude Indications – General

The attitude indication displays ADIRS attitude information.

[Option - Integrated cue command bar]

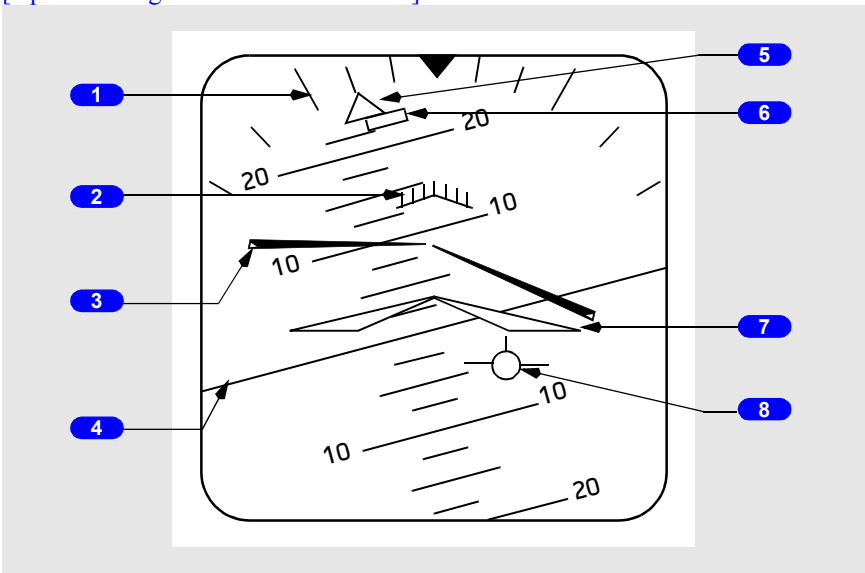

1 Bank Scale (white)

Provides fixed reference for the bank pointer; scale marks are at 0, 10, 20, 30, 45, and 60 degrees.

Copyright © The Boeing Company. See title page for details.

2 Pitch Limit Indication (amber)

Indicates pitch limit (stick shaker activation for existing flight conditions).

- displayed when the flaps are not up.

[Option - PLI pop-up]

- displayed at slow speeds with the flaps up.

3 Flight Director Bar (magenta)

Indicates flight director steering commands. (Refer to Chapter 4, Automatic Flight.)

4 Horizon Line and Pitch Scale (white)

Indicates the horizon relative to the airplane symbol; pitch scale is in 2.5 degree increments.

5 Bank Pointer

Indicates bank angle; fills and turns amber if bank angle is 35 degrees or more.

6 Slip/Skid Indication

Displaces beneath the bank pointer to indicate slip or skid:

- fills white at full scale deflection
- turns amber if bank angle is 35 degrees or more; fills amber if the slip/skid indication is also at full scale deflection.

7 Airplane Symbol

Indicates airplane attitude relative to the horizon.

8 Flight Path Vector (FPV) Indication (white)

Displays flight path angle and drift when selected on the EFIS control panel:

- flight path angle is displayed relative to the horizon line
- drift angle is displayed relative to display center.

Copyright © The Boeing Company. See title page for details.

DO NOT USE FOR FLIGHT

PFD LNAV/VNAV Deviation Indications

[Option - LNAV/VNAV deviation scale and pointer]

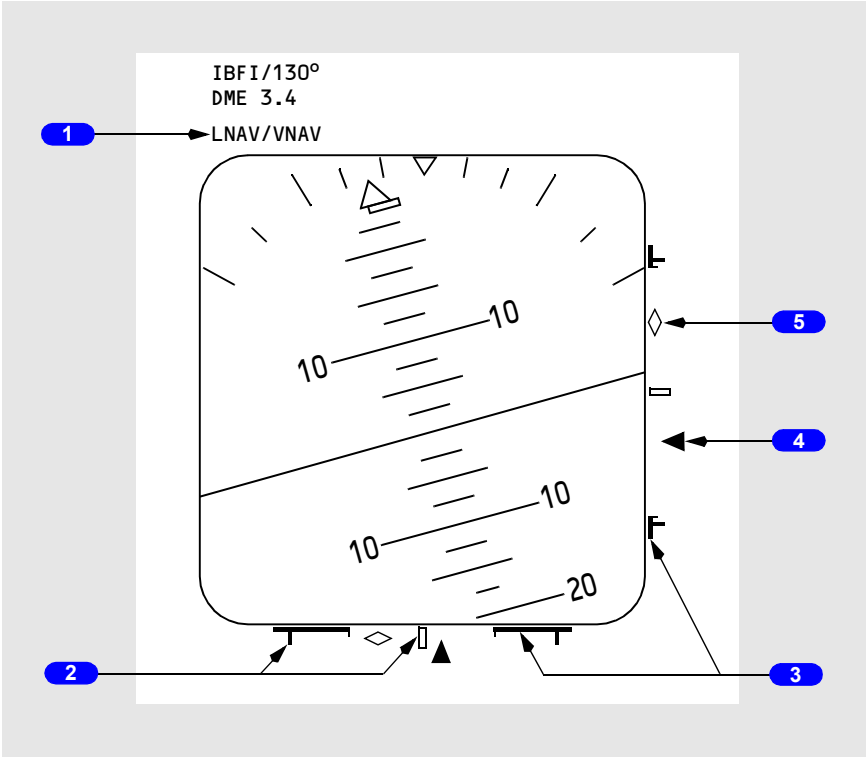

1 Scale ID Annunciation (white)

- displayed in response to engaged pitch and role FMA's.
- displayed above the left corner of ADI.
- indicates the source of displayed deviation for each scale.
- Possible annunciation combinations include:
  - LOC/VNAV - (Localizer with VNAV Deviation)
  - LNAV/G/S - (LNAV Deviation with Glideslope)
  - LNAV/VNAV - (LNAV and VNAV Deviations)
  - FAC/VNAV - (Final Approach Course and VNAV)
  - LNAV/G/P - (LNAV and Glide Path)

Copyright © The Boeing Company. See title page for details.

2 LNAV/VNAV Deviation Scale

- LNAV deviation scale represents current FMC lateral RNP.
- VNAV deviation scale represents default RNP values.
- displayed if an approach mode is not engaged and either LNAV or any VNAV mode is engaged.

3 Actual Navigation Performance (ANP) Bars

- lateral/vertical indication of available flight technical error remaining based on total system error.
- lateral ANP bars can be displayed in all phases of flight.
- vertical ANP bars can be displayed only after reaching top-of-descent.
- originate from outer scale and expand inward as a function of increasing ANP relative to RNP.
- will just touch at center of scale when ANP equals RNP.
- turn from white to amber if current lateral deviation is within the ANP bar limits for 10 continuous seconds.

4 LNAV/VNAV Pointer

- a filled magenta symbol when it is not parked at deflection limit.
- an unfilled pointer outline when at deflection limit
- indicates lateral/vertical paths relative to the airplane

5 Anticipation Cues

- displayed if valid approach course deviation information is being received while corresponding LNAV/VNAV deviation scale and pointer are displayed.
- an unfilled white diamond symbol.
- if engaged lateral mode subsequently transitions to LOC, LNAV deviation indications will be removed, and normal ILS localizer indications will be displayed.
- if engaged vertical mode subsequently transitions to G/S, VNAV deviation indications will be removed, and normal ILS G/S indications will be displayed.

Copyright © The Boeing Company. See title page for details.

PFD Instrument Landing System Indications

[Option - Integrated cue command bar, rising runway]

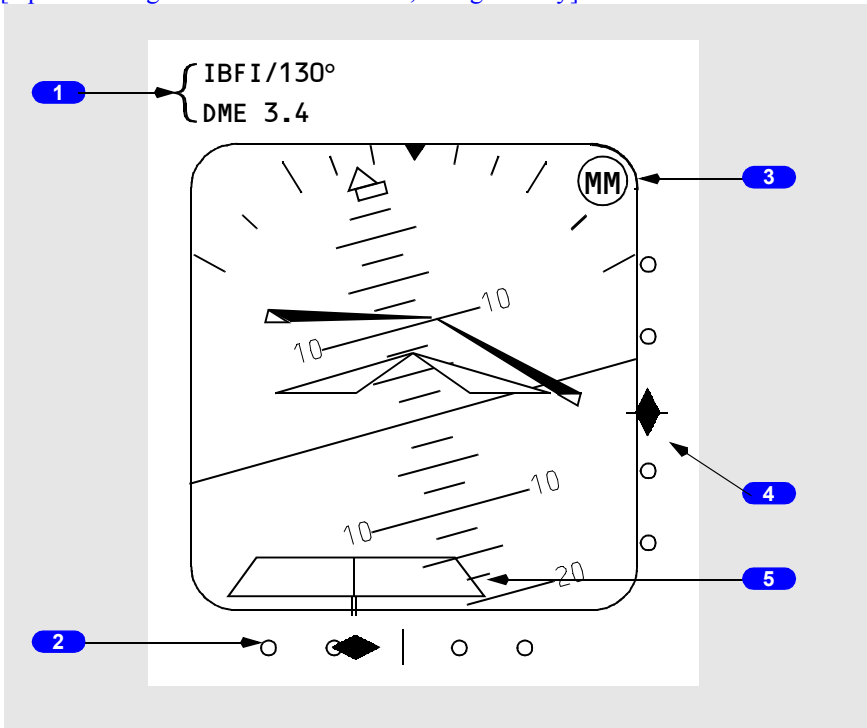

1 Approach Reference

Displays the selected ILS identifier or frequency, approach front course, and ILS/DME distance.

If the tuned ILS frequencies disagree, the frequency turns amber with an amber horizontal line through it.

If the approach courses entered in the MCP disagree, the course turns amber with an amber horizontal line through it.

2 Localizer Pointer and Deviation Scale

The pointer:

- indicates localizer position relative to the airplane
- in view when the localizer signal is received
- fills in solid magenta when within 21/2 dots from center.

Copyright © The Boeing Company. See title page for details.

The scale:

- indicates deviation
- in view when the localizer frequency is tuned
- expands when the localizer is engaged and deviation is slightly more than one–half dot.

At low radio altitudes, with autopilot engaged, the scale turns amber and the pointer flashes to indicate excessive localizer deviation.

Below 1,000 feet AGL, with LNAV engaged and LOC armed, the localizer scale turns amber and the pointer flashes if the localizer is not captured.

Each pilot's deviation alerting system self-tests upon becoming armed at 1500 feet radio altitude. This self-test generates a two second LOC deviation alerting display on each attitude indicator.

3 Marker Beacon symbol

Flashes when over one of the marker beacons:

OM (cyan) - an outer marker beacon

MM (amber) - a middle marker beacon

IM (white) - an airway or inner marker.

4 Glide Slope Pointer and Deviation Scale

The pointer:

- indicates glide slope position
- in view when the glide slope signal is received
- fills in solid magenta when within 21/2 dots from center.
- not displayed when the track and the front course on the mode control panel differ by more than 90 degrees (backcourse).

The scale:

- indicates deviation
- in view when the localizer frequency is tuned.

At low radio altitudes, with autopilot engaged, the scale turns amber and the pointer flashes to indicate excessive glide slope deviation.

Each pilot's deviation alerting system self-tests upon becoming armed at 1500 feet radio altitude. This self-test generates a two second G/S deviation alerting display on each attitude indicator.

Copyright © The Boeing Company. See title page for details.

5 Rising Runway (green with magenta stem)
[Option - Rising runway]

Displayed when:

- localizer signal usable and pointer is in view
- radio altitude is less than 2500 feet.

Rises towards airplane symbol when radio altitude is below 200 feet.

Expanded Localizer Indications

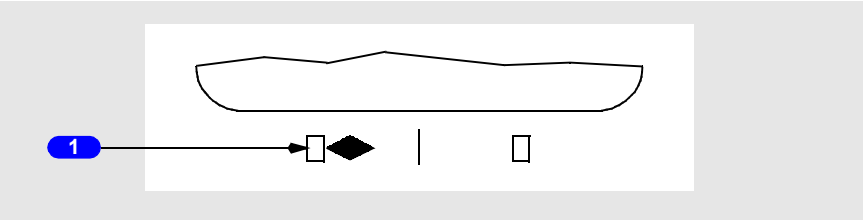

1 Expanded Localizer Scale

[Option - Autopilot or flight director activation]
Displayed when the autopilot or flight director is in LOC mode, deviation is slightly more than one half dot and track is within 5 degrees of the MCP selected course.

As deviation increases, the deviation pointer remains filled in solid magenta and parks at the limit of the expanded scale. Once the deviation reaches the equivalent of 2.4 dots from center on the standard scale, the pointer becomes unfilled.

Reverts to standard scale when out of LOC mode, and groundspeed is less than 30 knots or radio altitude is greater than 200 feet.

A rectangle equals 1/2 dot deviation.

PFD Radio Altitude Indications

[Option - Radio altitude above, round dial]

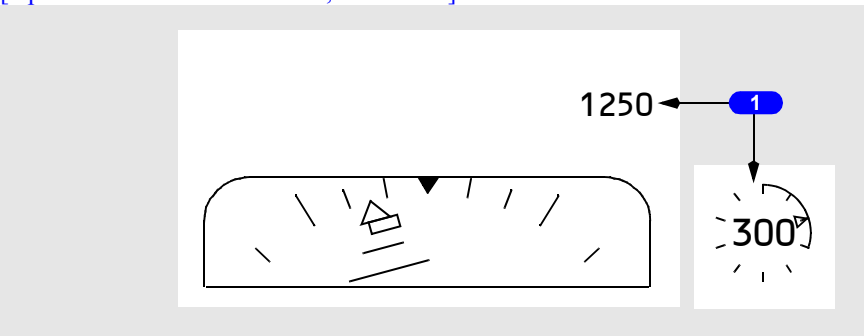

Copyright © The Boeing Company. See title page for details.

1 Radio Altitude – Round Dial
[Option - Radio altitude above, round dial]

Displayed below 2500 feet AGL:

- digital display from 2500 to 1000 feet AGL
- box highlighted white for 10 seconds upon descent below 2500 feet
- round dial displays below 1000 feet AGL
- pointer indicates selected radio altitude minimums
- the circumference of the dial is added to, or taken away from, to depict the airplane's radio altitude
- the remaining perimeter and pointer turn amber and flash for 3 seconds when below radio altitude minimums, the numeric readout does not flash.

Traffic Alert and Collision Avoidance Indications

[Option - Integrated cue command bar]

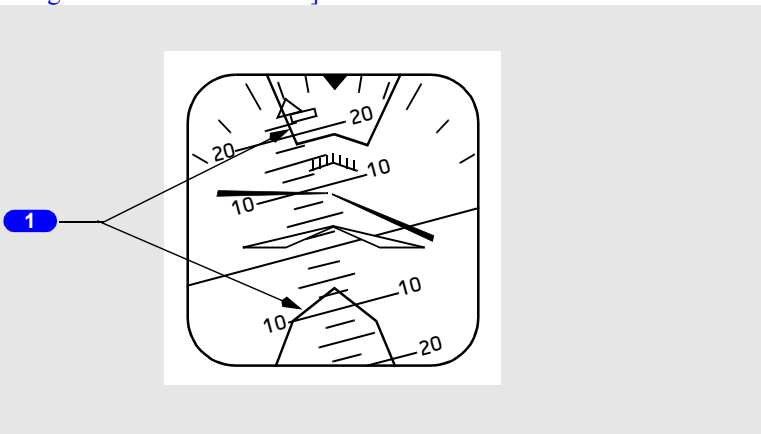

1 Traffic Alert and Collision Avoidance System Pitch Command (red)

The area(s) inside the red lines indicate(s) the pitch region(s) to avoid in order to resolve the traffic conflict. The airplane symbol must be outside the TCAS pitch command area(s) to ensure traffic avoidance. Refer to Chapter 15, Warning Systems.

Copyright © The Boeing Company. See title page for details.

DO NOT USE FOR FLIGHT

GPWS Annunciations

[Option - Integrated cue command bar]

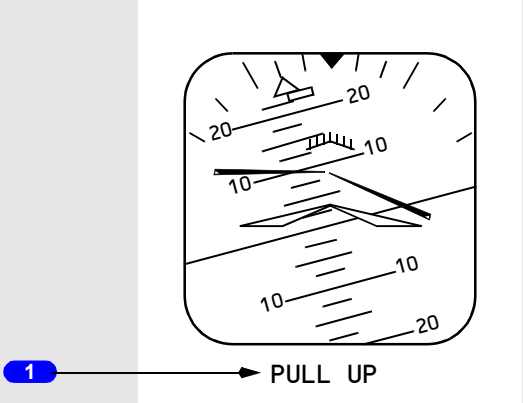

1 GPWS Annunciations (red)

Displays WINDSHEAR or Pull UP alert.

Refer to Chapter 15, Warning Systems.

Copyright © The Boeing Company. See title page for details.

PFD – Altitude Indications

Altitude Indications– General

The altitude indication displays ADIRS altitude and other altitude related information.

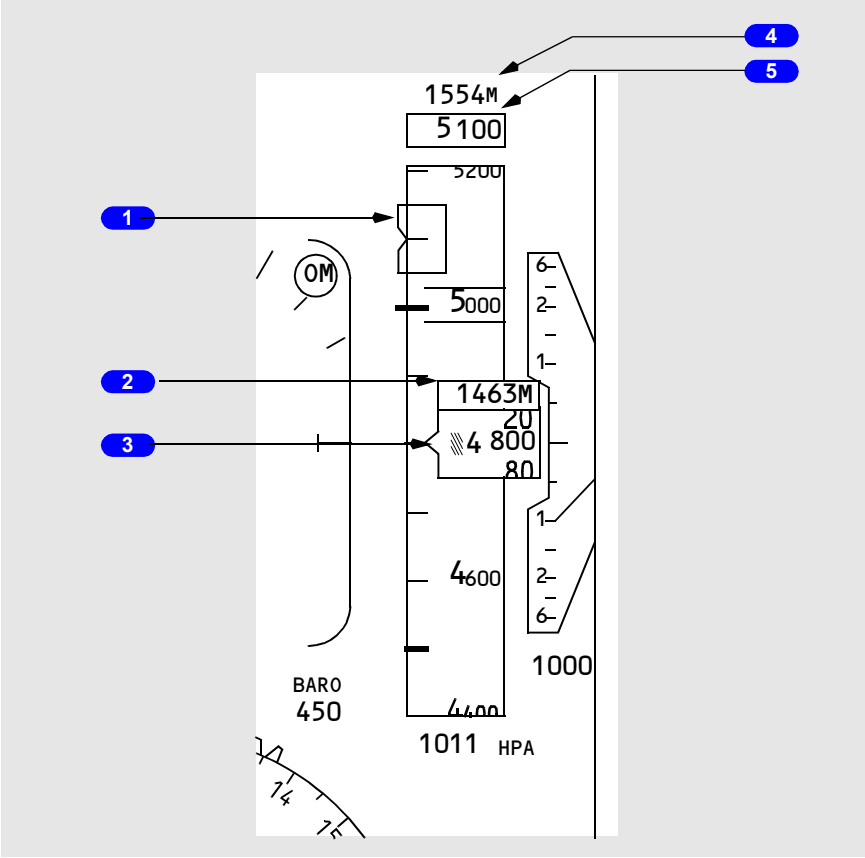

1 Selected Altitude Bug (magenta)

Indicates the altitude set in the MCP altitude window.

When the selected altitude is off scale, the bug is parked at the top or bottom of the tape, with only one half the bug visible.

2 Metric Digital Readout (readout and box–white, metric symbol–cyan)

Displays current altitude in meters when MTRS is selected on the EFIS control panel.

Copyright © The Boeing Company. See title page for details.

3 Current Altitude

Displays current altitude in increments of thousands, hundreds and twenty feet:

- for positive values of altitude below 10,000 feet, a green crosshatch symbol is displayed
- a negative sign appears when altitude below zero feet is displayed
- readout box becomes bold to denote altitude acquisition
- readout box is highlighted in amber and flashes to denote altitude deviation (refer to Chapter 4, Automatic Flight and Chapter 15, Warning Systems).

4 Metric Selected Altitude Readout (readout–magenta, metric symbol–cyan)

Displays MCP altitude in meters when MTRS is selected on the EFIS control panel.

5 Selected Altitude (magenta)

Displays the altitude set in the MCP altitude window.

The selected altitude box appears in white during an altitude alert. For more information, refer to Chapter 15, Warning Systems.

PFD Barometric Indications

[Option - Altimeter with QFE]

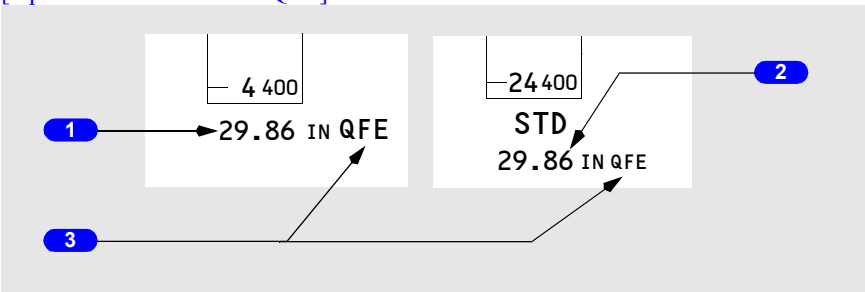

1 Barometric Settings (green)

Indicates the barometric setting in either inches of mercury (IN) or hectopascals (HPA) as selected on the EFIS control panel.

Display is boxed amber if numeric is set and airplane is climbing above transition altitude, or if STD is set and descending below transition flight level.

2 Preselected Barometric Setting (white)

STD is displayed when the Barometric Standard (STD) switch is selected on the EFIS control panel.

Copyright © The Boeing Company. See title page for details.

When STD is displayed, a barometric setting can be preselected on the EFIS control panel barometric selector and is displayed below STD.

3 QFE Altitude Reference (green)
[Option - Altimeter with QFE]

Indicates QFE altitude reference if selected on the CDU APPROACH REF Page or TAKEOFF REF Page 2/2.

When selected, QFE is boxed for 10 seconds.

The altitude tape is shaded green during QFE operation.

When QNH is selected, the green shading is removed; QNH is displayed for 10 seconds, then blanks.

When STD is displayed, QFE in small white characters is displayed below STD, and a QFE altimeter setting can be preselected.

Landing Altitude/Minimums Indications

[Option - Radio altitude above ADI, landing altitude reference bar]

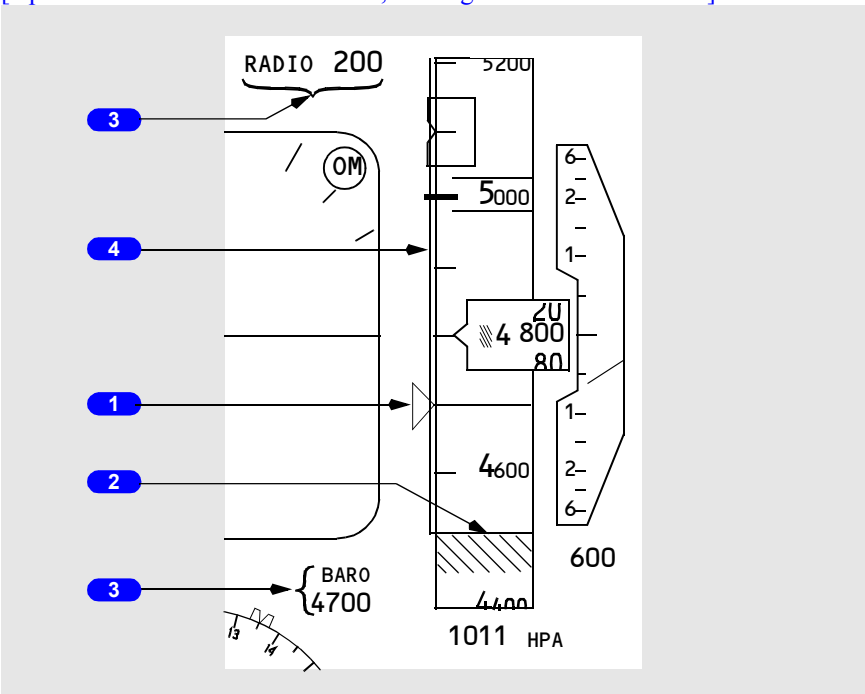

Copyright © The Boeing Company. See title page for details.

1 BARO Minimums Pointer (green)

Indicates the barometric minimums selected on the EFIS control panel:

- pointer and line turn amber when airplane descends below selected minimum altitude
- reset with the RST switch on the EFIS control panel.

2 Landing Altitude Indication (amber)

The crosshatched area indicates:

- the FMC landing altitude for the destination runway or airport, or
- the landing altitude for departure runway or airport until 400 NM from departure or one-half the distance to destination, whichever occurs first.

3 Minimums Reference/Altitude (green)
[Option - Radio altitude above ADI]

Displays approach minimum reference and altitude set by the MINS selector on the EFIS control panel:

BARO -

- displayed below ADI when selector is set to BARO, minimums are in feet MSL
- turns amber and flashes for 3 seconds when airplane descends below selected minimum altitude.
- changes back to green:
  - when passing the selected minimum altitude plus 75 feet during go–around
  - at touchdown
  - after pressing the RST switch on the EFIS control panel.

RADIO -

- displayed above ADI when selector is set to RADIO, minimums are in feet AGL
- blank when an altitude less than 0 feet is selected
- turns amber and flashes for 3 seconds when airplane descends below selected minimum altitude
- changes back to green:
  - when passing the selected minimum altitude plus 75 feet during go–around
  - at touchdown
  - after pressing the RST switch on the EFIS control panel.

Copyright © The Boeing Company. See title page for details.

4 Landing Altitude Reference Bar
[Option]

Indicates height above touchdown:

- White bar - 500 to 1000 feet above landing altitude
- Amber bar - 0 to 500 feet above landing altitude.

PFD – Vertical Speed Indications

Vertical Speed Indications – General

The vertical speed indication displays ADIRS instantaneous vertical speed.

[Option - VSI TCAS advisory]

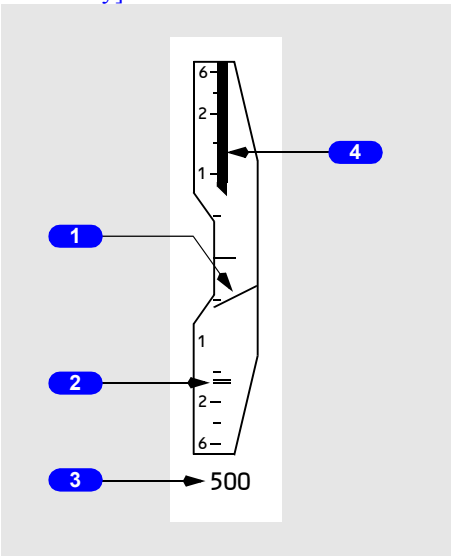

1 Vertical Speed Pointer (white)

Indicates current vertical speed.

2 Selected Vertical speed Bug (magenta)

Indicates the speed selected in the MCP vertical speed window with V/S pitch mode engaged.

3 Vertical speed (white)

Displays vertical speed when greater than 400 feet per minute.

The display is located above the vertical speed indication when climbing and below when descending.

Copyright © The Boeing Company. See title page for details.

4 TCAS Vertical Speed Tape (red)
[Option - VSI TCAS advisory]

Tape turns red to indicate vertical speed values to avoid or exit during a TCAS resolution advisory.

Vertical speed pointer is red if it is within the vertical speed tape range.

Supplements TCAS resolution advisory pitch commands on the attitude indication.

PFD - Heading and Track Indications

Heading and Track Indications– General

The heading and track indications display current FMC/ADIRS heading, track and other information.

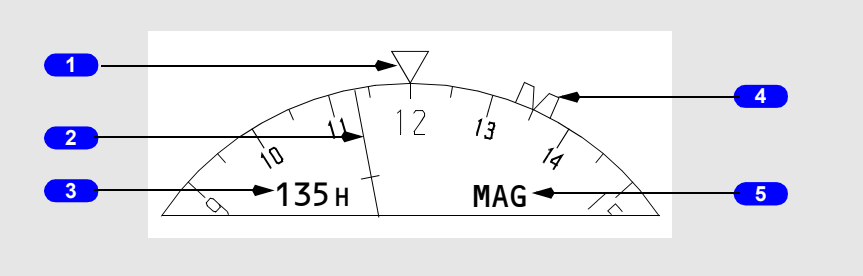

1 Current Heading Pointer (white)

Indicates current heading.

2 Track Pointer (white)

Indicates current track.

3 Selected Heading (magenta)

Digital display of the selected heading bug.

4 Selected Heading Bug (magenta)

Indicates the heading selected on the mode control panel. If the selected heading exceeds the display range, the bug parks on the side of the compass rose in the direction of the shorter turn to the heading.

Copyright © The Boeing Company. See title page for details.

5 Magnetic/True Heading Annunciation (green)

Displays selected heading reference:

- MAG indicates display is oriented relative to magnetic north
- TRU indicates display is oriented relative to true north; a white box is displayed continuously around TRU
- transition from TRU to MAG results in a green box around MAG for 10 seconds
- when TRU is displayed and the airplane descends more than 2000 feet at a descent rate greater than –800 feet per minute, an amber box is drawn around TRU; the box flashes for 10 seconds, then turns steady amber.

PFD Failure Flags

The flag replaces the appropriate display to indicate source system failure or lack of computed information.

[Option - Radio altitude below ADI, Angle of Attack indicator

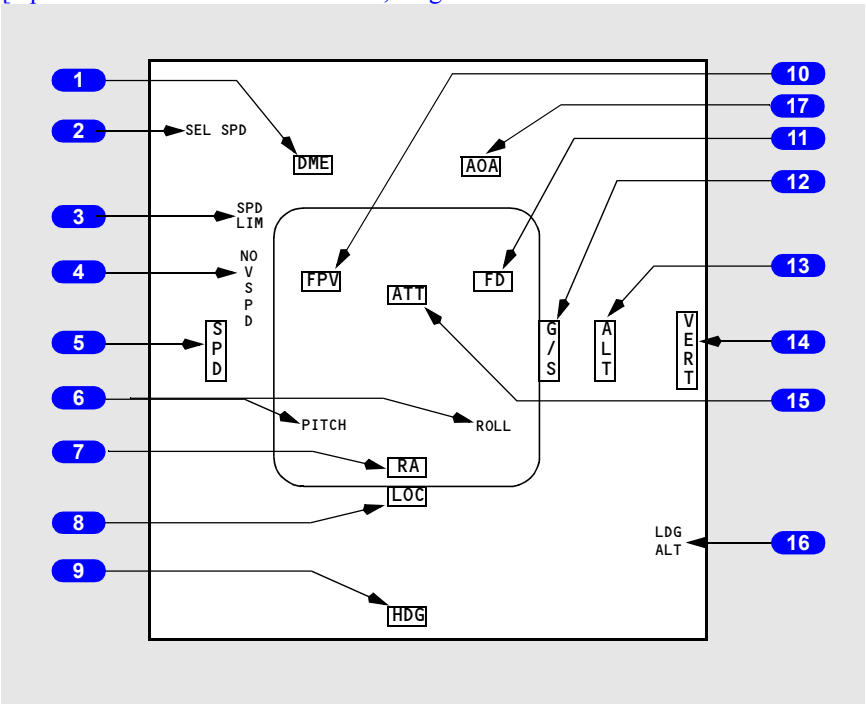

1 Distance Measuring Equipment (amber)

The DME system has failed.

Copyright © The Boeing Company. See title page for details.

2 Selected Speed (amber)

The selected airspeed data is invalid.

3 Speed Limit Flag (amber)

Displays related with stick shaker or maximum operating speed has failed:

- if the stick shaker warning has failed, the red and black stick shaker speed bar is removed
- if the maximum operating speed has failed, the red and black maximum operating speed bar is removed.

4 No V Speeds Flag (amber)

V1 (decision speed) or VR (rotation speed) has not been entered or is invalid.

5 Speed Flag (amber)

The speed indication is inoperative. All indication markings are removed.

6 Pitch/Roll Comparator Annunciation (amber)

PITCH displayed when Captain's and F/O's pitch angle displays differ by more than 5 degrees.

ROLL displayed when Captain's and F/O's roll angle displays differ by more than 5 degrees.

[Option - Attitude comparator flashing]
The flags flash for 10 seconds then remain steady.

7 Radio Altitude Flag (amber)

The radio altitude display has failed.

8 Localizer Flag (amber)

An ILS frequency is tuned and the ILS localizer deviation display on the attitude indication has failed.

9 Heading Flag (amber)

Heading information failed.

10 Flight Path Vector Flag (amber)

FPV is selected on the EFIS control panel, but has failed. De–selection of FPV removes the flag.

Copyright © The Boeing Company. See title page for details.

11 Flight Director Flag (amber)

The flight director has failed.

12 Glide Slope Flag (amber)

An ILS frequency is tuned and the ILS glide slope deviation display on the attitude indication has failed.

13 Altitude Flag (amber)

The altitude display has failed.

14 Vertical Speed Flag (amber)

Vertical speed has failed.

15 Attitude Flag (amber)

The attitude display has failed.

16 Landing Altitude Flag (amber)

The landing altitude input is not available or invalid.

17 Angle of Attack (amber)
[Option - Angle of Attack indicator]

The AOA signal has failed or is invalid when ground speed is greater than 80 knots.

Copyright © The Boeing Company. See title page for details.

[Option - Radio altitude above ADI]

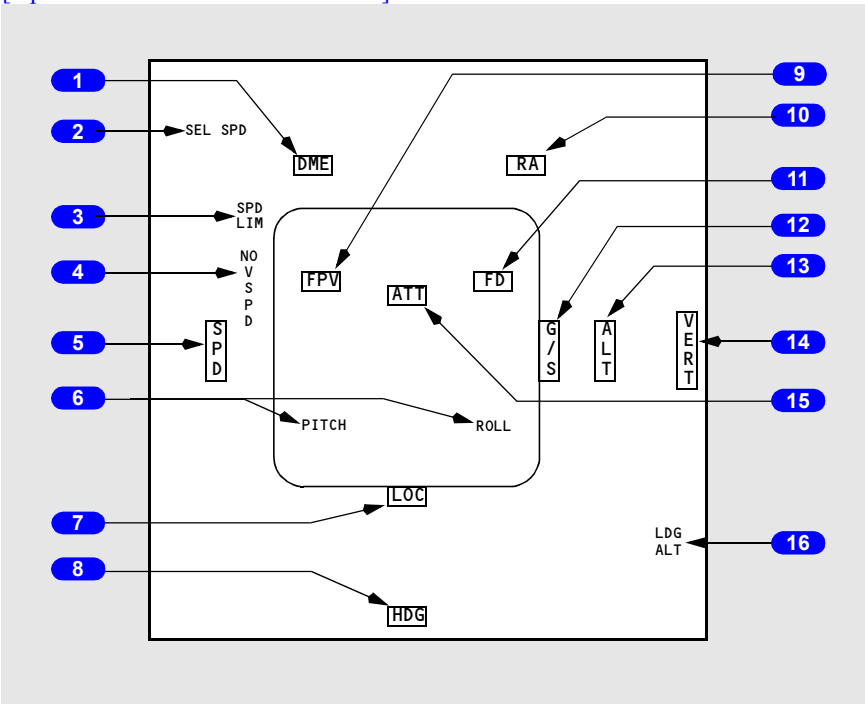

1 Distance Measuring Equipment (amber)

The DME system has failed.

2 Selected Speed (amber)

Invalid data.

3 Speed Limit Flag (amber)

Displays related with stick shaker or maximum operating speed has failed:

- if the stick shaker warning has failed, the red and black stick shaker speed bar is removed
- if the maximum operating speed has failed, the red and black maximum operating speed bar is removed.

4 No V Speeds Flag (amber)

V1 (decision speed) or VR (rotation speed) has not been entered or is invalid.

5 Speed Flag (amber)

The speed indication is inoperative. All indication markings are removed.

Copyright © The Boeing Company. See title page for details.

6 Pitch/Roll Comparator Annunciation (amber)

PITCH displayed when Captain's and F/O's pitch angle displays differ by more than 5 degrees.

ROLL displayed when Captain's and F/O's roll angle displays differ by more than 5 degrees.

[Option - Attitude comparator flashing]
The flags flash for 10 seconds then remain steady.

7 Localizer Flag (amber)

An ILS frequency is tuned and the ILS localizer deviation display on the attitude indication has failed.

8 Heading Flag (amber)

Heading information failed.

9 Flight Path Vector Flag (amber)

FPV is selected on the EFIS control panel, but has failed. De–selection of FPV removes the flag.

10 Radio Altitude Flag (amber)

The radio altitude display has failed.

11 Flight Director Flag (amber)

The flight director has failed.

12 Glide Slope Flag (amber)

An ILS frequency is tuned and the ILS glide slope deviation display on the attitude indication has failed.

13 Altitude Flag (amber)

The attitude display has failed.

14 Vertical Speed Flag (amber)

Vertical speed has failed.

15 Attitude Flag (amber)

The attitude display has failed.

Copyright © The Boeing Company. See title page for details.

16 Landing Altitude Flag (amber)

The landing altitude input is not available or invalid.

Additional Annunciations and Alerts

Displays Control Panel Annunciation

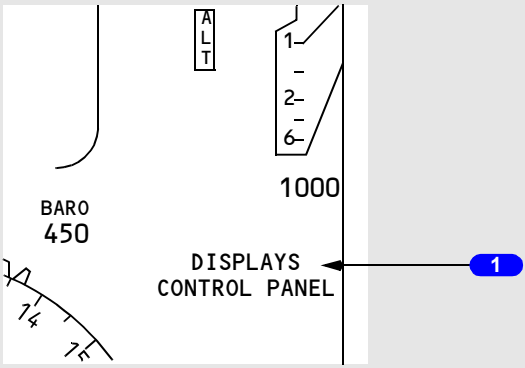

1 Displays Control Panel Annunciation (amber)

With the CONTROL PANEL select switch on the overhead panel in:

- BOTH ON 1 - left (Capt) EFIS control panel has failed
- NORMAL - corresponding EFIS control panel has failed
- BOTH ON 2 - right (F/O) EFIS control panel has failed.

Altitude information is removed.

Copyright © The Boeing Company. See title page for details.

Display System Annunciations

Note: The following annunciations occupy the same display location in the lower left corner of the primary flight display.

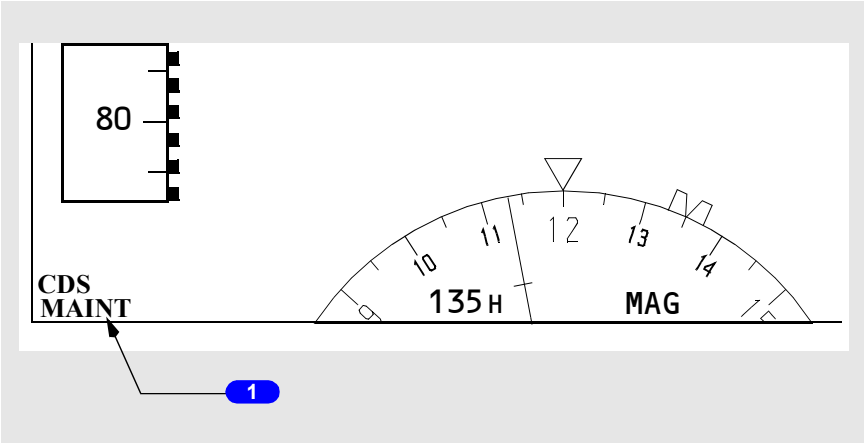

1 Display System Annunciations

DSPLY SOURCE (amber) – A single DEU has been selected, either manually or automatically, to drive all six display units.

- If the DEU fails on the same side as the engaged autopilot during climb or descent –

[Option – Integrated cue command bar]

  - the flight directors are removed from both pilots' displays. The flight directors reappear at ALT ACQ
  - the pitch mode reverts to CWS pitch
  - the autopilot remains engaged.
- If the DEU fails on the same side as the engaged autopilot during level flight –
  - climb or descent to a new MCP altitude is not possible in LVL CHG, VNAV, or V/S modes with the autopilot engaged.
- If the DEU fails on the opposite side as the engaged autopilot or while in manual F/D mode during climb or descent –

[Option – Integrated cue command bar]

  - the flight director is removed from the pilot's display on the failed side until ALT ACQ
  - climb or descent is possible in LVL CHG, VNAV or V/S modes with the autopilot engaged.
- If the DEU fails on the same side as the engaged autopilot in the APPROACH mode –

Copyright © The Boeing Company. See title page for details.

[Option – Integrated cue command bar]

- the flight directors are removed from the pilot's display on the failed side.

[Option - With CDS Block 99 software upgrade or higher]
CDS MAINT (white) – A dispatchable CDS fault has occurred. Displayed on the ground only, prior to start of the second engine.

[Option - Without CDS Block 99 software upgrade or higher]
CDS MAINT (white) – A non-dispatchable CDS fault has occurred. Displayed on the ground only, prior to start of the second engine.

CDS FAULT (amber) – A non–dispatchable CDS fault has occurred. Displayed on the ground only, prior to start of the second engine.

Instrument Switch Annunciation

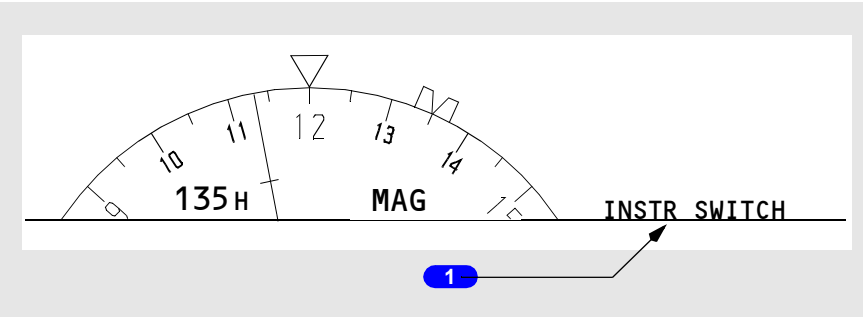

1 INSTR SWITCH Annunciation (amber)

Indicates both the Captain's and First Officer's displays are using the same source of IRU data.

Displayed when the IRS switch on the overhead panel is not in the NORMAL position.

Copyright © The Boeing Company. See title page for details.

Airspeed Disagree Alert

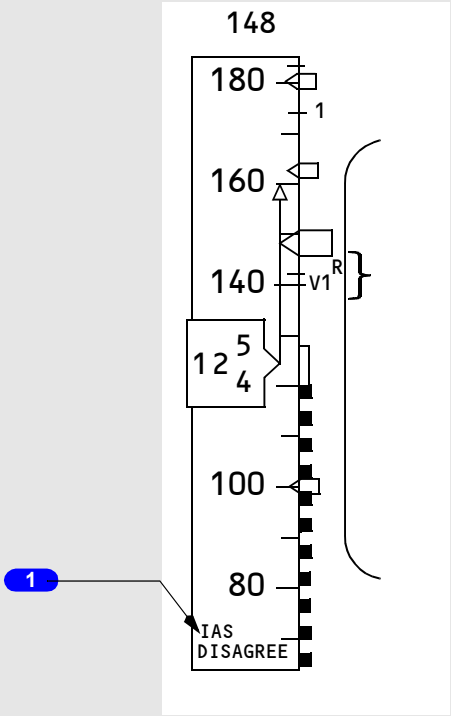

1 Airspeed Disagree Alert (amber)

Indicates the Captain's and F/O's airspeed indications disagree by more than 5 knots for 5 continuous seconds.

Copyright © The Boeing Company. See title page for details.

Altitude Disagree Alert

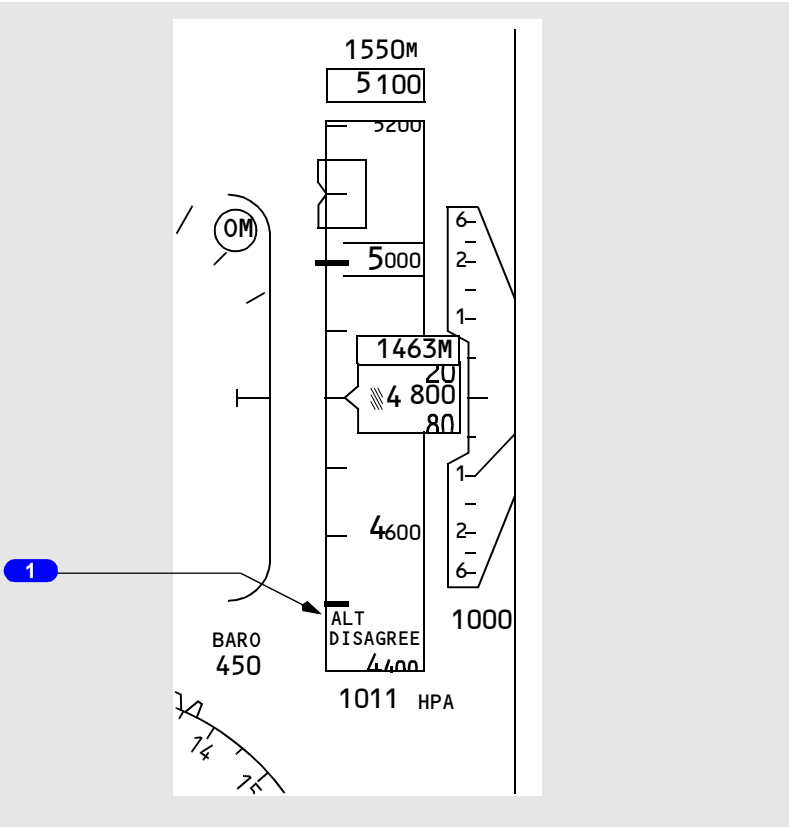

1 Altitude Disagree Alert (amber)

Indicates the Captain's and F/O's altitude indications disagree by more than 200 feet for more than 5 continuous seconds.

Navigation Displays – MAP Mode

Note: Refer to section 41 of this chapter for a detailed explanation of the navigation symbology shown on the following pages.

Copyright © The Boeing Company. See title page for details.

Expanded and Center MAP Modes

[Option - Track-up display, weather radar range arcs, dual FMC, ADF]

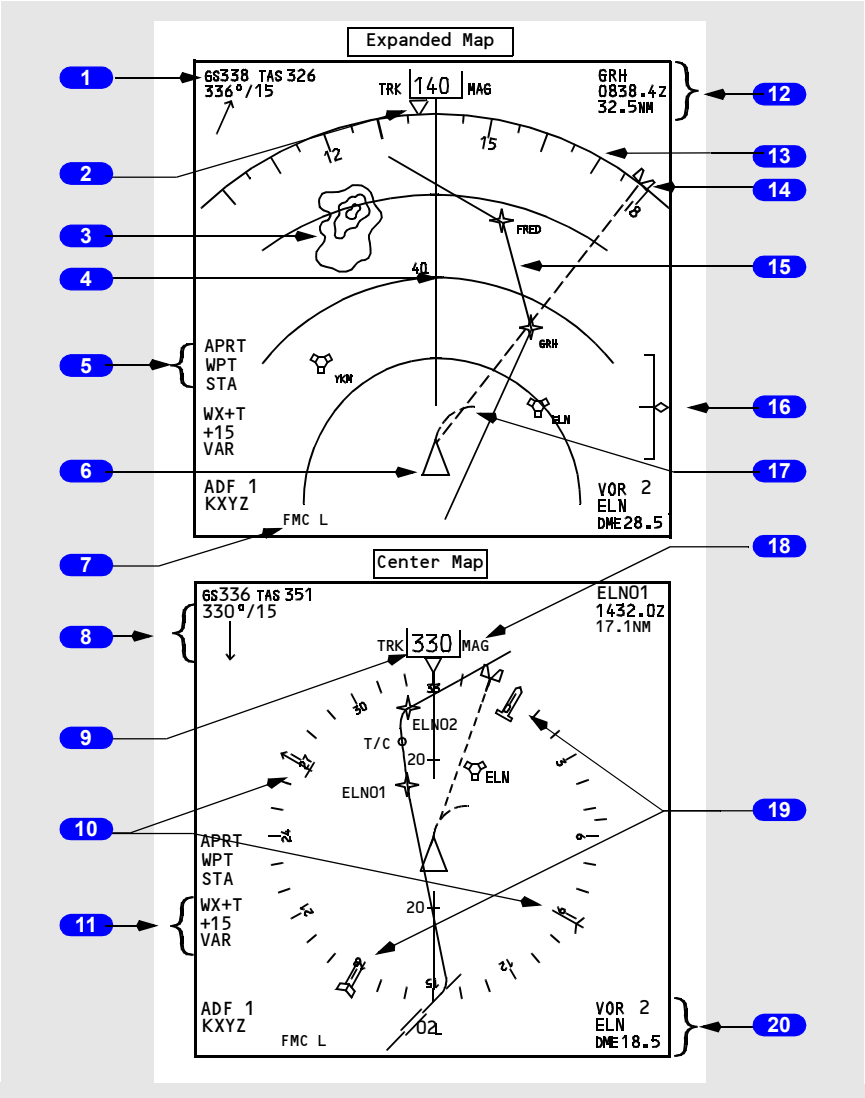

1 **Groundspeed/True Airspeed**

2 **Heading Pointer**

3 **Weather Radar Returns**

Copyright © The Boeing Company. See title page for details.

4 **Track Line and Range Scale**

5 **Map Options**

6 **Airplane Symbol**

7 **Map Source Annunciation**

8 **Wind Direction/Speed/Arrow**

9 **Current Track**
[Option - Track-up display]

10 **Number 1 VOR/ADF Pointer**
[Option - ADF]

11 **Weather Radar Annunciations**

12 **Active Waypoint/ETA/Distance–To–Go**

13 **Compass Rose**

14 **Selected Heading Bug**

15 **Active LNAV Route**

16 **Vertical Deviation Scale and Pointer**

17 **Position Trend Vector**

18 **Magnetic/True Reference**

19 **Number 2 VOR/ADF Pointer**
[Option - 2 ADF receivers]

20 **VOR/ADF Selection, Ident/Frequency, VOR DME**
[Option - 2 ADF receivers]

Copyright © The Boeing Company. See title page for details.

Navigation Displays – Approach Mode

Expanded and Center Approach Modes

[Option - Weather radar range arcs, ADF]

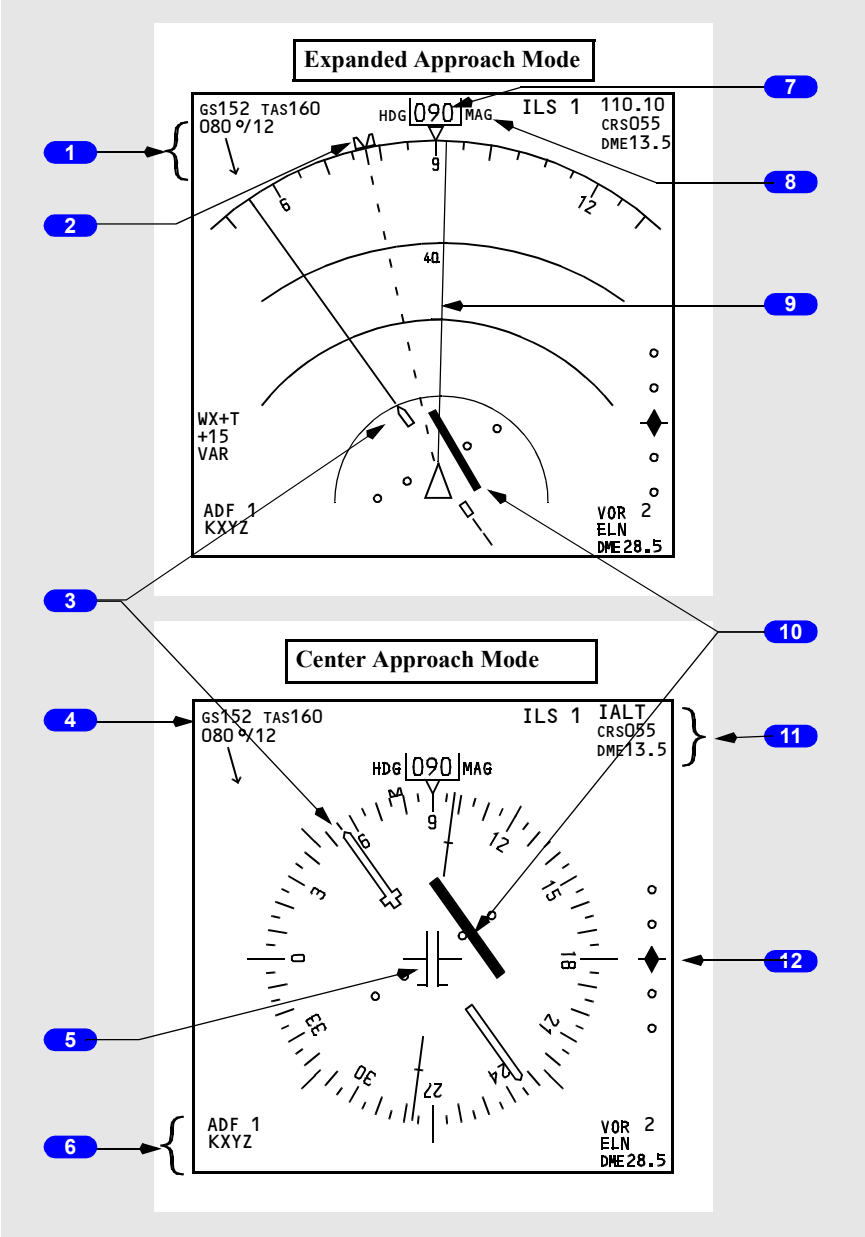

Copyright © The Boeing Company. See title page for details.

1 **Wind Direction/Speed/Arrow**

2 **Selected Heading Bug**

3 **Selected Course Pointer**

4 **Groundspeed/True Airspeed**

5 **Airplane symbol**

6 **VOR/ADF Selection/Ident or Frequency/VOR DME**
[Option - ADF}

7 **Current Heading**

8 **Magnetic/True Reference**

9 **Track Line**

10 **Localizer Deviation Indication and Scale**

11 **Reference ILS Frequency or Ident/Course/DME**

12 **Glideslope Pointer and Scale**

Copyright © The Boeing Company. See title page for details.

Navigation Displays – VOR Mode

Expanded and Center VOR Modes

[Option - Weather radar range arcs, ADF]

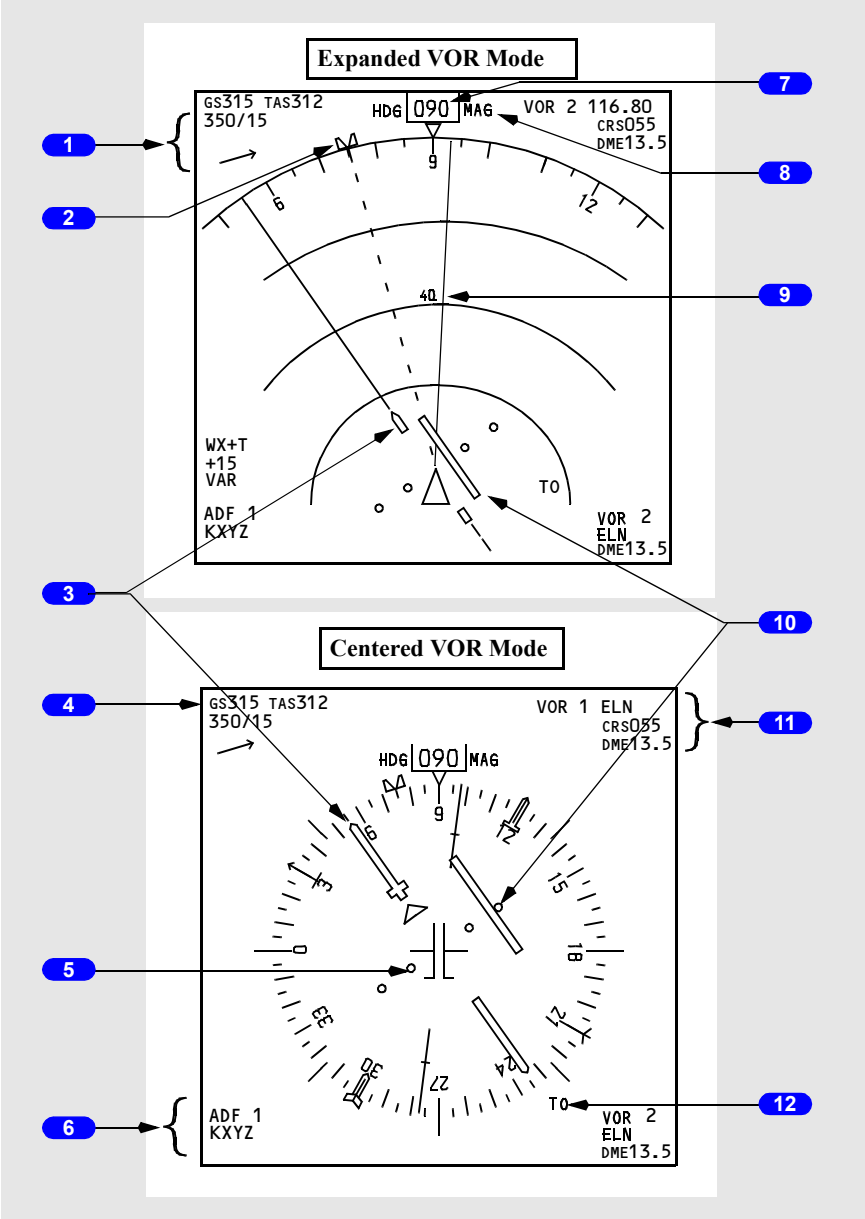

Copyright © The Boeing Company. See title page for details.

1 **Wind Direction/Speed/Arrow**

2 **Selected Heading Bug**

3 **Selected Course Pointer**

4 **Groundspeed/True Airspeed**

5 **Airplane symbol**

6 **VOR/ADF Selection/Ident or Frequency/VOR DME**
[Option - ADF]

7 **Current Heading**

8 **Magnetic/True Reference**

9 **Track Line**

10 **Course Deviation Indication and Scale**

11 **Reference VOR Receiver/Frequency or Ident/Course/DME**

12 **TO/FROM Indication and TO pointer**

Copyright © The Boeing Company. See title page for details.

Navigation Displays – Plan Mode

Plan Mode

[Option - Dual FMC]

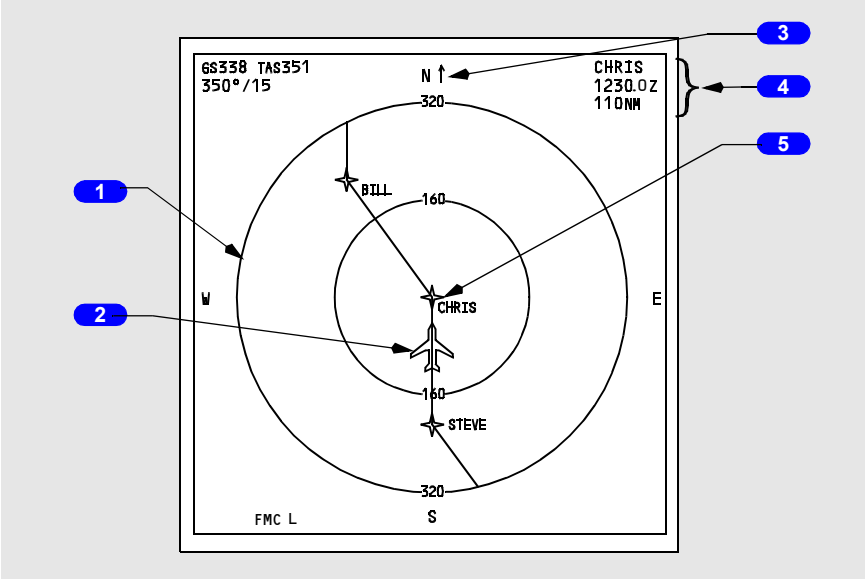

1 Range Circle

2 Airplane Symbol

3 True North Up Arrow

4 Active Waypoint Information

5 Center Waypoint

The waypoint located at the display center is identified as CTR on the CDU RTE LEGS page.

Copyright © The Boeing Company. See title page for details.

DO NOT USE FOR FLIGHT

Navigation Displays – Advisory Messages

Navigation Advisory Messages

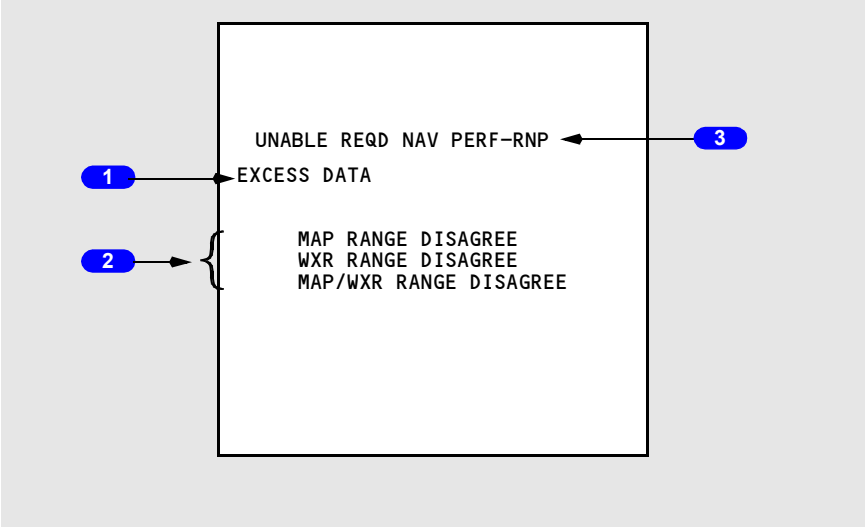

1 Excess Data Annunciation (amber)

The amount of map information sent to the primary display system is too great to display.

2 Range Disagreement Annunciations (amber)

MAP RANGE DISAGREE – Indicates selected range on the EFIS control panel is different than the MAP display range.

WXR RANGE DISAGREE – Indicates selected range on the EFIS control panel is different than the WXR display range.

MAP/WXR RANGE DISAGREE – Indicates selected range on the EFIS control panel is different than the MAP and WXR display ranges.

3 Nav Advisory Message (amber)

UNABLE REQD NAV PERF–RNP – Displayed in MAP or Center MAP during approach. Refer to Chapter 11 section 60, FMC Messages.

Copyright © The Boeing Company. See title page for details.

Mode/Frequency Disagree Annunciation

[Option - Track-up display, ADF]

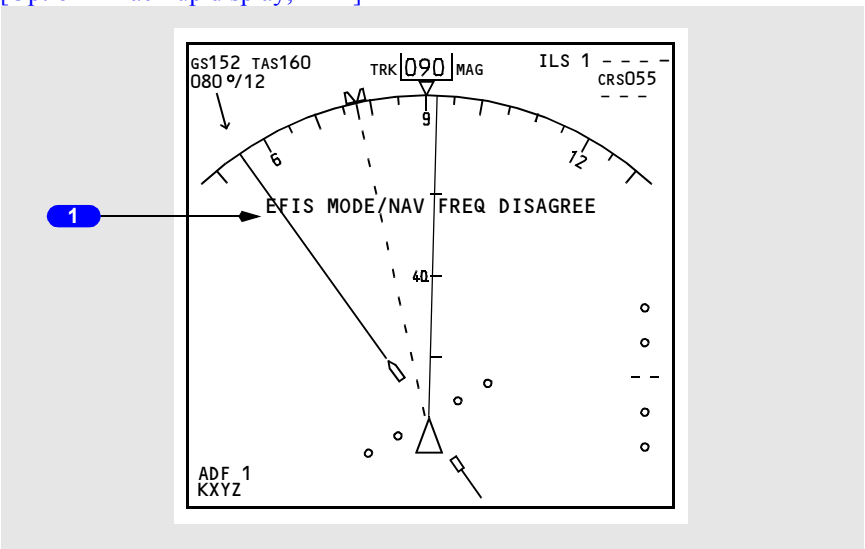

1 EFIS MODE/NAV FREQ DISAGREE (amber)

The ILS or VOR source annunciation corresponds to the position selected on the EFIS control panel and the tuned VOR/ILS frequency.

The annunciation is displayed:

- if APP is selected with a VOR frequency tuned
- if VOR is selected with an ILS frequency tuned.

The DME display and ILS/VOR frequency at the upper right corner display dashes.

The localizer deviation bar, VOR course deviation bar and glide slope pointer are not displayed.

The annunciation is displayed in the expanded APP, center APP, expanded VOR and center VOR modes.

Copyright © The Boeing Company. See title page for details.

DO NOT USE FOR FLIGHT

TCAS Messages

[Option - Track-up display, weather radar range arcs, dual FMC]

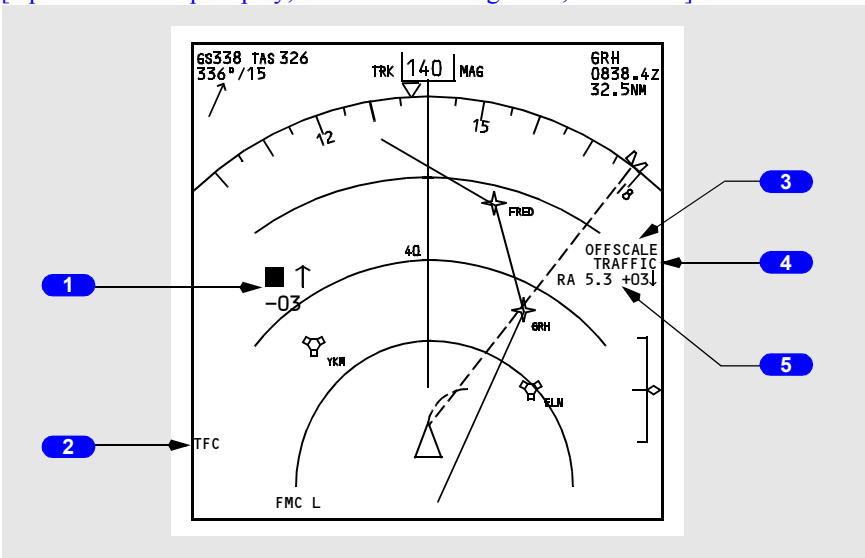

1 TCAS Traffic Symbols

Note: Refer to section 41 of this chapter for a detailed explanation of the traffic symbology.

Indicates position of traffic targets.

Displayed in expanded MAP, center MAP, expanded APP and expanded VOR modes and TFC is selected on the EFIS control panel.

2 TCAS Annunciations

TFC (cyan) – Indicates TFC selected on EFIS control panel in expanded MAP, center MAP, expanded APP and expanded VOR.

TCAS TEST (cyan) – TCAS in test mode.

TA ONLY (cyan) – TCAS TA mode only.

TCAS OFF (amber) – TCAS off.

3 Offscale (red or amber)

TA (amber) or RA (red) is beyond the selected display range and TFC is selected on the EFIS control panel.

Copyright © The Boeing Company. See title page for details.

4 Traffic (red or amber)

Displayed during a TA (amber) or RA (red) condition whether or not TFC is selected on the EFIS control panel.

5 No–Bearing Messages (red or amber)

Textual description of TA (amber) or RA (red) traffic with no associated bearing.

Message provides traffic type, range in NM, altitude and a vertical motion arrow.

A maximum of two messages can be displayed simultaneously.

TFC selected on the EFIS control panel.

Look-Ahead Terrain Messages (GPWS)

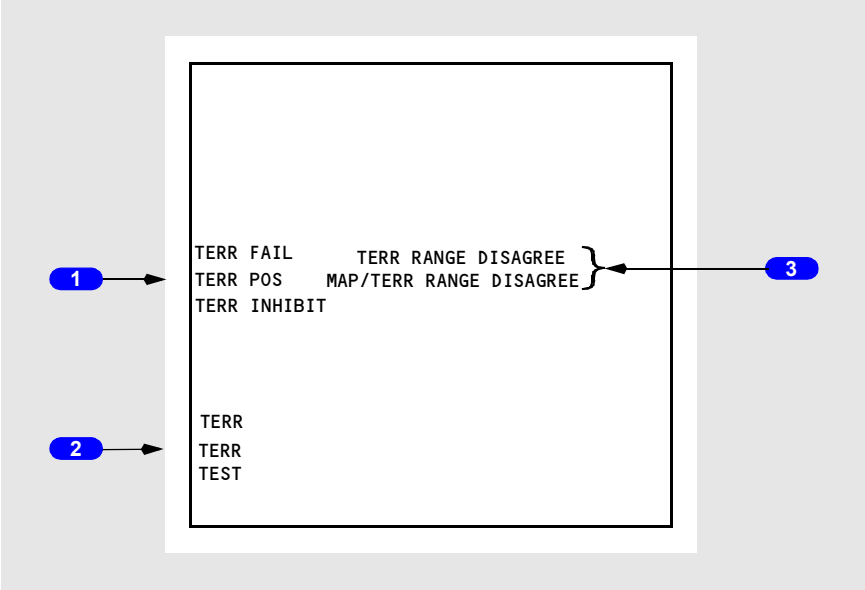

1 Terrain Status Annunciation (amber)

TERR FAIL – Look-ahead terrain alerting and display have failed.

TERR POSS – Look-ahead terrain alerting and display unavailable due to position uncertainty.

TERR INHIBIT – GPWS terrain inhibit switch in TERR INHIBIT position.

2 Terrain Mode Annunciation (cyan)

TERR – Terrain display enabled (manual or automatic display).

TERR TEST – GPWS is operating in self-test mode.

Copyright © The Boeing Company. See title page for details.

DO NOT USE FOR FLIGHT

3 Terrain Range Status Annunciation (amber)

TERR RANGE DISAGREE –

- terrain display enabled, and
- terrain output range disagrees with selected EFIS control panel range.

MAP/TERR RANGE DISAGREE –

- terrain display enabled, and
- terrain output range disagrees with selected EFIS control panel range, and
- map display output range disagrees with selected EFIS control panel range.

Predictive Windshear System (PWS) Message

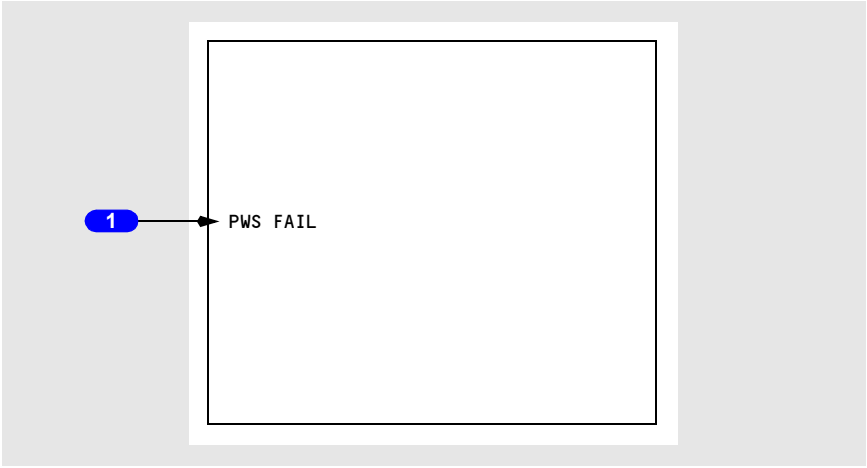

1 PWS FAIL Annunciation (amber)

Predictive windshear alerting and display have failed.

Copyright © The Boeing Company. See title page for details.

Navigation Displays – Failure Indications and Flags

Dashes replace numbers if there is no computed information. Failure flags replace symbols or failure messages are displayed, as appropriate.

Expanded MAP, Center MAP, Expanded APP, Expanded VOR Modes

[Option - Track-up display, dual ADF]

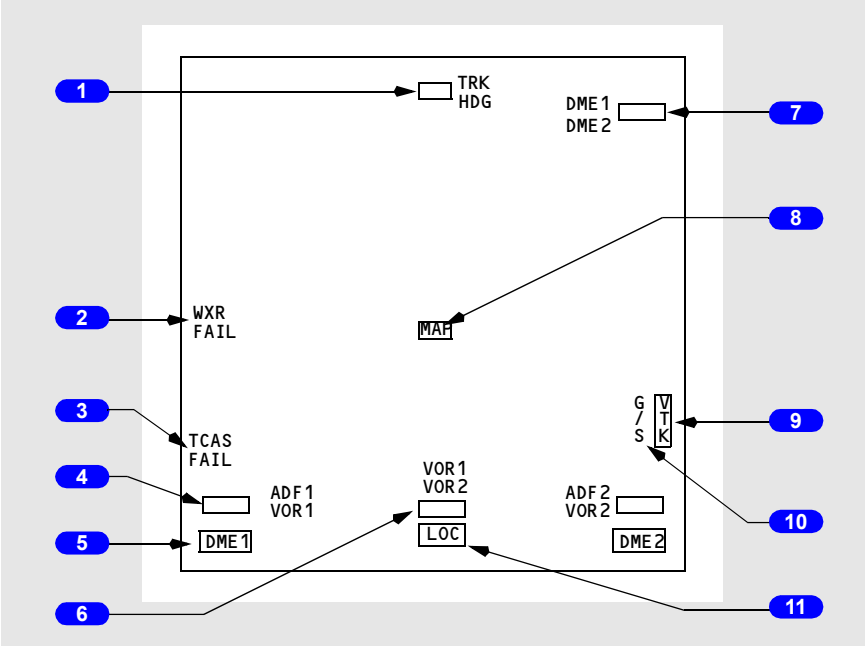

1 Track Failure Flag (expanded and center MAP modes)
[Option - Track-up display]

Track or heading display has failed.

2 Weather Radar Annunciations (expanded and center MAP, expanded APP, expanded VOR modes)

WXR FAIL – Weather radar has failed. No weather data are displayed.

WXR WEAK – Weather radar calibration fault.

WXR ATT – Attitude stabilization for antenna has been lost.

WXR STAB – Antenna stabilization is off.

WXR DSP – Range data input has failed. Only displayed in WXR TEST

Copyright © The Boeing Company. See title page for details.

3 TCAS Failure Flag (expanded and center MAP, expanded VOR, expanded APP, PLAN modes)

TCAS has failed.

4 ADF 1 and ADF 2 or VOR 1 and VOR 2 Failure Flag (expanded and center MAP, expanded APP, expanded VOR modes)
[Option - Dual ADF]

ADF or VOR display has failed.

5 DME 1 and DME 2 Failure Flag (expanded and center MAP, expanded APP, expanded VOR modes)

Selected VOR DME display has failed.

6 VOR 1, 2 Failure Flag (expanded VOR mode)

VOR display has failed.

7 Reference VOR DME (expanded VOR mode) and Reference ILS DME (expanded APP mode)

Reference VOR or ILS DME display has failed.

8 MAP Failure Flag (expanded and center MAP, PLAN modes)

The related FMC generated map display has failed.

9 Vertical Track Failure Flag (expanded and center MAP modes)

FMC vertical track data are invalid.

10 ILS Glideslope Failure Flag (expanded APP mode)

ILS glideslope display has failed.

11 ILS Localizer Failure Flag (expanded APP mode)

ILS localizer display has failed.

Copyright © The Boeing Company. See title page for details.

ND Failure Flags – Center APP and Center VOR Modes

[Option - Dual ADF]

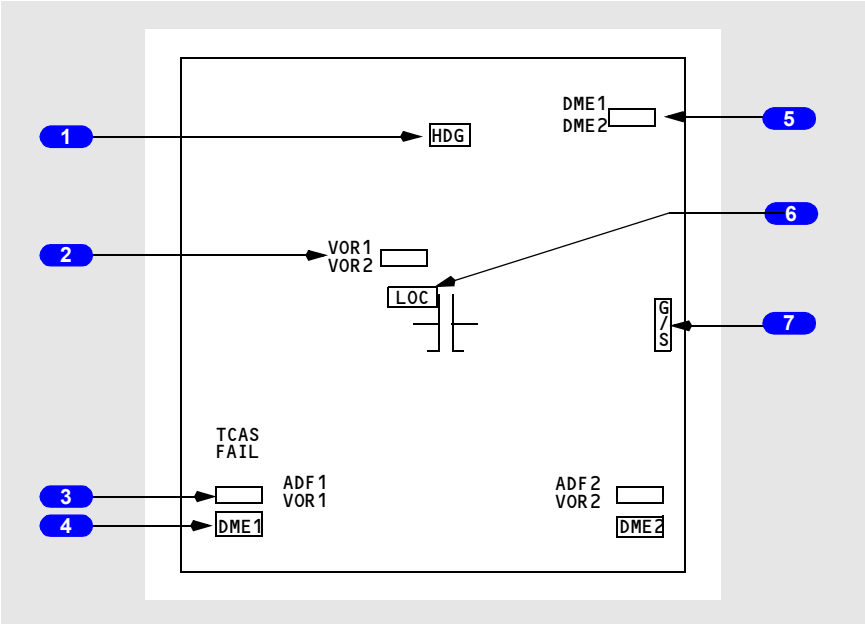

1 Heading Failure Flag (center APP, center VOR modes)

Heading display has failed.

2 VOR Failure Flag (center VOR mode)

VOR display has failed.

3 ADF 1 and ADF 2 or VOR 1 and VOR 2 Failure Flag (center APP, center VOR modes)
[Option - Dual ADF]

VOR or ADF display has failed.

4 DME 1 and DME 2 Failure Flag (center APP, center VOR modes)

Selected VOR DME display has failed.

5 Reference VOR DME (center VOR mode) and Reference ILS DME (center APP mode)

Reference VOR or ILS DME display has failed.

Copyright © The Boeing Company. See title page for details.

6 ILS Localizer Failure Flag (center APP mode)

ILS localizer display has failed.

7 ILS Glideslope Failure Flag (center APP mode)

ILS glide slope display has failed.

Copyright © The Boeing Company. See title page for details.

System Components

[Option - Model 2350 with 3-light first officer panel]

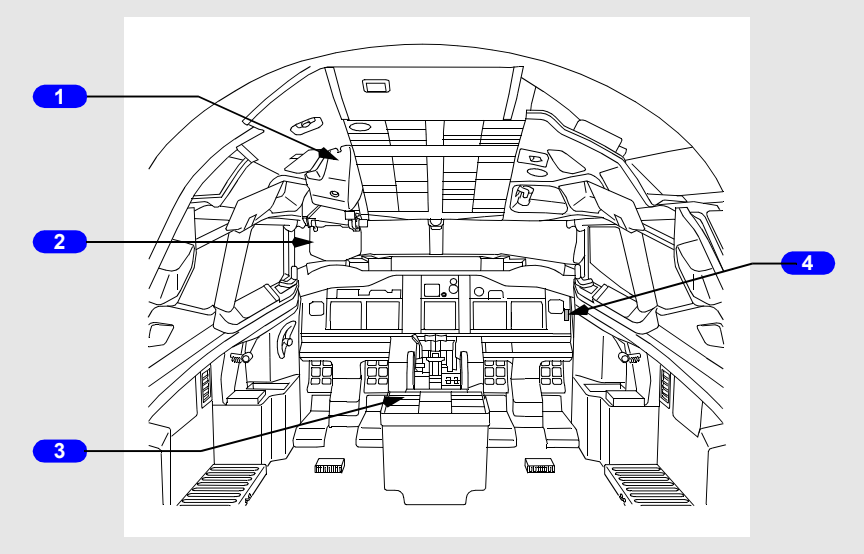

1 Overhead Unit

Contains the CRT and projection optics to display the symbolic image on the combiner.

2 Combiner

Combines displayed flight symbology with the pilot's view through window No. 1.

3 Control Panel

Used for data entry and to select modes of operation.

4 Annunciator

Provides system status and warning annunciations during a CAT III approach.

Copyright © The Boeing Company. See title page for details.

Combiner Display

The combiner displays symbology and fault indications for the HUD system. Display modes of operation include:

- Primary (PRI)
- AIII approach
- Instrument Meteorological Conditions (IMC) approach
- Visual Meteorological Conditions (VMC) approach

Typical display modes are shown below.

Note: Not all symbols are represented in this section. Refer to Section 10-42, Head-Up Display System, Symbology, for a complete listing of HUD system symbology.

Primary (PRI) Mode Display

[Option - Model 2350]

The primary mode can be used for all phases of flight from takeoff to landing including low visibility takeoff operations.

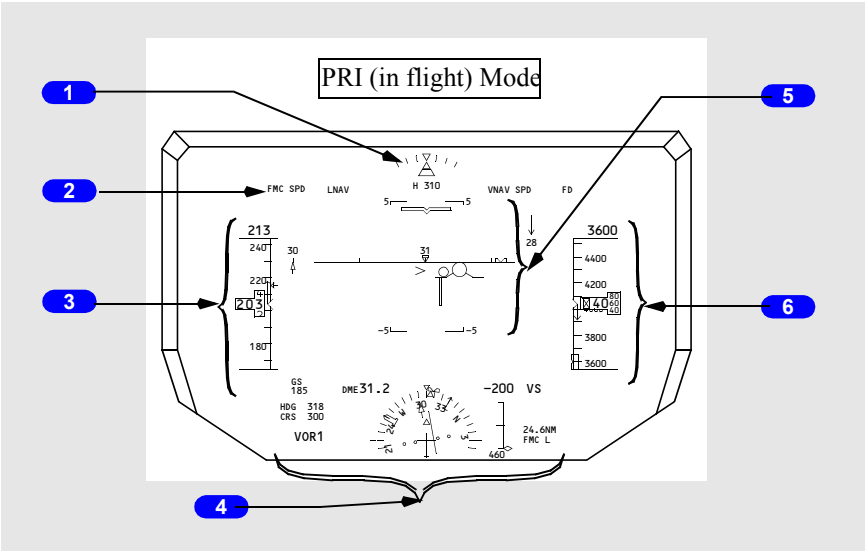

Copyright © The Boeing Company. See title page for details.

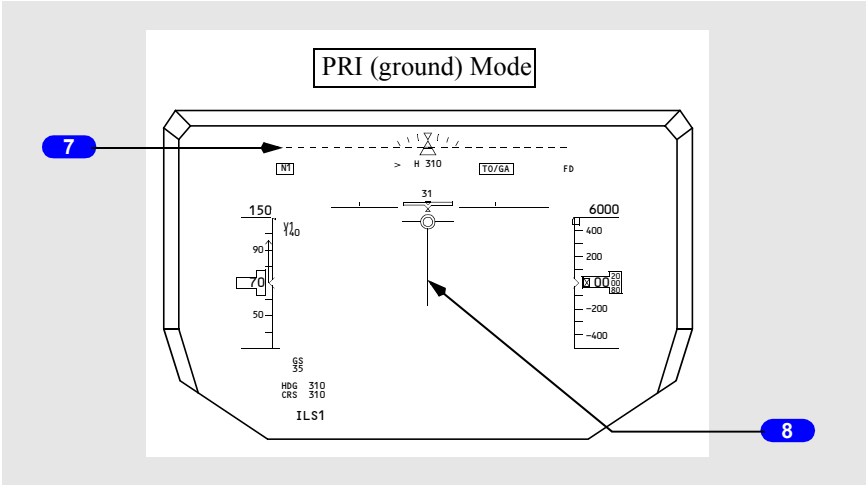

1 Bank Scale and Pointer

2 Flight Mode Annunciations (FMAs)

Refer to Chapter 4, Automatic Flight.

3 Airspeed Indications

4 Navigation Indications

5 Attitude Indications

6 Altitude Indications

7 TO/GA Pitch Target Line

8 Ground Localizer Line

Copyright © The Boeing Company. See title page for details.

Airspeed Indications - General

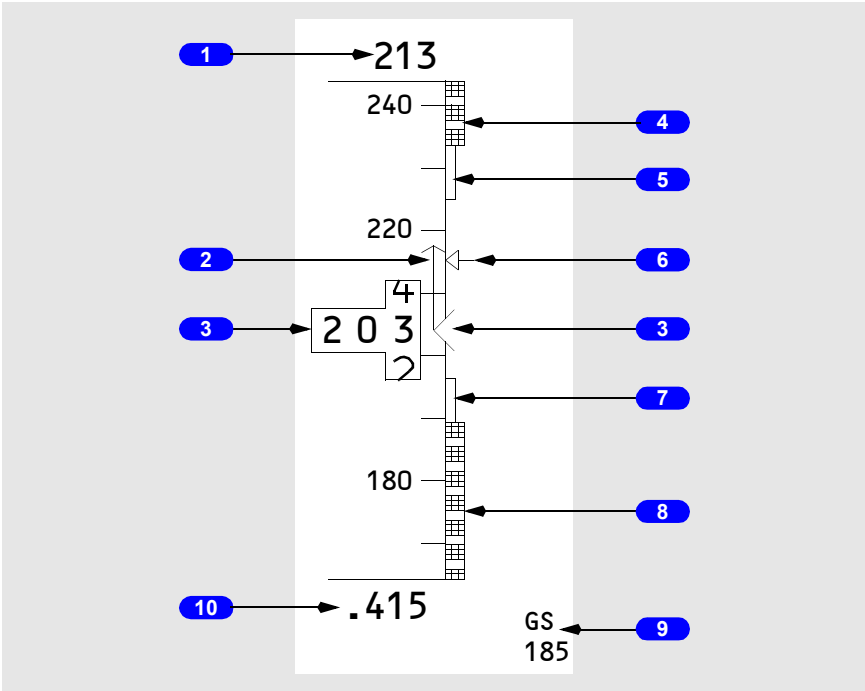

1 Selected Speed (all modes)

Displays target airspeed:

- manually selected in the IAS/MACH window
- indicates the FMC computed airspeed when the IAS/MACH window is blank.

2 Speed Trend Vector (PRI in flight, PRI ground modes)

Tip of arrow indicates predicted airspeed in the next 10 seconds based on the current airspeed and acceleration.

3 Computed Airspeed (PRI in flight, PRI ground modes)

Indicates current computed airspeed in knots.

Displayed relative to a vertical scale along the edge of the tape and as a digital value.

Copyright © The Boeing Company. See title page for details.

4 Maximum Speed (PRI in flight mode)

Bottom of bar indicates the maximum speed as limited by the lowest of the following:

- Vmo/Mmo
- landing gear placard speed
- flap placard speed.

Inhibited on the ground.

5 Maximum Maneuvering Speed (PRI in flight mode)

At high altitudes and flaps up, the bottom of the bar indicates the airspeed that provides a 0.3 g maneuver margin to high speed buffet. May be displayed at high altitude with flaps up, at relatively high gross weights.

When flaps are not up, bottom of the bar indicates flap limit placard speed for the next normal flap setting. The display logic is based on a normal flap setting sequence of 1, 5, 15, 30. The bar is removed when the flap lever is moved to the landing flap selected on the APPROACH REF page or when the flap lever is moved to flaps 30 or 40.

6 Speed Bug (PRI in flight, PRI ground modes)

Points to the airspeed:

- manually selected in the IAS/MACH window
- indicates the FMC computed airspeed when the IAS/MACH window is blank.

When the selected speed is off scale, the bug is parked at the top or bottom of the tape, with only one half bug visible.

7 Minimum Maneuver Speed (PRI in flight, PRI ground modes)

Top of bar indicates minimum maneuver speed.

8 Minimum Speed (PRI in flight mode)

Top of bar indicates the speed at which stick shaker occurs.

Inhibited on the ground.

9 Ground Speed (all modes)

Indicates current ground speed in one knot increments.

Copyright © The Boeing Company. See title page for details.

10 Mach Speed (PRI in flight)

Indicates current mach speed when mach increases above .400 and removed when mach decreases below .380.

Note: In other than the PRI mode, the airspeed scale and associated symbols are replace with a digital readout. The readout is positioned relative to the flight path vector. If the flight path vector is not displayed, the readout is positioned relative to the airplane reference symbol.

Airspeed Indications - Takeoff and Approach

[Option - 100 knot airspeed bug]

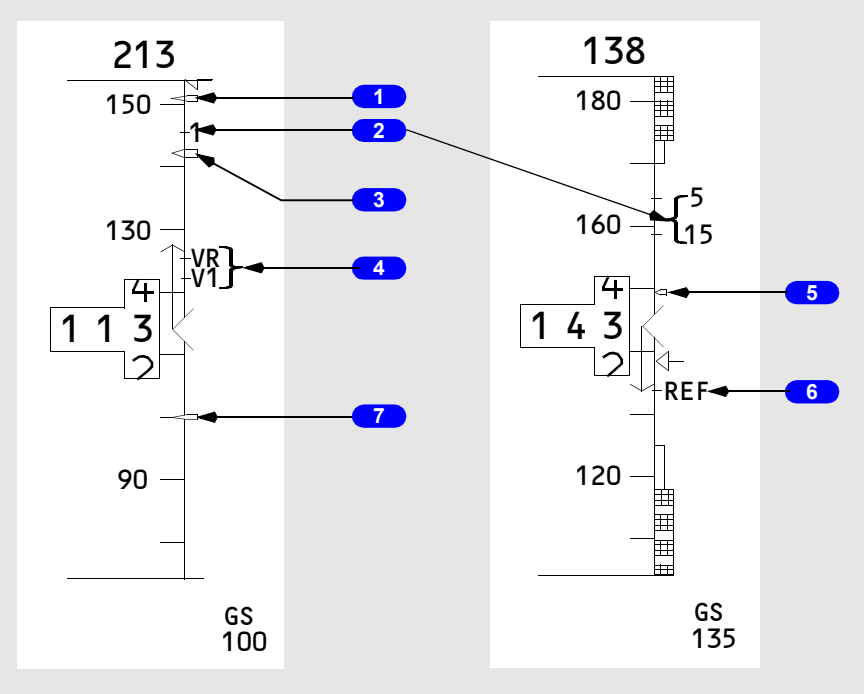

1 Bug 5 (PRI in flight, PRI ground modes)

Displayed if speed reference selector on the engine display control panel is in the bug 5 position or SET position and a value greater than 60 knots has been selected. Not available if the speed reference selector is in the AUTO position.

2 Flaps Maneuvering Speeds (PRI in flight mode)

Indicates flap maneuvering speed for the displayed flap position.

Copyright © The Boeing Company. See title page for details.

3 V2+15 (PRI in flight mode)

Displayed for takeoff.

Removed when either of the following occurs:

- at first flap retraction
- when VREF is entered in the CDU.

4 Takeoff Reference Speeds (PRI ground mode)

Indicates V1 (decision speed) and VR (rotation speed) as selected on the CDU TAKEOFF REF page (refer to Chapter 11, Flight Management, Navigation) or as set with the speed reference selector on the engine display control panel.

5 VREF+15 (PRI in flight, PRI ground modes)

Displayed after selection of VREF.

6 Landing Reference Speed (PRI in flight, PRI ground modes)

Indicates REF (reference speed) as selected on the CDU APPROACH REF page (refer to Chapter 11, Flight Management, Navigation) or as set with the speed reference selector on the engine display control panel.

7 100 Knot Airspeed Bug (PRI in flight, PRI ground modes) [Option - 100 knot airspeed bug]

Indicates 100 knots:

- displayed automatically during preflight
- removed at first flap retraction or when VREF is entered.

Copyright © The Boeing Company. See title page for details.

Altitude Indications

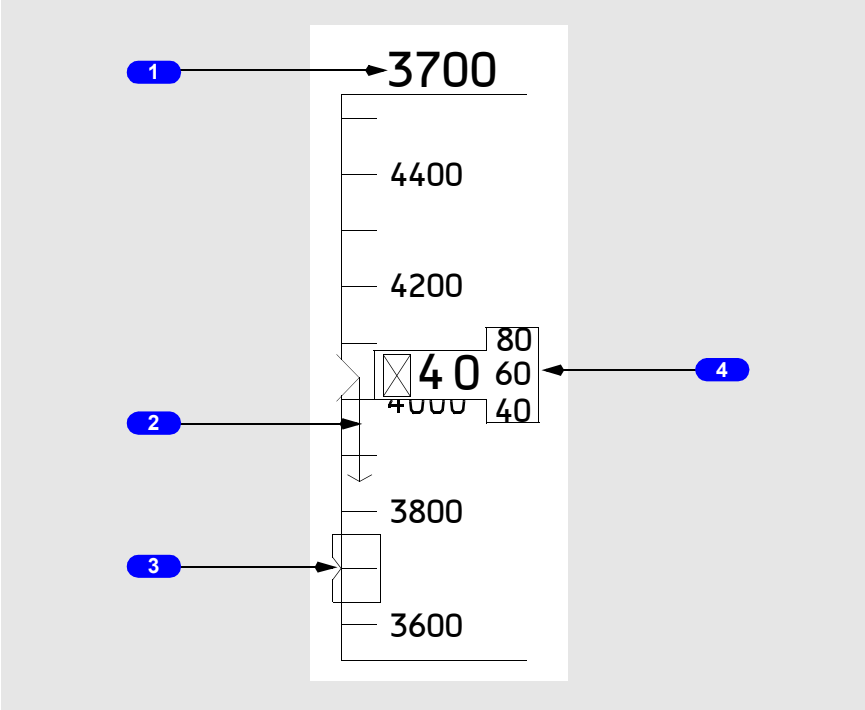

1 Selected Altitude (PRI in flight, PRI ground modes)

Indicates the altitude set in the MCP altitude window.

2 Altitude Trend Vector (PRI in flight mode)

Tip of arrow indicates predicted altitude in the next 6 seconds based on the current vertical speed.

3 Selected Altitude Bug (PRI in flight, PRI ground modes)

Points to the altitude set in the MCP altitude window.

When the selected altitude is off scale, the bug is parked at the top or bottom of the tape, with only one half bug visible.

4 Current Altitude (PRI in flight, PRI ground modes)

Indicates current altitude in increments of thousands, hundreds and twenty feet.

Copyright © The Boeing Company. See title page for details.

For positive values of altitude below 10,000 feet, an “X” symbol is displayed.

Note: In other than the PRI mode, the altitude scale and associated symbols are replaced with a digital readout. The readout is positioned relative to the flight path vector. If the flight path vector is not displayed, the readout is positioned relative to the airplane reference symbol.

Approach Mode Displays

[Option - Model 2350]

Refer to section 42 for symbology descriptions.

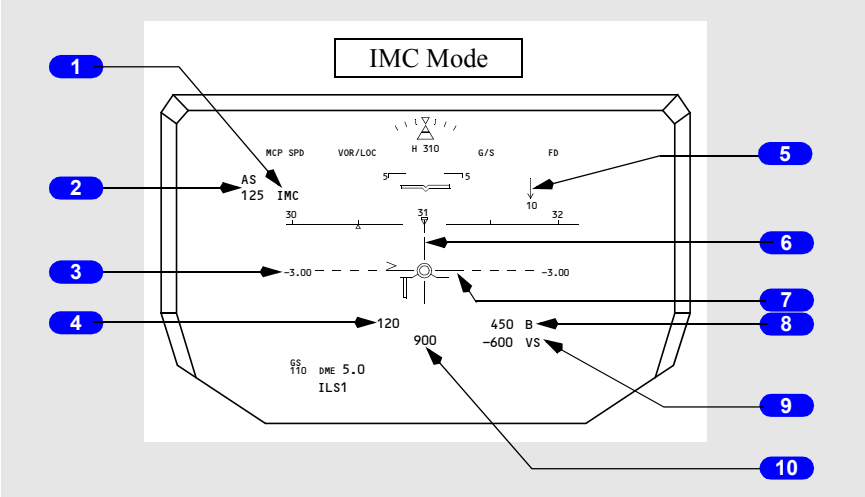

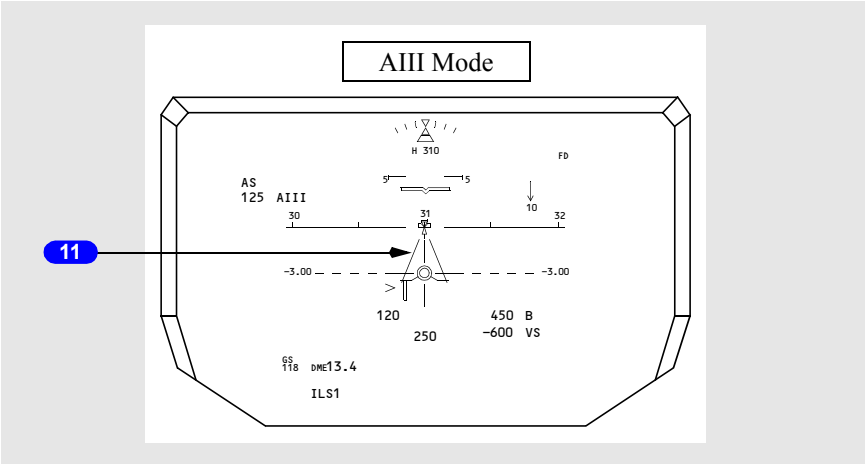

Copyright © The Boeing Company. See title page for details.

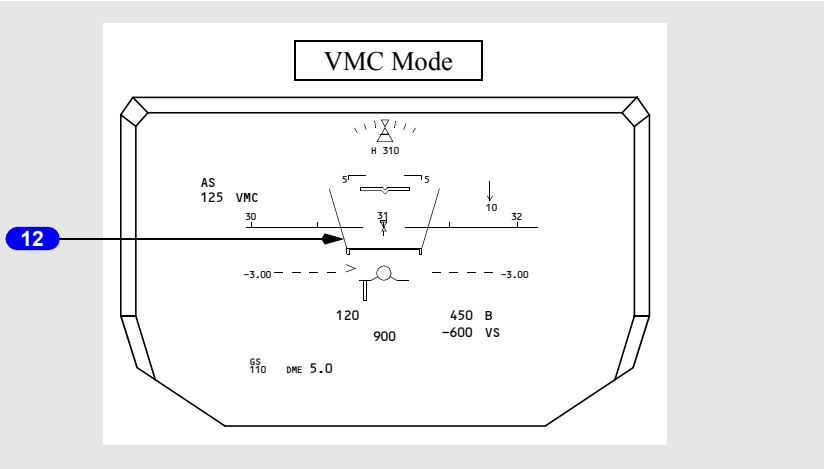

1 **Mode/Status**

2 **Digital Selected Airspeed**

3 **Glideslope Reference Line**

4 **Digital Airspeed**

5 **Wind Indications**

6 **Lateral Deviation Line**

7 **Glideslope Deviation Line**

8 **Digital Barometric Altitude**

9 **Digital Vertical Speed**

10 **Radio Altitude**

11 **Runway Edge Lines**

12 **TCAS Resolution Advisory**

Copyright © The Boeing Company. See title page for details.

Failure Indications and Flags

Dashes replace numbers if there is no computed information. Failure flags replace symbols or failure messages are displayed, as appropriate.

Data source flags are provided in a few cases to annunciate the source of displayed data when other than normal.

[Option - Model 2350]

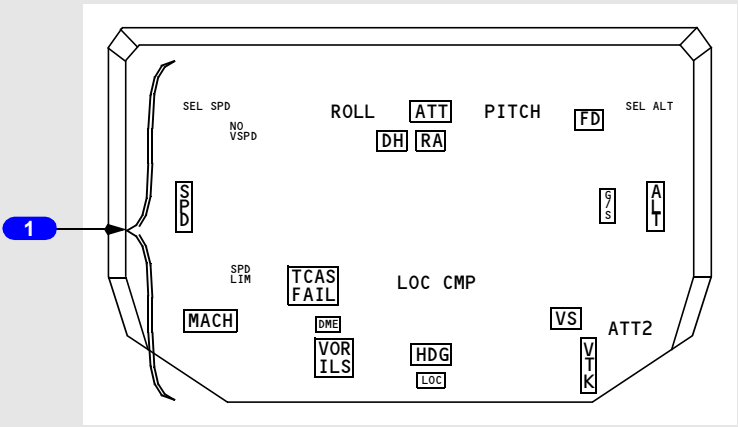

1 HUD System Failure Indications and Flags

See section 42 for detailed information on the HUD system failure indications and flags.

Control Panel Display

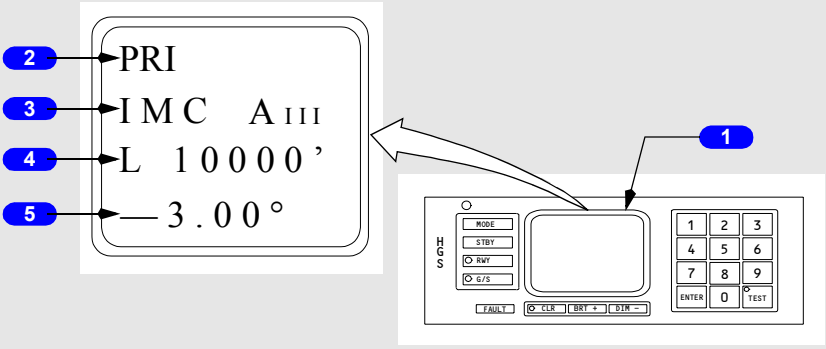

AFT ELECTRONIC PANEL

Copyright © The Boeing Company. See title page for details.

1 Control Panel Display Window

Displays selected modes, entered values, system test and system status.

2 Mode Display Line

Displays current mode:

- PRI - primary flight mode
- AIII - Cat III approach mode
- IMC - instrument meteorological conditions approach mode
- VMC - visual meteorological conditions approach mode
- NO AIII - AIII capability lost
- CLR - combiner display cleared.

3 Standby Mode Display Line

Displays standby mode:

- PRI - primary flight mode
- AIII - Cat III approach mode
- IMC - instrument meteorological conditions approach
- VMC - visual meteorological conditions approach.

[Option - Model 2350]

When available, AIII capability status is displayed adjacent to the standby mode. “AIII” changes to “AIII” and moves to the standby mode once all conditions have been met to conduct an AIII mode approach. Pressing the mode key then activates the AIII mode.

4 Runway Length/Elevation Line

Displays runway length or elevation:

- L XXXXX - valid entry is 0 to 99999 feet, however, entries between 7500 and 13500 feet are required to display ground roll guidance for low visibility takeoff operations.
- E XXXXX - valid entry is -9999 to 99999 feet.

5 Reference Glideslope Line

Displays runway glideslope:

- valid entry is 0.00° to -9.99°.
- entered values are required to be between -2.51° and -3.00° for AIII approach operations.

Copyright © The Boeing Company. See title page for details.

EFIS Control Panel (EFIS/Map Display)

The left EFIS control panel controls the Captain outboard and inboard display units. The right EFIS control panel controls the First Officer outboard and inboard display units.

EFIS Control Panel Controls – Flight Instrument Displays

[Option - Flight path vector, dual ADF

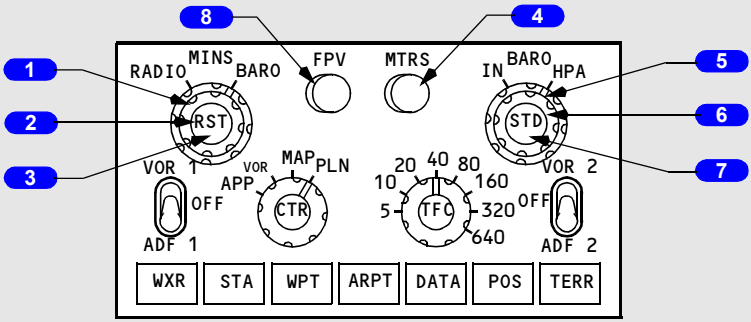

GLARESHIELD

1 Minimums (MINS) Reference Selector (outer) (two position)

RADIO – selects radio altitude as the minimums reference.

BARO – selects barometric altitude as the minimums reference.

2 Minimums (MINS) Selector (middle) (slew)

ROTATE – adjusts the radio or baro minimums altitude.

3 Minimums (MINS) Reset (RST) Switch (inner) (momentary action)

PUSH –

- blanks radio height ALT alert
- resets the radio altitude minimums alert display on the attitude indicator
- blanks the reference altitude marker on the altimeter if displayed; sets the reference altitude marker to zero if not previously displayed.

Copyright © The Boeing Company. See title page for details.

4 Meters (MTRS) Switch (momentary action)

PUSH – displays altitude indications in meters. Not available in compact display format.

5 Barometric (BARO) Reference Selector (outer) (two position)

IN – selects inches of mercury as the barometric altitude reference.

HPA – selects hectopascals as the barometric altitude reference.

6 Barometric (BARO) Selector (middle) (slew)

ROTATE – adjusts the barometric altitude setting on the altimeter.

7 Barometric (BARO) Standard (STD) Switch (inner) (momentary action)

PUSH – selects the standard barometric setting (29.92 inches Hg/1013 HPA) for barometric altitude reference.

8 Flight Path Vector (FPV) Switch (momentary action)
[Option - Flight path vector]

PUSH – displays flight path vector on the attitude indicator.

EFIS Control Panel Controls – Navigation Displays

[Option - Dual ADF, flight path vector]

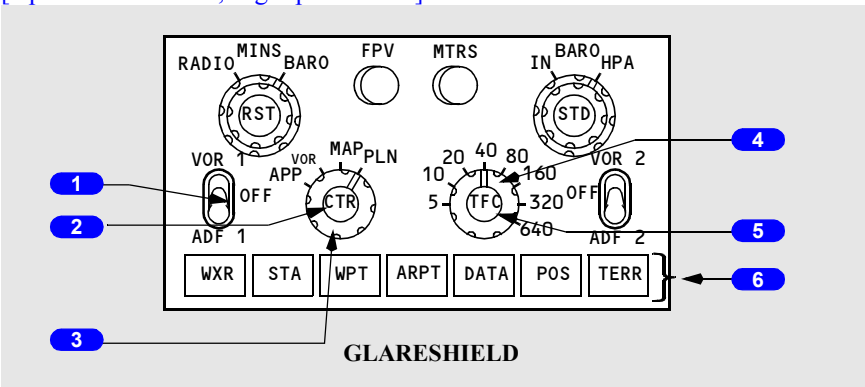

1 VOR/ADF Switch (three position)

Displays VOR or ADF information on the respective RDMI.

VOR – displays the selected VOR bearing pointer and VOR bearing pointer source indicator.

Copyright © The Boeing Company. See title page for details.

OFF – removes the VOR or ADF displays and displays “OFF” in place of the bearing pointer source indicators.

ADF – displays the selected ADF pointer and ADF bearing pointer source indicator.

2 Mode Selector (outer)

Selects the desired display.

APP –

- displays localizer and glideslope information in heading–up format
- displays reference ILS receiver, ILS frequency, course and DME
- weather radar and TCAS are not displayed in center APP mode.

VOR –

- displays VOR navigation information in heading–up format
- displays reference VOR receiver, VOR frequency, course, DME and TO/FROM information
- weather radar and TCAS are not displayed in center VOR mode.

MAP –

[Option - Heading-up display]

- displays FMC generated route and MAP information, airplane position, heading and track, in a heading–up format
- displays waypoints, including the active waypoint, within the selected range
- displays VNAV path deviation.

PLN –

- displays a non–moving, true north up, route depiction
- the airplane symbol represents actual airplane position
- allows route step–through using the CDU LEGS page
- weather radar and TCAS are not displayed.

3 Center (CTR) Switch (inner)

PUSH –

- displays the full compass rose (center) for APP, VOR and MAP modes
- subsequent pushes alternate between expanded and center displays.

4 Range Selector (outer)

Selects desired display range in nautical miles for APP, VOR, MAP or PLN mode.

5 Traffic (TFC) Switch (inner)

PUSH – displays TCAS information (refer to Chapter 15, Warning Systems).

Copyright © The Boeing Company. See title page for details.

6 MAP Switches (momentary action)

The MAP switches:

- add background data/symbols to MAP and center MAP modes
- displays can be selected simultaneously
- second push removes the information.

WXR (weather radar) – energizes weather radar transmitter and displays weather radar returns in MAP, center MAP, expanded VOR and expanded APP modes. When the 640 nm range is selected, weather radar returns are limited to 320 nm (refer to Chapter 11, Flight Management, Navigation).

STA (station) –

- displays all FMC data base navigation aids if on map scales 5, 10, 20 or 40 nm.
- displays FMC data base high altitude navigation aids on map scales 80, 160, 320 or 640 nm.

WPT (waypoint) – displays the waypoints in the FMC data base which are not in the flight plan route if the selected range is 40 nm or less.

ARPT (airport) – displays all airports which are stored in the FMC data base and which are within the viewable map area.

DATA – displays altitude constraint, if applicable, and estimated time of arrival for each active route waypoint.

POS (position) – displays VOR and ADF bearing vectors extended from the nose of the airplane symbol to the stations.

TERR (terrain) – displays GPWS generated terrain data in MAP, center MAP, VOR, and APP modes (refer to Chapter 15, Warning Systems).

Displays Source Panel

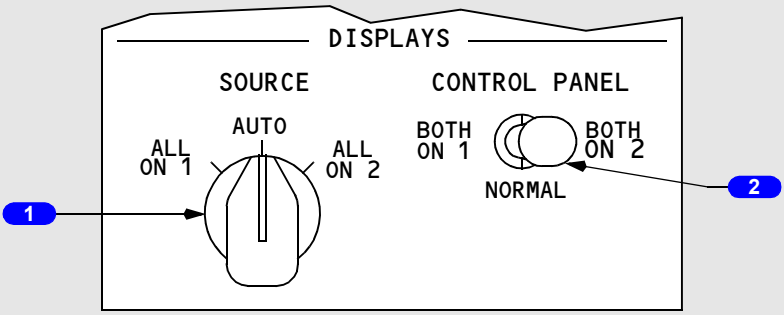

FORWARD OVERHEAD PANEL

Copyright © The Boeing Company. See title page for details.

1 DISPLAYS SOURCE Selector

AUTO – DEU 1 controls the Captain outboard, Captain inboard, and the upper display units; DEU 2 controls the First Officer outboard, First Officer inboard, and the lower display units. When a DEU fails, the other DEU controls all display units.

ALL ON 1/ALL ON 2 – provides a means of manually switching to a single DEU as the source of information for all six display units.

Note: Used on the ground for maintenance purposes.

2 CONTROL PANEL Select Switch

NORMAL – the left EFIS control panel controls the Captain's displays and the right EFIS control panel controls the First Officer's displays.

BOTH ON 1/BOTH ON 2 – provides a means of manually switching control of the Captain's and First Officer's displays to a single EFIS control panel.

Display Select Panels

[Option - Side by side display]

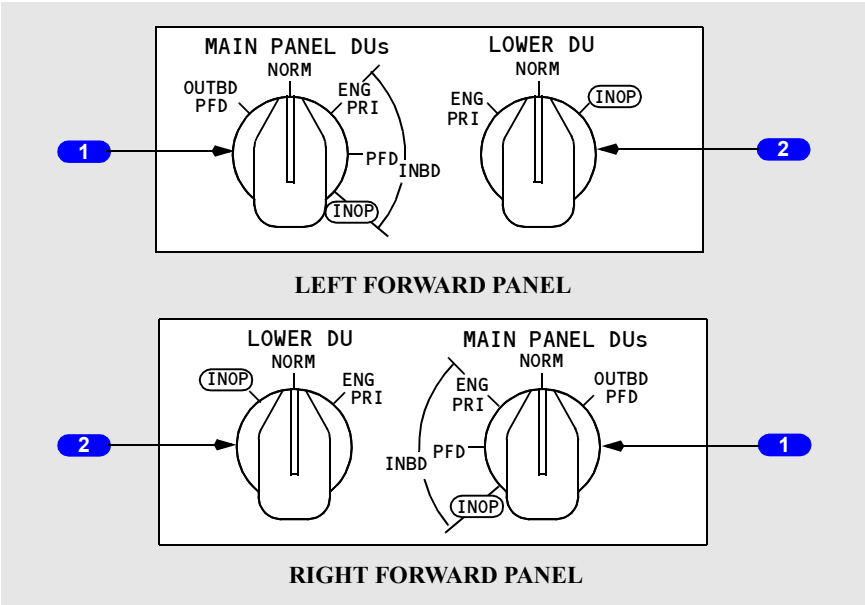

Copyright © The Boeing Company. See title page for details.

1 Main Panel Display Units (MAIN PANEL DUs) Selector

Selects what is displayed on the respective outboard and inboard display units:

- Outboard Primary Flight Display (OUTBD PFD) – displays the compact EFIS format on the outboard display unit and blanks the inboard display unit.
- Normal (NORM) – displays normal EFIS and MAP displays on the outboard and inboard display units; provides automatic display switching if a display unit fails.
- Inboard Engine Primary (INBD ENG PRI) – displays the engine display on the inboard display unit and the compact EFIS format on the outboard display unit.
- Inboard Primary Flight Display (INBD PFD) – displays the compact EFIS format on the inboard display unit and blanks the outboard display unit.

2 Lower Display Unit (LOWER DU) Selector

Selects what is displayed on the lower display unit:

- Engine Primary (ENG PRI) – displays the engine display on the lower display unit and blanks the upper display unit.
- Normal (NORM) – displays the engine display on the upper display unit and no display on the lower display unit; provides automatic display switching to the lower display unit if the upper display unit fails.

Speed Reference Selector

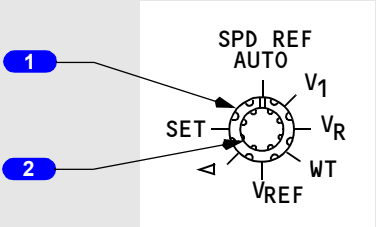

CENTER FORWARD PANEL

1 Speed Reference Selector (outer)

Sets the reference airspeed bugs on the Mach/airspeed indicator:

- AUTO – the reference airspeeds and gross weight are provided automatically through the FMC
- V1 – used to manually set decision speed on the ground; in flight, displays “INVALID ENTRY”

Copyright © The Boeing Company. See title page for details.

- VR – used to manually set rotation speed on the ground; in flight, displays "INVALID ENTRY"
- WT – allows manual entry of reference gross weight
- VREF – used to manually set the landing reference speed in flight; on the ground, displays "INVALID ENTRY"
- Bug 5 – used to manually set the white bug 5 to the desired value
- SET – removes the digital readout above the Mach/airspeed indicator.

2 Speed Reference Selector (inner) (two speed slew)

ROTATE –

- manually sets the appropriate reference airspeed or gross weight
- the digital display appears above the Mach/airspeed indicator.

Display Brightness Controls

Captain Brightness Controls

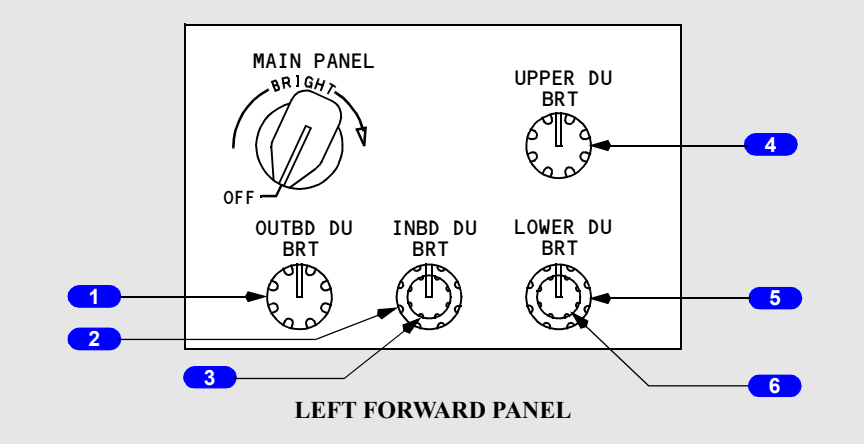

1 Outboard Display Unit Brightness (OUTBD DU BRT) Control (rotary)

ROTATE – adjusts the brightness of the Captain outboard display unit.

2 Inboard Display Unit Brightness (INBD DU BRT) Control (outer) (rotary)

ROTATE – adjusts the brightness of the Captain inboard display unit.

Copyright © The Boeing Company. See title page for details.

3 Inboard Display Unit Radar Brightness (INBD DU BRT) Control (inner) (rotary)

ROTATE – adjusts weather radar and terrain display brightness on the Captain inboard display unit.

4 Upper Display Unit Brightness (UPPER DU BRT) Control (rotary)

ROTATE – adjusts the brightness of the upper display unit.

5 Lower Display Unit Brightness (LOWER DU BRT) Control (outer) (rotary)

ROTATE – adjusts the brightness of the lower display unit.

6 Lower Display Unit Brightness (LOWER DU BRT) Control (inner) (rotary)

Inoperative.

First Officer Brightness Controls

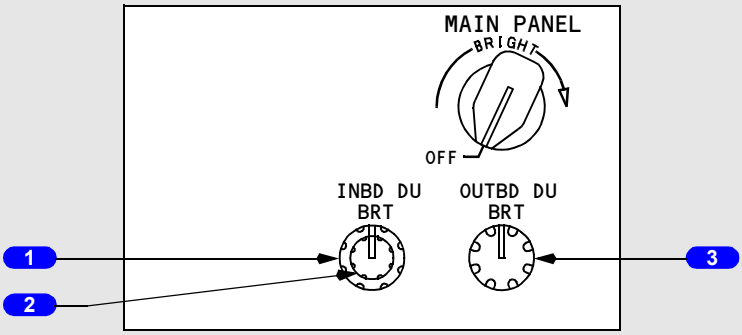

RIGHT FORWARD PANEL

1 Inboard Display Unit Brightness (INBD DU BRT) Control (outer) (rotary)

ROTATE – adjusts the brightness of the First Officer inboard display unit.

2 Inboard Display Unit Radar Brightness (INBD DU BRT) Control (inner) (rotary)

ROTATE – adjusts weather radar and terrain display brightness on the First Officer inboard display unit.

Copyright © The Boeing Company. See title page for details.

3 Outboard Display Unit Brightness (OUTBD DU BRT) Control (rotary)

ROTATE – adjusts the brightness of the First Officer outboard display unit.

Copyright © The Boeing Company. See title page for details.

Standby Flight Instruments

The standby flight instruments include the:

- standby magnetic compass
- integrated standby flight display
- standby radio magnetic indicator.

Standby Magnetic Compass

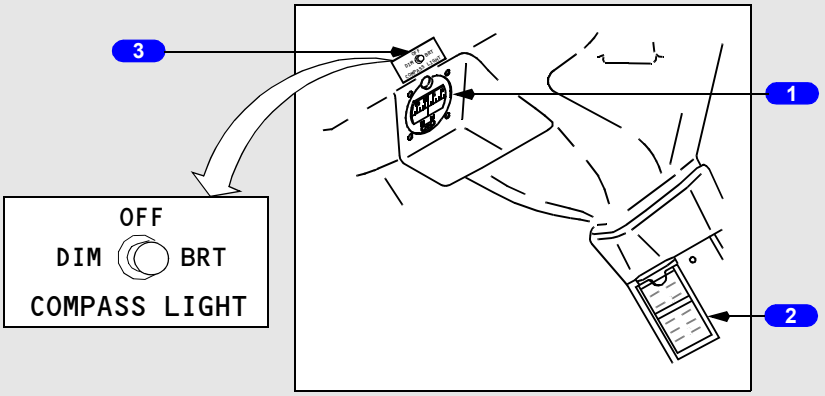

CENTER POST ABOVE GLARESHIELD

1 Standby Magnetic Compass

Displays magnetic heading.

2 Standby Magnetic Compass Correction Card

Provides appropriate heading corrections.

3 Compass Light Switch

OFF – compass light is extinguished.

BRT – sets compass light to full brightness.

DIM – sets compass light to low brightness.

Copyright © The Boeing Company. See title page for details.

Integrated Standby Flight Display

[Option - Sextant S231A120-1]

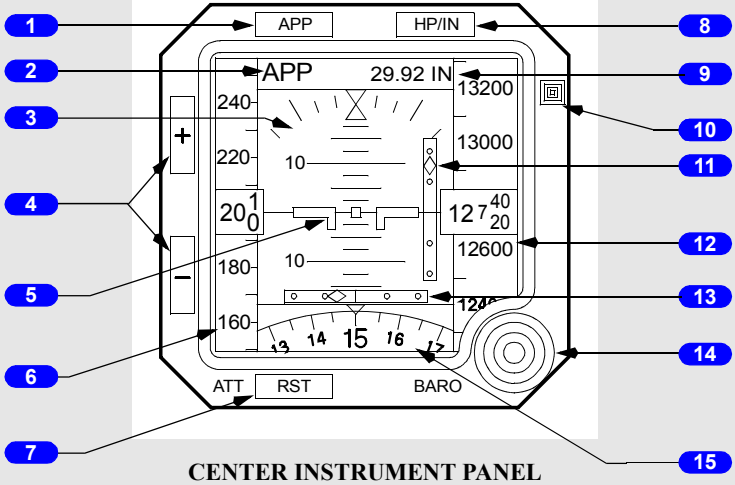

CENTER INSTRUMENT PANEL

1 Approach (APP) Switch

Push – selects approach mode.

2 Approach Mode Annunciation

Indicates approach mode selected.

- Blank – no approach deviation data displayed
- APP – ILS localizer and glideslope deviation data displayed
- BCRS (Back course) – reverses sensing for localizer pointer during back course approaches

3 Attitude Display

Displays airplane attitude.

- Indicates bank in reference to the bank scale
- Indicates the horizon relative to the airplane symbol
- Beyond 30 degrees pitch, large red arrowheads (V-shaped) indicate the attitude has become excessive, and the direction to the horizon line.

Copyright © The Boeing Company. See title page for details.

4 Display Brightness Switches

Push –

- + increases display brightness
- - decreases display brightness

5 Airplane Symbol

Indicates airplane attitude with reference to the horizon.

6 Airspeed Indications

Indicates current airspeed when above 30 knots.

7 Attitude Reset (ATT RST) Switch

Push and hold at least two seconds

- aligns horizon with the airplane symbol
- reset takes approximately ten seconds

8 Hectopascal/Inch (HP/IN) Switch

Push – changes the units of the barometric reference.

9 Barometric Setting

Indicates the barometric setting selected with the barometric selector.

STD is displayed when selected with the barometric selector.

10 Ambient Light Sensor

Automatically adjusts display intensity for ambient lighting condition.

11 Glideslope Pointer and Deviation Scale

The glideslope pointer indicates glideslope position relative to the airplane.

- the pointer is in view when the glideslope signal is received
- the scale is in view when the APP mode is selected
- the pointer and scale are removed when the BCRS mode is selected

12 Current Altitude

13 Localizer Pointer and Deviation Scale

The localizer pointer indicates localizer position relative to the airplane.

- the pointer is in view when the localizer signal is received
- the scale is in view when either the APP or BCRS mode is selected

Copyright © The Boeing Company. See title page for details.

14 Barometric (BARO) Selector

Rotate – changes barometric setting

Push –

- selects standard barometric setting (29.92 inches Hg/1013 HPA)
- if STD is displayed, selects the preselected barometric setting

15 Heading Indication

Displays airplane heading.

ISFD Messages

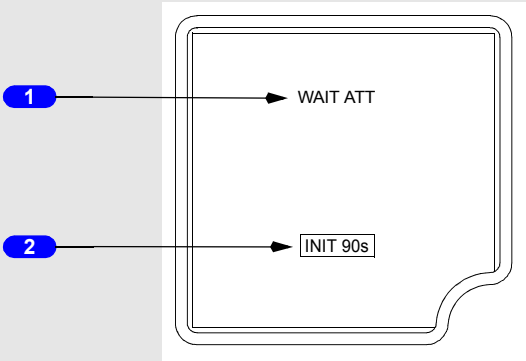

ISFD

1 Attitude Messages

Indicates attitude display status.

- ATT:RST (amber) – attitude must be reset using the attitude reset switch
- ATT 10s (amber) – 10 second attitude realignment in progress
- WAIT ATT (amber) – indicates temporary self correcting loss of attitude

2 Initialization Message

INIT 90s (amber) – 90 second initialization in progress.

Copyright © The Boeing Company. See title page for details.

ISFD Failure Flags

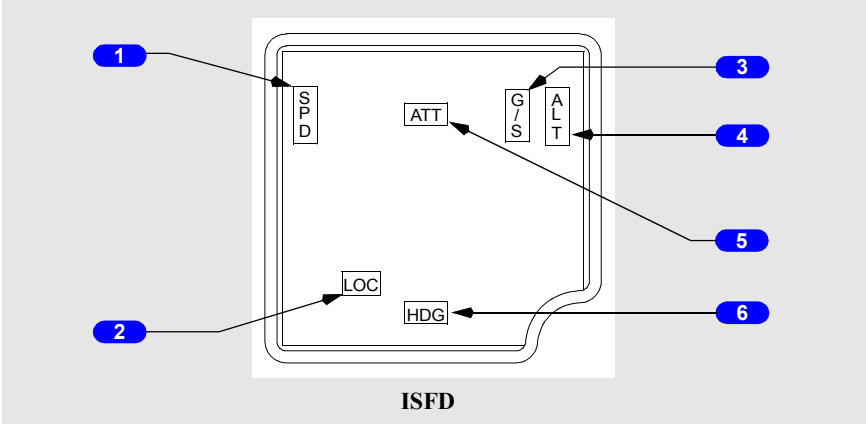

ISFD

1 Airspeed flag

Airspeed information has failed.

2 ILS localizer failure flag

ILS localizer has failed.

3 ILS glideslope failure flag

ILS glideslope has failed.

4 Altitude flag

Altitude information has failed.

5 Attitude flag

Attitude information has failed.

6 Heading flag

Heading data has failed.

Copyright © The Boeing Company. See title page for details.

Standby Radio Magnetic Indicator

[Option - Dual ADF]

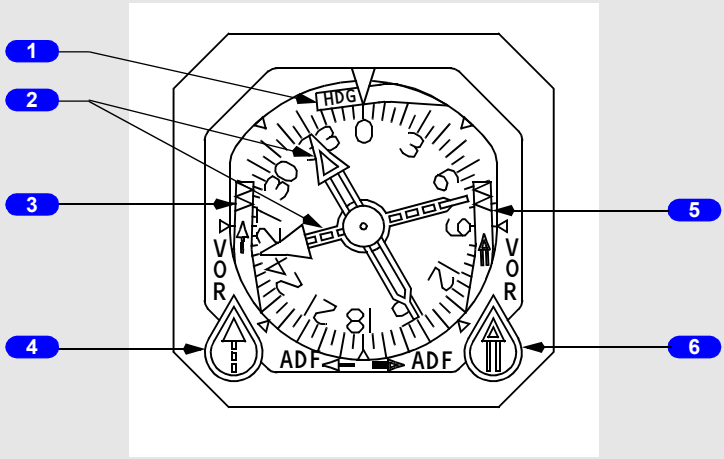

CENTER FORWARD PANEL

1 Heading Warning Flag

The compass signal from the air data inertial reference system is lost.

2 Bearing Pointers

- narrow pointer uses signals from the VHF NAV receiver No. 1 or ADF receiver No. 1.

[Option - Dual ADF]

- wide pointer uses signals from the VHF NAV receiver No. 2 or ADF receiver No. 2.

3 Bearing Pointer No. 1 Warning Flag

VOR mode:

- RMI power failure
- VHF NAV signal unreliable.

ADF mode:

- RMI power failure
- ADF failure or signal unreliable.

4 VOR/ADF Bearing Pointer No. 1 Switch

ROTATE – selects VOR or ADF for the bearing pointer.

Copyright © The Boeing Company. See title page for details.

5 Bearing Pointer No. 2 Warning Flag

VOR mode

- RMI power failure
- VHF NAV signal unreliable.

[Option - Dual ADF]
ADF mode

- RMI power failure
- ADF failure or signal unreliable.

6 VOR/ADF Bearing Pointer No. 2 Switch
[Option - Dual ADF]

ROTATE – selects VOR or ADF for the bearing pointer.

Clock

[Option - Smiths 60B00303-105]

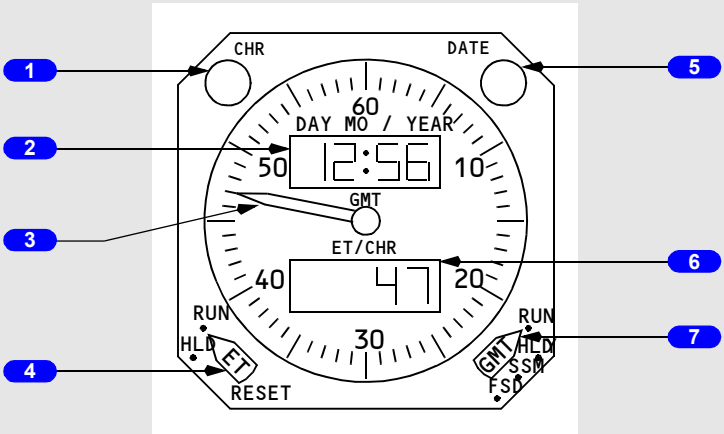

LEFT and RIGHT FORWARD PANELS

1 Chronograph (CHR) Control

PUSH –

- controls the start, stop and reset functions of the CHR display and second hand with successive pushing
- overrides any existing ET display.

Copyright © The Boeing Company. See title page for details.

2 Time/Date Window

- displays time (hours, minutes) when time is selected with the date control
- alternately displays day–month and year when date is selected with the date control.

3 Chronograph Second Hand

- indicates chronograph seconds
- controlled by the CHR control

4 Elapsed Time (ET) Selector (three position, rotary)

Controls the elapsed time function.

RESET – returns ET display to zero (spring loaded to HLD).

HLD (hold) – stops the elapsed time display.

RUN – starts the elapsed time display.

5 Date Control

Controls the date display.

PUSH – displays date (day, month) alternating with year.

PUSH – returns display to time.

6 Elapsed Time (ET)/Chronograph Window

- displays elapsed time (hours, minutes) or chronograph minutes
- the chronograph display replaces the elapsed time display
- elapsed time continues to run in the background and displays after the chronograph is reset.

7 Time Control (four position, rotary)

Sets the time and date when the time or date is selected with the date control.

FS D (fast slew, day) –

- advances hours when time is selected with the date control
- advances days when date is selected with the date control.

SS M (slow slew, month) –

- advances minutes when time is selected with the date control
- advances months when date is selected with the date control.

HLD Y (hold, year) –

- stops the time indicator and sets the seconds to zero when time is selected with the date control
- advances years when date is selected with the date control.

Copyright © The Boeing Company. See title page for details.

RUN – starts the time indicator.

Clock Switch
[Option]

GLARESHIELD PANEL

1 Clock Switch

Operates the same as the chronograph (CHR) control.

Timer
[Option]

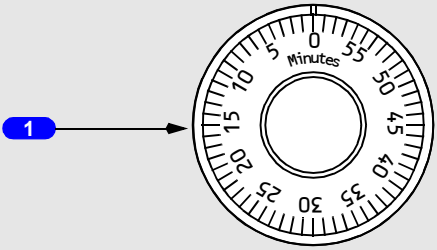

AFT OVERHEAD PANEL

1 Mechanical Timer

Copyright © The Boeing Company. See title page for details.

Flight Recorder

[Option - Without QAR lights]

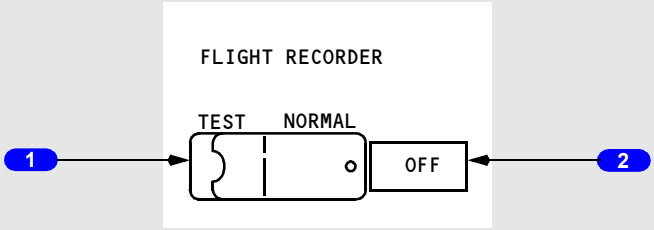

AFT OVERHEAD PANEL

[Option - With QAR lights]

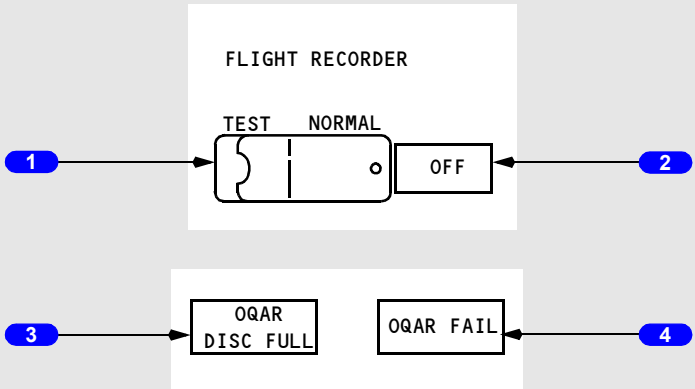

AFT OVERHEAD PANEL

1 Flight Recorder Test Switch

NORMAL (guarded position) –

- inflight – the recorder operates anytime electrical power is available
- on the ground – either engine must also be operating.

TEST – powers the flight recorder on the ground.

2 OFF Light (amber)

ILLUMINATED –

- indicates the recorder is not operating or the test is invalid
- may indicate power failure, loss of input data, or electronic malfunction.

Copyright © The Boeing Company. See title page for details.

3 Optical Quick Access Recorder (OQAR) Disc Full (blue) [Option - QAR lights]

ILLUMINATED –

- indicates the quick access recorder is full

4 Optical Quick Access Recorder (OQAR) FAIL (blue) [Option - QAR lights]

ILLUMINATED –

- indicates the quick access recorder has failed

Copyright © The Boeing Company. See title page for details.

EFIS Control Panel (PFD/ND Display)

The left EFIS control panel controls the Captain outboard and inboard display units. The right EFIS control panel controls the First Officer outboard and inboard display units.

EFIS Control Panel Controls – Flight Instrument Displays

[Option - Dual ADF]

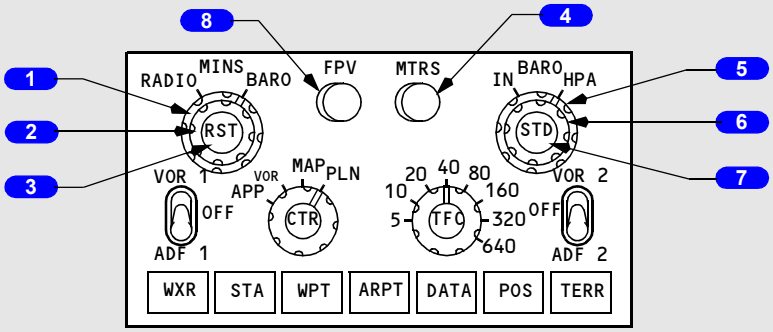

GLARESHIELD

1 Minimums (MINS) Reference Selector (outer) (two position)

RADIO – selects radio altitude as the minimums reference

BARO – selects barometric altitude as the minimums reference.

2 Minimums (MINS) Selector (middle) (slew)

ROTATE – adjusts the radio or baro minimums altitude.

3 Radio Minimums (MINS) Reset (RST) Switch (inner) (momentary action)

PUSH –

- resets the alert minimums annunciation
- blanks minimums display if alert is not active.

4 Meters (MTRS) Switch (momentary action)

PUSH – displays altitude indications in meters.

Copyright © The Boeing Company. See title page for details.

5 Barometric (BARO) Reference Selector (outer) (two position)

IN – selects inches of mercury as the barometric altitude reference

HPA – selects hectopascals as the barometric altitude reference.

6 Barometric (BARO) Selector (middle) (slew)

ROTATE –

- adjusts the barometric altitude setting on the altitude tape
- if STD displayed, adjusts the preselected BARO reference.

7 Barometric (BARO) Standard (STD) Switch (inner) (momentary action)

PUSH –

- selects the standard barometric setting (29.92 inches Hg/1013 HPA) for barometric altitude reference
- if STD is displayed, selects the preselected barometric reference
- if no preselected barometric is displayed, displays the last value before STD was selected.

8 Flight Path Vector (FPV) Switch (momentary action)

PUSH – displays flight path vector on the attitude indicator.

EFIS Control Panel Controls – Navigation Displays

[Option - Dual ADF]

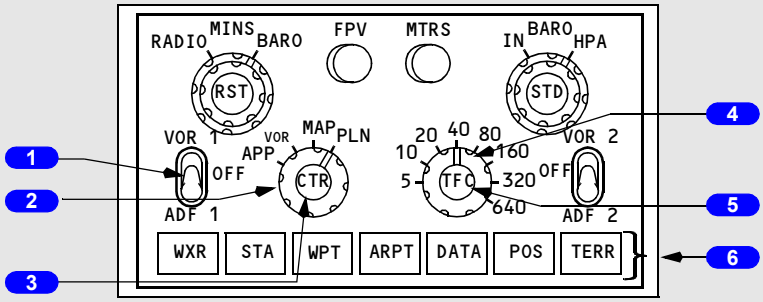

GLARESHIELD

1 VOR/ADF Switch (three position)

Displays VOR or ADF information on all navigation modes except PLAN.

VOR – displays the selected VOR bearing pointer, frequency or identification and DME.

Copyright © The Boeing Company. See title page for details.

OFF – removes the VOR or ADF displays.

ADF – displays the selected ADF pointer and ADF frequency or identification.

2 Mode Selector (outer)

Selects the desired display.

APP –

- displays localizer and glideslope information in heading–up format
- displays reference ILS receiver, ILS frequency or identification, course and DME
- weather radar and TCAS are not displayed in center APP mode.

VOR –

- displays VOR navigation information in heading–up format
- displays reference VOR receiver, VOR frequency or identification, course, DME and TO/FROM information
- weather radar and TCAS are not displayed in center VOR mode.

MAP –

[Option - Track-up display]

- displays FMC generated route and MAP information, airplane position, heading and track, in a track–up format
- displays waypoints, including the active waypoint, within the selected range
- displays VNAV path deviation.

PLN –

- displays a non–moving, true north up, route depiction
- the airplane symbol represents actual airplane position and orientation
- allows route step–through using the CDU LEGS page
- weather radar and TCAS are not displayed.

3 Center (CTR) Switch (inner)

PUSH –

- displays the full compass rose (center) for APP, VOR and MAP modes
- subsequent pushes alternate between expanded and center displays.

4 Range Selector (outer)

Selects desired display range in nautical miles for APP, VOR, MAP or PLN mode.

5 Traffic (TFC) Switch (inner)

PUSH – displays TCAS information on the navigation display (refer to Chapter 15, Warning Systems).

Copyright © The Boeing Company. See title page for details.

6 MAP Switches (momentary action)

The MAP switches:

- add background data/symbols to MAP and center MAP modes
- displays can be selected simultaneously
- second push removes the information.

WXR (weather radar) – energizes weather radar transmitter and displays weather radar returns in MAP, center MAP, expanded VOR and expanded APP modes. When the 640 nm range is selected, weather radar returns are limited to 320 nm (refer to Chapter 11, Flight Management, Navigation).

STA (station) –

- displays all FMC data base navigation aids if on map scales 5, 10, 20 or 40 nm
- displays FMC data base high altitude navigation aids on map scales 80, 160, 320 or 640 nm.

WPT (waypoint) – displays the waypoints in the FMC data base which are not in the flight plan route if the selected range is 40 nm or less.

ARPT (airport) – displays all airports which are stored in the FMC data base and which are within the viewable map area.

DATA – displays altitude constraint, if applicable, and estimated time of arrival for each active route waypoint.

POS (position) – displays IRS positions, GPS positions and VOR bearing vectors extended from the nose of the airplane symbol to the stations.

TERR (terrain) – displays GPWS generated terrain data in MAP, center MAP, VOR, and APP modes (refer to Chapter 15, Warning Systems).

Displays Source Panel

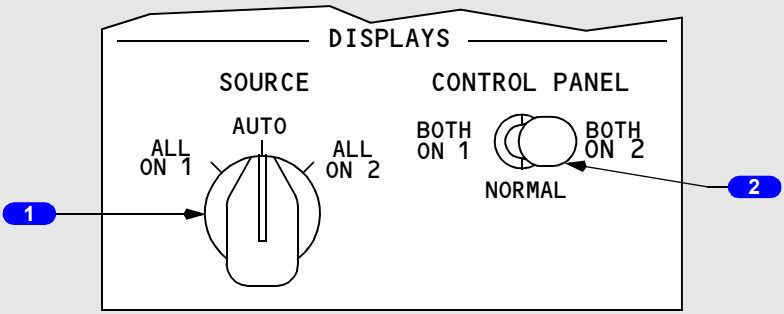

FORWARD OVERHEAD PANEL

Copyright © The Boeing Company. See title page for details.

1 DISPLAYS SOURCE Selector

AUTO – DEU 1 controls the Captain outboard, Captain inboard, and the upper display units; DEU 2 controls the First Officer outboard, First Officer inboard, and the lower display units. When a DEU fails, the other DEU controls all display units.

ALL ON 1/ALL ON 2 – provides a means of manually switching to a single DEU as the source of information for all six display units.

Note: Used on the ground for maintenance purposes.

2 CONTROL PANEL Select Switch

NORMAL – the left EFIS control panel controls the Captain's displays and the right EFIS control panel controls the First Officer's displays.

BOTH ON 1/BOTH ON 2 – provides a means of manually switching control of the Captain's and First Officer's displays to a single EFIS control panel.

Display Select Panels

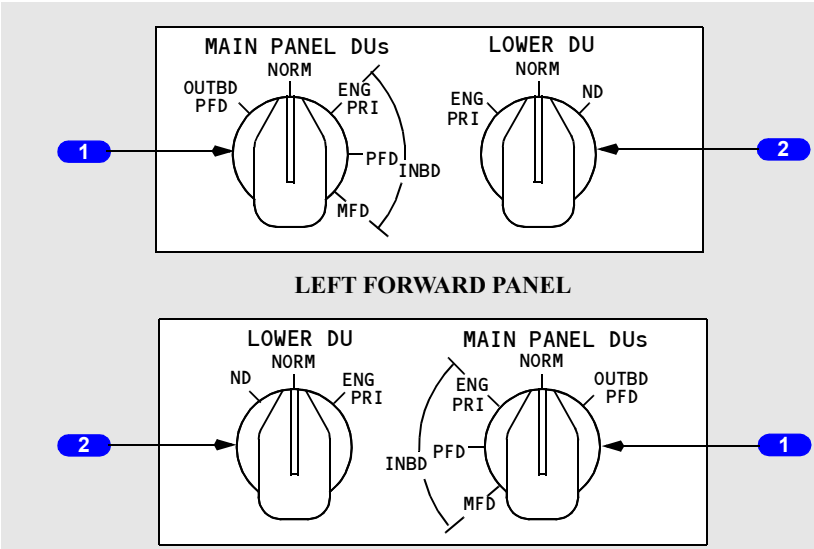

Copyright © The Boeing Company. See title page for details.

1 Main Panel Display Units (MAIN PANEL DUs) Selector

Selects what is displayed on the respective outboard and inboard display units:

- Outboard Primary Flight Display (OUTBD PFD) – displays the PFD on the outboard display unit and blanks the inboard display unit
- Normal (NORM) – displays PFD on the outboard display unit and ND on the inboard display unit
- Inboard Engine Primary (INBD ENG PRI) – displays the primary engine instruments on the inboard display unit and the PFD on the outboard display unit
- Inboard Primary Flight Display (INBD PFD) – displays the PFD on the inboard display unit and blanks the outboard display unit
- Inboard Multifunction Display (INBD MFD) – displays PFD on the outboard display unit and blanks the inboard display unit. The inboard display unit stays blank until system format (SYS) or secondary engine format (ENG) is selected with MFD switches on the engine display control panel.

2 Lower Display Unit (LOWER DU) Selector

Selects what is displayed on the lower display unit:

- Engine Primary (ENG PRI) – displays the primary engine instruments on the lower display unit and blanks the upper display unit
- Normal (NORM) – display unit is normally blank or displays MFD format selected on the engine display control panel
- Navigation Display (ND) – displays the navigation display on the lower unit.

Speed Reference Selector

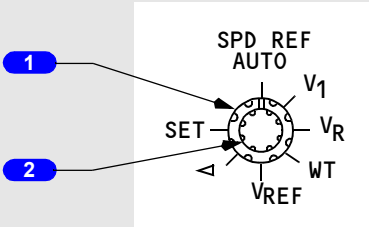

CENTER FORWARD PANEL

Copyright © The Boeing Company. See title page for details.

1 Speed Reference Selector (outer)

Sets the reference airspeed bugs on the airspeed indication:

- AUTO – the reference airspeeds and gross weight are provided automatically through the FMC
- V1 – used to manually set decision speed on the ground; in flight, displays "INVALID ENTRY"
- VR – used to manually set rotation speed on the ground; in flight, displays "INVALID ENTRY"
- WT – allows manual entry of reference gross weight
- VREF – used to manually set the landing reference speed in flight; on the ground, displays "INVALID ENTRY"
- Bug 5 – used to manually set the white bug 5 to the desired value
- SET – removes the speed reference display.

2 Speed Reference Selector (inner) (two speed slew)

ROTATE –

- manually sets the appropriate reference airspeed or gross weight
- the digital display appears below the airspeed indication.

Display Brightness Controls

Captain Brightness Controls

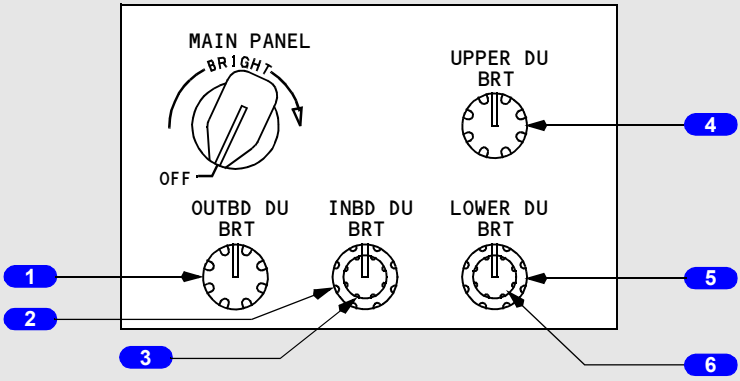

LEFT FORWARD PANEL

1 Outboard Display Unit Brightness (OUTBD DU BRT) Control (rotary)

ROTATE – adjusts the brightness of the Captain outboard display unit.

Copyright © The Boeing Company. See title page for details.

2 Inboard Display Unit Brightness (INBD DU BRT) Control (outer) (rotary)

ROTATE – adjusts the brightness of the Captain inboard display unit.

3 Inboard Display Unit Radar Brightness (INBD DU BRT) Control (inner) (rotary)

ROTATE – adjusts weather radar and terrain display brightness on the Captain inboard display unit.

4 Upper Display Unit Brightness (UPPER DU BRT) Control (rotary)

ROTATE – adjusts the brightness of the upper display unit.

5 Lower Display Unit Brightness (LOWER DU BRT) Control (outer) (rotary)

ROTATE – adjusts the brightness of the lower display unit.

6 Lower Display Unit Brightness (LOWER DU BRT) Control (inner) (rotary)

ROTATE – adjusts weather radar and terrain display brightness on the lower display unit.

First Officer Brightness Controls

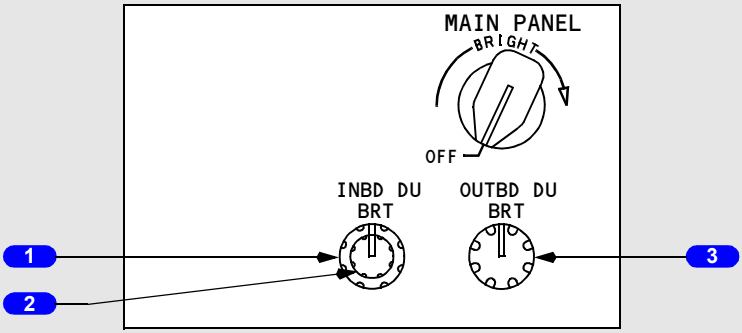

RIGHT FORWARD PANEL

1 Inboard Display Unit Brightness (INBD DU BRT) Control (outer) (rotary)

ROTATE – adjusts the brightness of the First Officer inboard display unit.

Copyright © The Boeing Company. See title page for details.

2 Inboard Display Unit Radar Brightness (INBD DU BRT) Control (inner) (rotary)

ROTATE – adjusts weather radar and terrain display brightness on the First Officer inboard display unit.

3 Outboard Display Unit Brightness (OUTBD DU BRT) Control (rotary)

ROTATE – adjusts the brightness of the First Officer outboard display unit.

Copyright © The Boeing Company. See title page for details.

Standby Flight Instruments

The standby flight instruments include the:

- standby magnetic compass
- integrated standby flight display
- standby radio magnetic indicator.

Standby Magnetic Compass

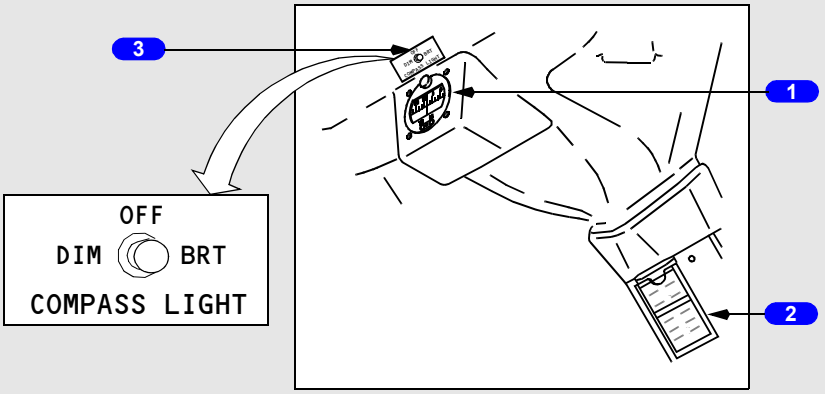

CENTER POST ABOVE GLARESHIELD

1 Standby Magnetic Compass

Displays magnetic heading.

2 Standby Magnetic Compass Correction Card

Provides appropriate heading corrections.

3 Compass Light Switch

OFF – compass light is extinguished.

BRT – sets compass light to full brightness.

DIM – sets compass light to low brightness.

Copyright © The Boeing Company. See title page for details.

Integrated Standby Flight Display

[Option - Sextant S231A120-1]

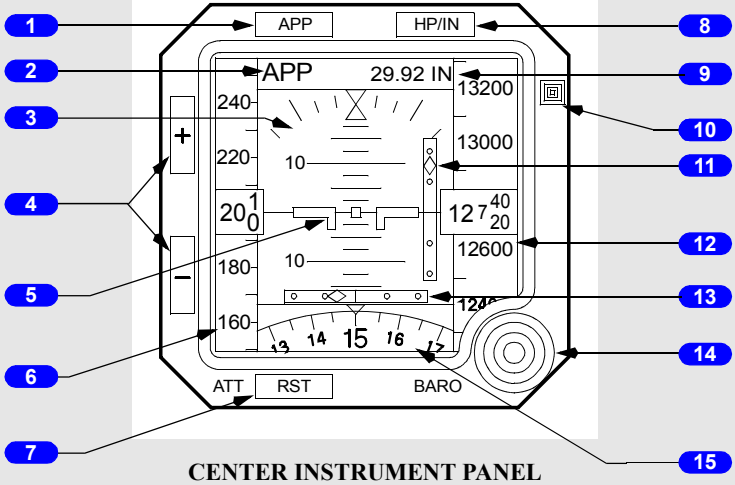

1 Approach (APP) Switch

Push – selects approach mode.

2 Approach Mode Annunciation

Indicates approach mode selected.

- Blank – no approach deviation data displayed
- APP – ILS localizer and glideslope deviation data displayed
- BCRS (Back course) – reverses sensing for localizer pointer during back course approaches

3 Attitude Display

Displays airplane attitude.

- Indicates bank in reference to the bank scale
- Indicates the horizon relative to the airplane symbol
- Beyond 30 degrees pitch, large red arrowheads (V-shaped) indicate the attitude has become excessive, and the direction to the horizon line.

Copyright © The Boeing Company. See title page for details.

4 Display Brightness Switches

Push –

- + increases display brightness
- - decreases display brightness

5 Airplane Symbol

Indicates airplane attitude with reference to the horizon.

6 Airspeed Indications

Indicates current airspeed when above 30 knots.

7 Attitude Reset (ATT RST) Switch

Push and hold at least two seconds

- aligns horizon with the airplane symbol
- reset takes approximately ten seconds

8 Hectopascal/Inch (HP/IN) Switch

Push – changes the units of the barometric reference.

9 Barometric Setting

Indicates the barometric setting selected with the barometric selector.

STD is displayed when selected with the barometric selector.

10 Ambient Light Sensor

Automatically adjusts display intensity for ambient lighting condition.

11 Glideslope Pointer and Deviation Scale

The glideslope pointer indicates glideslope position relative to the airplane.

- the pointer is in view when the glideslope signal is received
- the scale is in view when the APP mode is selected
- the pointer and scale are removed when the BCRS mode is selected

12 Current Altitude

13 Localizer Pointer and Deviation Scale

The localizer pointer indicates localizer position relative to the airplane.

- the pointer is in view when the localizer signal is received
- the scale is in view when either the APP or BCRS mode is selected

Copyright © The Boeing Company. See title page for details.

14 Barometric (BARO) Selector

Rotate – changes barometric setting

Push –

- selects standard barometric setting (29.92 inches Hg/1013 HPA)
- if STD is displayed, selects the preselected barometric setting

15 Heading Indication

Displays airplane heading.

ISFD Messages

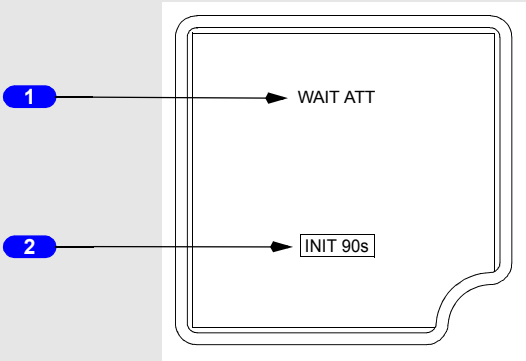

ISFD

1 Attitude Messages

Indicates attitude display status.

- ATT:RST (amber) – attitude must be reset using the attitude reset switch
- ATT 10s (amber) – 10 second attitude realignment in progress
- WAIT ATT (amber) – indicates temporary self correcting loss of attitude

2 Initialization Message

INIT 90s (amber) – 90 second initialization in progress.

Copyright © The Boeing Company. See title page for details.

ISFD Failure Flags

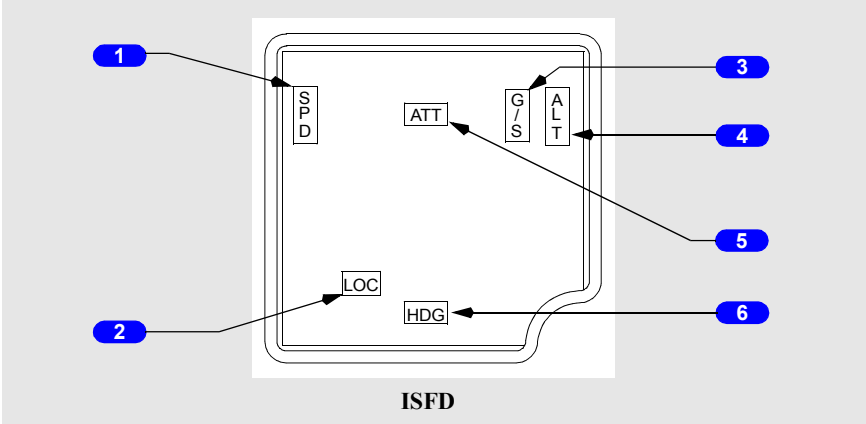

ISFD

1 Airspeed flag

Airspeed information has failed.

2 ILS localizer failure flag

ILS localizer has failed.

3 ILS glideslope failure flag

ILS glideslope has failed.

4 Altitude flag

Altitude information has failed.

5 Attitude flag

Attitude information has failed.

6 Heading flag

Heading data has failed.

Copyright © The Boeing Company. See title page for details.

Standby Radio Magnetic Indicator

[Option - Dual ADF]

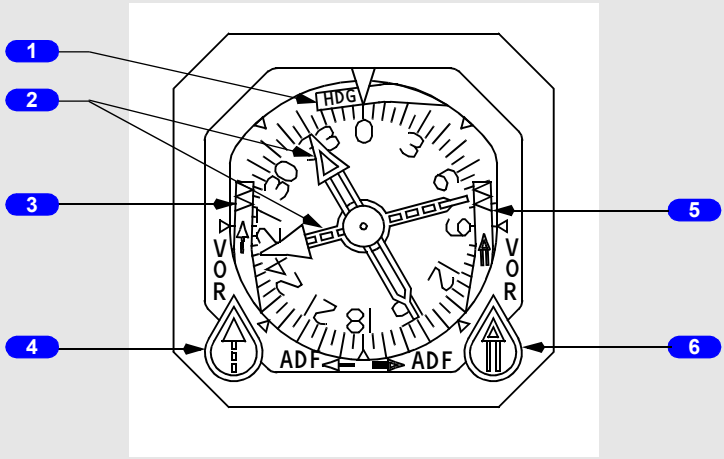

CENTER INSTRUMENT PANEL

1 Heading Warning Flag

The compass signal from the air data inertial reference system is lost.

2 Bearing Pointers

- narrow pointer uses signals from the VHF NAV receiver No. 1 or ADF receiver No. 1

[Option - Dual ADF]

- wide pointer uses signals from the VHF NAV receiver No. 2 or ADF receiver No. 2.

3 Bearing Pointer No. 1 Warning Flag

VOR mode:

- RMI power failure
- VHF NAV signal unreliable.

ADF mode:

- RMI power failure
- ADF failure or signal unreliable.

4 VOR/ADF Bearing Pointer No. 1 Switch

ROTATE – selects VOR or ADF for the bearing pointer.

Copyright © The Boeing Company. See title page for details.

5 Bearing Pointer No. 2 Warning Flag

VOR mode:

- RMI power failure
- VHF NAV signal unreliable.

[Option - Dual ADF]
ADF mode:

- RMI power failure
- ADF failure or signal unreliable.

6 VOR/ADF Bearing Pointer No. 2 Switch
[Option - Dual ADF]

ROTATE – selects VOR or ADF for the bearing pointer.

Clock

[Option - GPS capable]

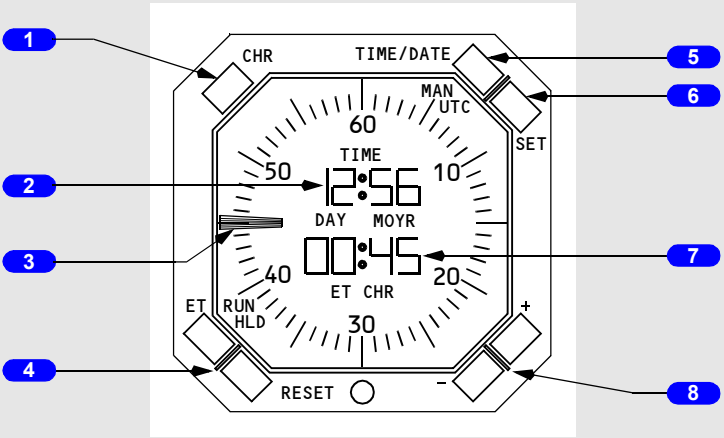

LEFT and RIGHT FORWARD PANELS

1 Chronograph (CHR) Control

PUSH –

- controls the start, stop and reset functions of the CHR display and second hand with successive pushing
- overrides any existing ET display.

Copyright © The Boeing Company. See title page for details.

2 Time/Date Indicator

- displays UTC or manual time (hours, minutes) when time is selected with the time/date pushbutton
- alternately displays day–month and year when date is selected with the time/date pushbutton.

3 Chronograph Second Hand

- indicates chronograph seconds
- controlled by the CHR control.

4 Elapsed Time (ET) and RESET Pushbutton

Controls the elapsed time function:

- select the ET pushbutton once to run the elapsed time
- select the ET pushbutton again to hold the elapsed time
- select the RESET pushbutton to set the elapsed time to 0.

The RUN or HLD symbol is displayed on the lower left part of the LCD display.

5 TIME/DATE Pushbutton

Controls the time/date function:

- select the TIME/DATE pushbutton once to see UTC time
- select the TIME/DATE pushbutton again to see UTC date
- select the TIME/DATE pushbutton again to see manual time
- select the TIME/DATE pushbutton again to see manual date.

The UTC or MAN symbol is displayed on the upper right part of the LCD display.

In MAN mode, clock time and date come from the clock. In UTC mode, clock time and date come from the global positioning system.

6 SET Pushbutton

Controls the setting of manual time and date:

With manual time displayed:

- select the SET pushbutton once and the hours flash, use the plus or minus pushbutton to adjust the hours
- select the SET pushbutton again and the minutes flash, use the plus or minus pushbutton to adjust the minutes
- select the SET pushbutton again to run the time.

Copyright © The Boeing Company. See title page for details.

With manual date displayed:

- select the SET pushbutton once and the day flashes, use the plus or minus pushbutton to adjust the day
- select the SET pushbutton again and the month flashes, use the plus or minus pushbutton to adjust the month
- select the SET pushbutton again and the year flashes, use the plus or minus pushbutton to adjust the year
- select the SET pushbutton again to run the date.

Note: A delay greater than one minute while setting the time or date results in the clock reverting to the previous time/date setting.

7 Elapsed Time (ET)/Chronograph Indicator

- displays elapsed time (hours, minutes) or chronograph minutes
- the chronograph display replaces the elapsed time display
- elapsed time continues to run in the background and displays after the chronograph is reset.

8 Plus (+) and Minus (-) Pushbuttons

Used to set the manual time and date:

- select the + pushbutton to increase the value
- select the - pushbutton to decrease the value.

Clock Switch

[Option]

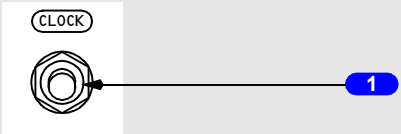

GLARESHIELD PANEL

1 Clock Switch

Operates the same as the chronograph (CHR) control.

Copyright © The Boeing Company. See title page for details.

Timer

[Option]

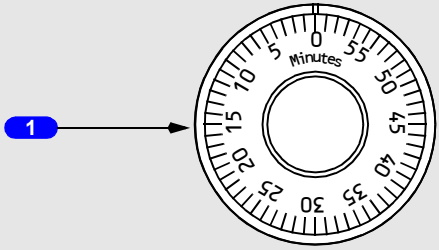

AFT OVERHEAD PANEL

1 **Mechanical Timer**

Flight Recorder

[Option - Without QAR lights]

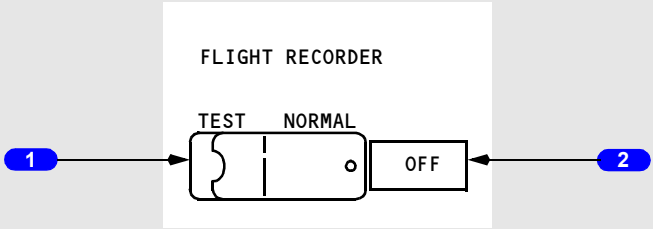

AFT OVERHEAD PANEL

Copyright © The Boeing Company. See title page for details.

[Option - With QAR lights]

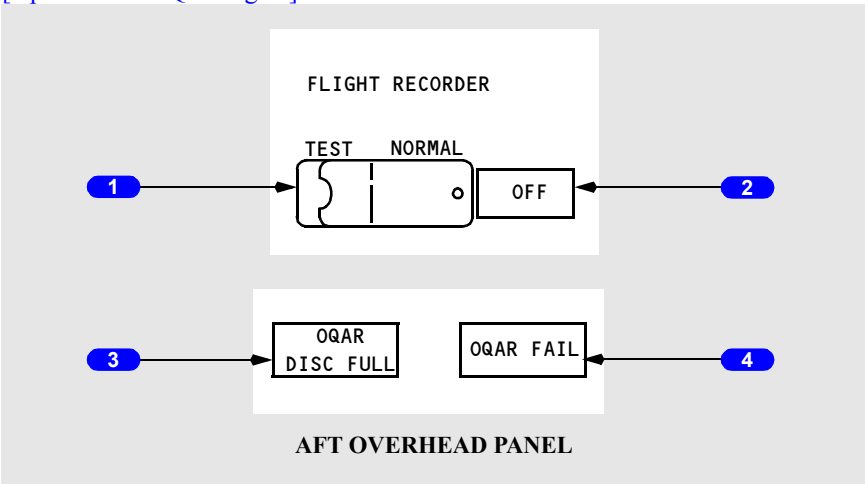

1 Flight Recorder Test Switch

NORMAL (guarded position) –

- in flight – the recorder operates anytime electrical power is available
- on the ground – either engine must also be operating.

TEST – powers the flight recorder on the ground.

2 OFF Light (amber)

ILLUMINATED –

- indicates the recorder is not operating or the test is invalid
- may indicate power failure, loss of input data, or electronic malfunction.

3 Optical Quick Access Recorder (OQAR) Disc Full (blue) [Option - QAR lights]

ILLUMINATED –

- indicates the quick access recorder is full

4 Optical Quick Access Recorder (OQAR) FAIL (blue) [Option - QAR lights]

ILLUMINATED –

- indicates the quick access recorder has failed

Copyright © The Boeing Company. See title page for details.

Head-Up Display Control Panel Controls – Flight Instrument Displays

The HUD control panel controls modes of operation, display values, and system test and status information.

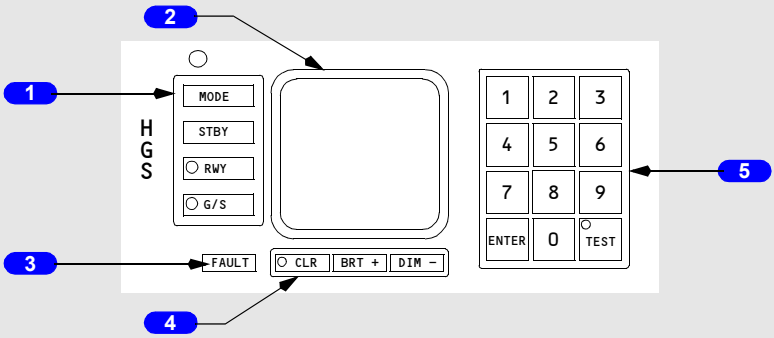

AFT ELECTRONIC PANEL

1 Mode/Function Keys

Push - selects mode or allows data entry:

- MODE – selects desired mode from available modes on the standby display line.
- STBY – selects standby mode.
- RWY – used to enter runway length and elevation or to toggle between entered values. Select once to enter runway length, select again to enter runway elevation. Use the DIM - (minus) key to enter negative values.
- G/S – used to enter the glideslope angle for the landing runway.

Note: Values entered using the mode/function keys are stored in the HUD computer. If a power interruption should occur, the last mode and value will be displayed once power is restored.

2 Control Panel Display

Displays information entered using the mode/function keys. Refer to Section 12, Head-Up Display System - Displays.

3 FAULT Light

Illuminated (amber) - HUD BITE fault.

Copyright © The Boeing Company. See title page for details.

4 Clear and Brightness Keys

CLR – used to clear all symbology from the combiner display. Symbology can be re-displayed by selecting CLR again, changing modes, or entering TEST. CLR can also be used as a backspace key during data entry and TEST operations.

BRT + (plus) – used to manually increase control panel display intensity.

DIM - (minus) – used to manually decrease control panel display intensity.

Note: Display brightness is adjusted automatically based on ambient light measured by a sensor located in the upper left corner of the control panel.

5 Numeric Keys

Push -

- 0 through 9 – puts selected number in display
- ENTER – used to enter selected values
- TEST – used by maintenance for system tests and troubleshooting.

HUD Annunciator Panel

[Option - Model 2350]

[Option - 3-light annunciator panel]

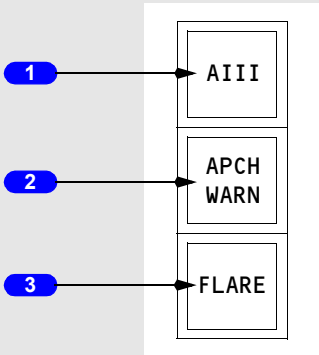

RIGHT FORWARD PANEL

1 AIII Light

Illuminated (green) - AIII mode is active and all required systems and equipment are valid.

2 APCH WARN Light

Illuminated (red) - system or approach conditions out of tolerance.

Copyright © The Boeing Company. See title page for details.

3 FLARE Light

Illuminated (green) - HUD system derived flare guidance is active.

Combiner Controls

[Option - Model 2350]

Brightness and Stow Controls

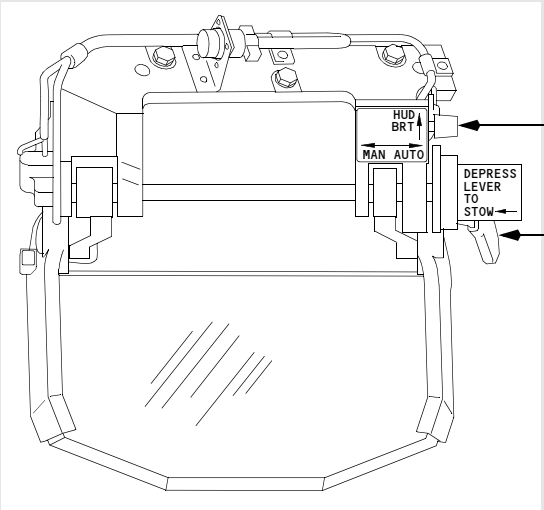

OVERHEAD FLIGHT DECK

1 Brightness Control Knob

MAN – push knob in for manual brightness adjustment.

AUTO – pull knob out for automatic brightness adjustment. Display intensity varies based on ambient light detected by a sensor on the combiner.

HUD BRT – rotate knob clockwise to increase display intensity. Rotate knob counter-clockwise to decrease display intensity.

2 Stow Lever

Push lever against the stow shaft housing and rotate vertically in the desired direction.

Copyright © The Boeing Company. See title page for details.

Combiner Breakaway

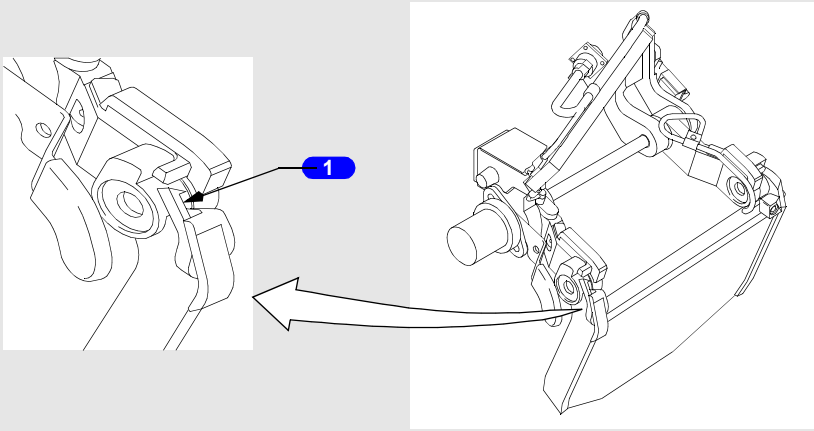

OVERHEAD FLIGHT DECK

1 Breakaway Reset Lever

Used to release the combiner from the break away position.

CAUTION: The breakaway feature allows the combiner to be displaced forward of its normal operating position. Do not allow the combiner to spring back from the full or near full breakaway position on its own, as this could cause damage to the combiner.

Combiner Alignment

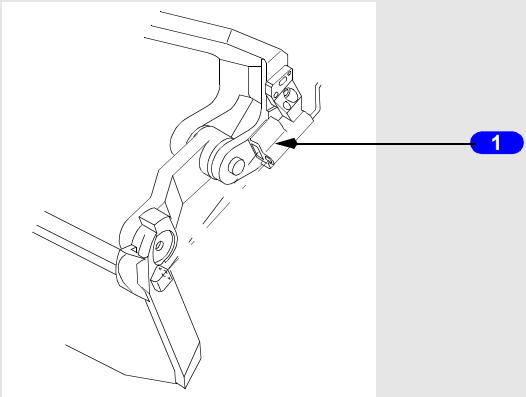

OVERHEAD FLIGHT DECK

Copyright © The Boeing Company. See title page for details.

1 Combiner Alignment Detector

Ensures correct combiner alignment with the overhead unit.

Consists of an infra-red emitter, mirror and detector.

Note: In the IMC or VMC modes, an out of tolerance condition results in an ALIGN HUD message on the combiner display. Gently push the combiner in the breakaway direction (forward) and release it to remove the message. If the message cannot be removed, the IMC or VMC mode should not be used.

Copyright © The Boeing Company. See title page for details.

Intentionally
Blank

Copyright © The Boeing Company. See title page for details.

DO NOT USE FOR FLIGHT

Introduction

The common display system (CDS) supplies information to the flight crew on six flat panel liquid crystal display units (DUs). The outboard and inboard display units present all primary flight and navigation information. Engine and system data are normally shown on the upper display unit. The lower display unit serves as a spare.

Detailed information on the following subjects is found in other sections of this chapter:

- Electronic Flight Instrument System (EFIS) – Section 30
- Navigation display – Section 40.

Display Brightness Control

Adjustment of the brightness of each DU is controlled by a combination of light sensors and brightness controls. Two remote light sensors, located left and right on the top of the glareshield, compensate for the amount of ambient light entering through the flight deck windows and adjust the brightness of the related DUs. Each DU also has an integral light sensor which provides automatic control of brightness as a function of ambient light striking the face of the DU. Brightness controls are used by the pilot to further adjust the intensity of each display unit.

Copyright © The Boeing Company. See title page for details.

DISPLAYS SOURCE Panel

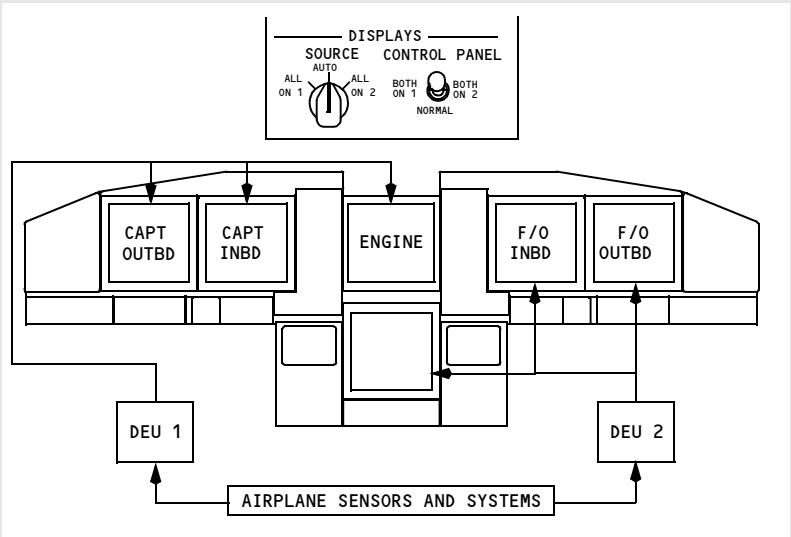

The DISPLAYS source panel, located on the forward overhead panel, contains source controls for the display electronic units (DEUs) and EFIS control panels.

Two DEUs receive data from sensors and airplane systems and supply data to the DUs. During normal operation, with the display SOURCE selector in the AUTO position, DEU1 supplies data to the Captain outboard, Captain inboard and upper DUs while DEU2 supplies data to the First Officer outboard, First Officer inboard and lower DUs. If a DEU fails, the remaining DEU automatically supplies data to all six displays. This prevents the loss of navigation information.

The display SOURCE selector, used on the ground for maintenance purposes, allows manual selection of either DEU1 or DEU2 for all six display units. If the displays are automatically or manually switched to a single DEU source, a “DSPLY SOURCE” annunciation illuminates above both pilot’s altimeters.

The CONTROL PANEL select switch determines which EFIS control panel controls the pilots’ display functions. With the switch positioned to either BOTH ON 1 or BOTH ON 2, the selected EFIS control panel provides inputs for both sets of pilot displays. When in the NORMAL position, a “DISPLAYS CONTROL PANEL” annunciation illuminates on the pilot’s altimeters and indicates a failure of the associated EFIS control panel.

Copyright © The Boeing Company. See title page for details.

EFIS Control Panels

The EFIS control panels, located on the glareshield, control display options, mode, and range for the related pilot's displays. Refer to the EFIS and navigation display sections of this chapter for detailed information.

If an EFIS control panel fails, the displays can be controlled by the remaining control panel.

Display Select Panel

The display select panel, located on the left and right forward panels, controls the displays on the inboard, outboard and lower DUs. Normal operation is all selectors in the NORMAL position. The pilots' outboard and inboard DUs display primary flight and navigation data and the upper DU displays engine data.

If a DU fails, automatic display switching ensures critical information remains available to the pilots at all times. If the system detects an operational failure on an outboard DU, the compact EFIS format automatically moves to the inboard DU and the failed outboard DU blanks. If the system detects a failure on an inboard DU, the compact EFIS format automatically moves to the outboard DU and the failed inboard DU blanks. If the upper DU fails, the engine display automatically moves to the lower DU.

Manual control of display formats is provided for undetected failures. The outboard rotary switch on the display select panel controls the formats displayed on either the outboard or inboard DUs. The inboard rotary switch controls the display format shown on the lower DU.

Copyright © The Boeing Company. See title page for details.

Display Selection and Control Examples

The following examples show display selections.

Normal Display Configuration

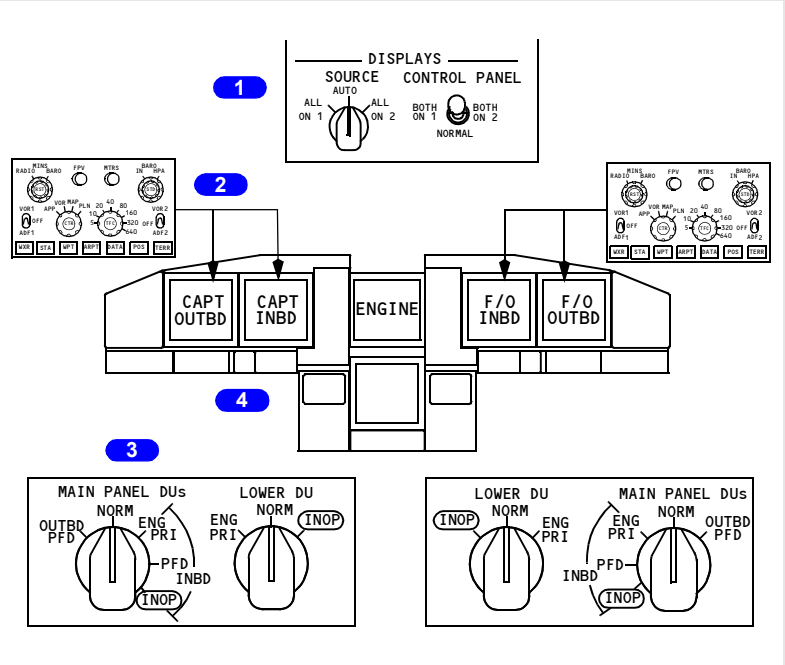

1 DISPLAYS Source Panel

The display SOURCE select switch is in AUTO and the CONTROL PANEL select switch is in NORMAL.

2 EFIS Control Panel

The left EFIS control panel controls the Captain outboard and inboard display units. The right EFIS control panel controls the First Officer outboard and inboard display units.

3 Display Select Panel

All selectors are in NORMAL.

Copyright © The Boeing Company. See title page for details.

4 Display Units

The pilots' outboard and inboard DUs show the normal EFIS/MAP displays.

Display Unit Failure Automatic Switching

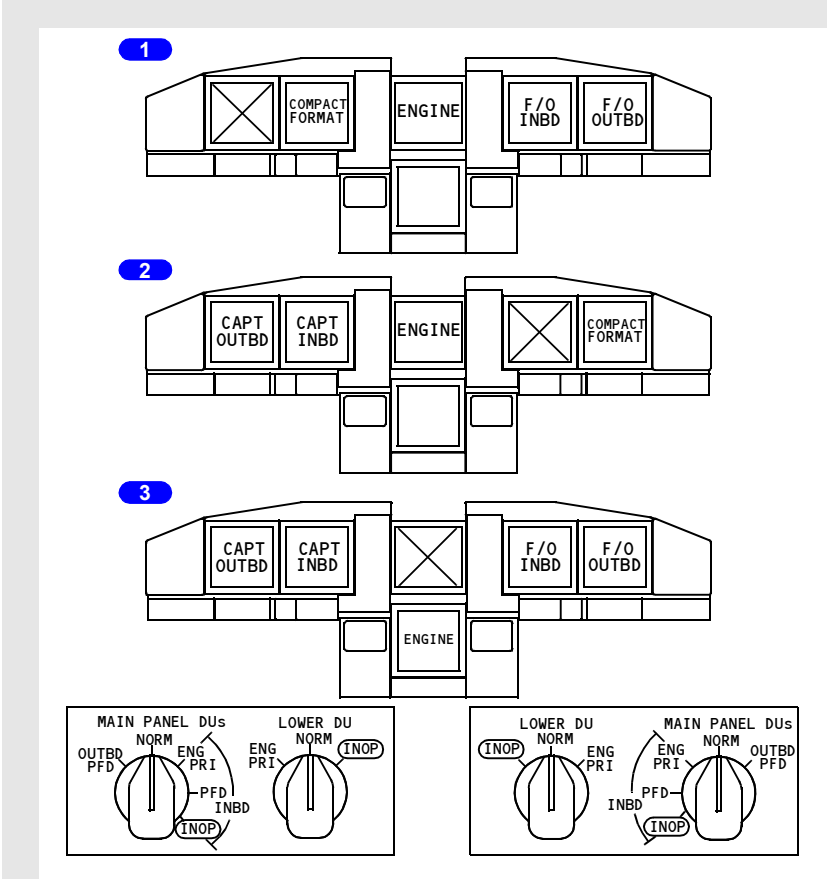

1 Outboard Display Unit Fails

If an outboard display unit fails, the compact EFIS format is automatically displayed on the inboard display unit and the outboard display unit blanks.

2 Inboard Display Unit Fails

If an inboard display unit fails, the compact EFIS format is automatically displayed on the outboard display unit and the inboard display unit blanks.

Copyright © The Boeing Company. See title page for details.

DO NOT USE FOR FLIGHT

3 Upper Display Unit Fails

If the upper display unit fails, the engine display automatically moves to the lower display unit and the upper display unit blanks.

Note: There is no automatic switching for a lower DU failure.

Copyright © The Boeing Company. See title page for details.

EFIS Control Panel

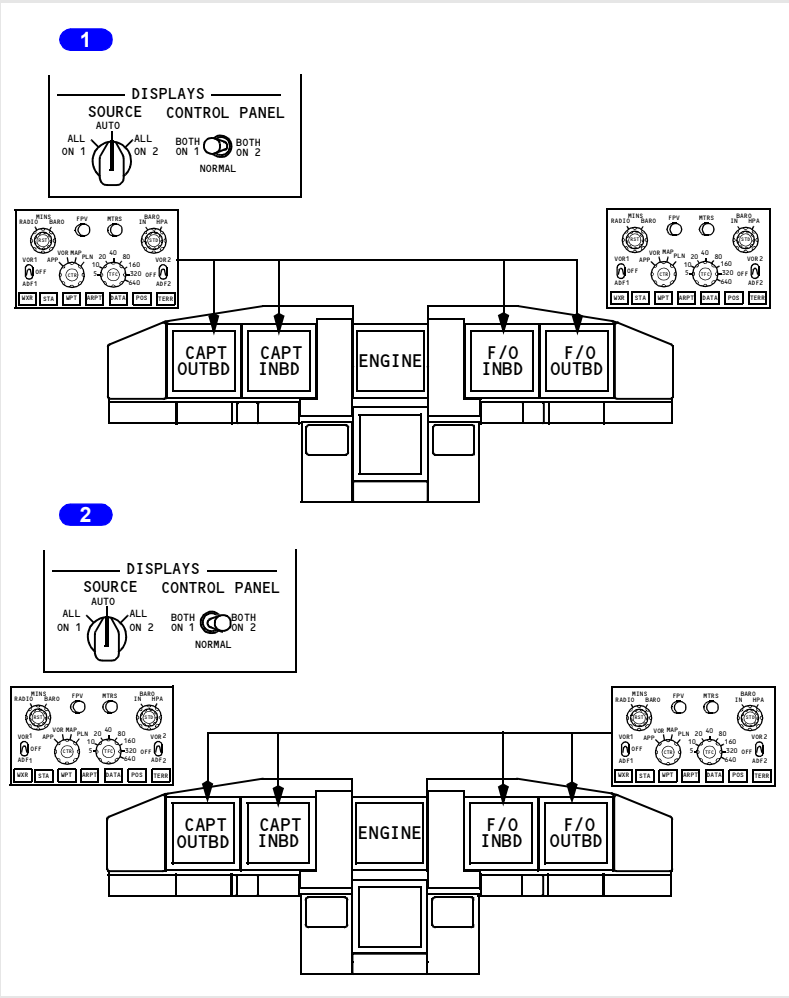

1 CONTROL PANEL Select Switch BOTH ON 1

The left EFIS control panel controls both pilots' outboard and inboard display units.

2 CONTROL PANEL Select Switch BOTH ON 2

The right EFIS control panel controls both pilots' outboard and inboard display units.

Copyright © The Boeing Company. See title page for details.

Outboard Display Switching

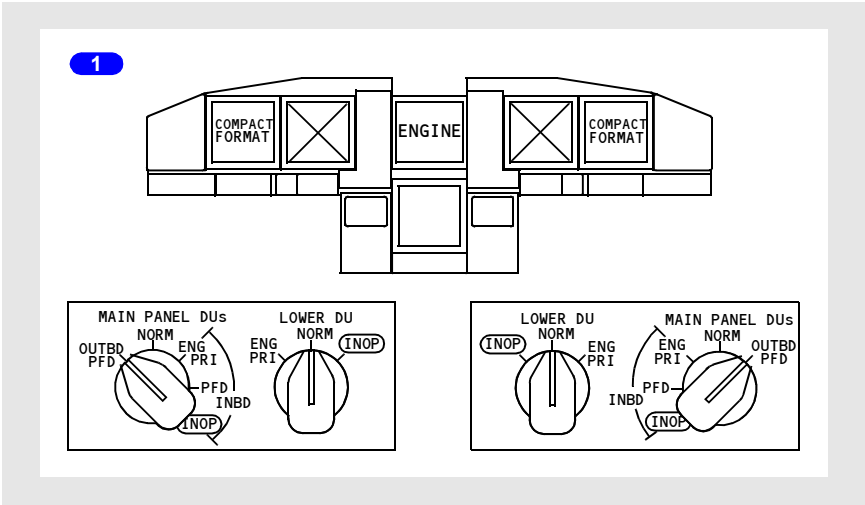

1 MAIN PANEL DUs Switch to OUTBD PFD

If the MAIN PANEL DUs switch is turned to Outboard Primary Flight Display (OUTBD PFD), the compact EFIS format is displayed on the outboard display unit and the inboard display unit blanks.

Copyright © The Boeing Company. See title page for details.

Inboard Display Switching

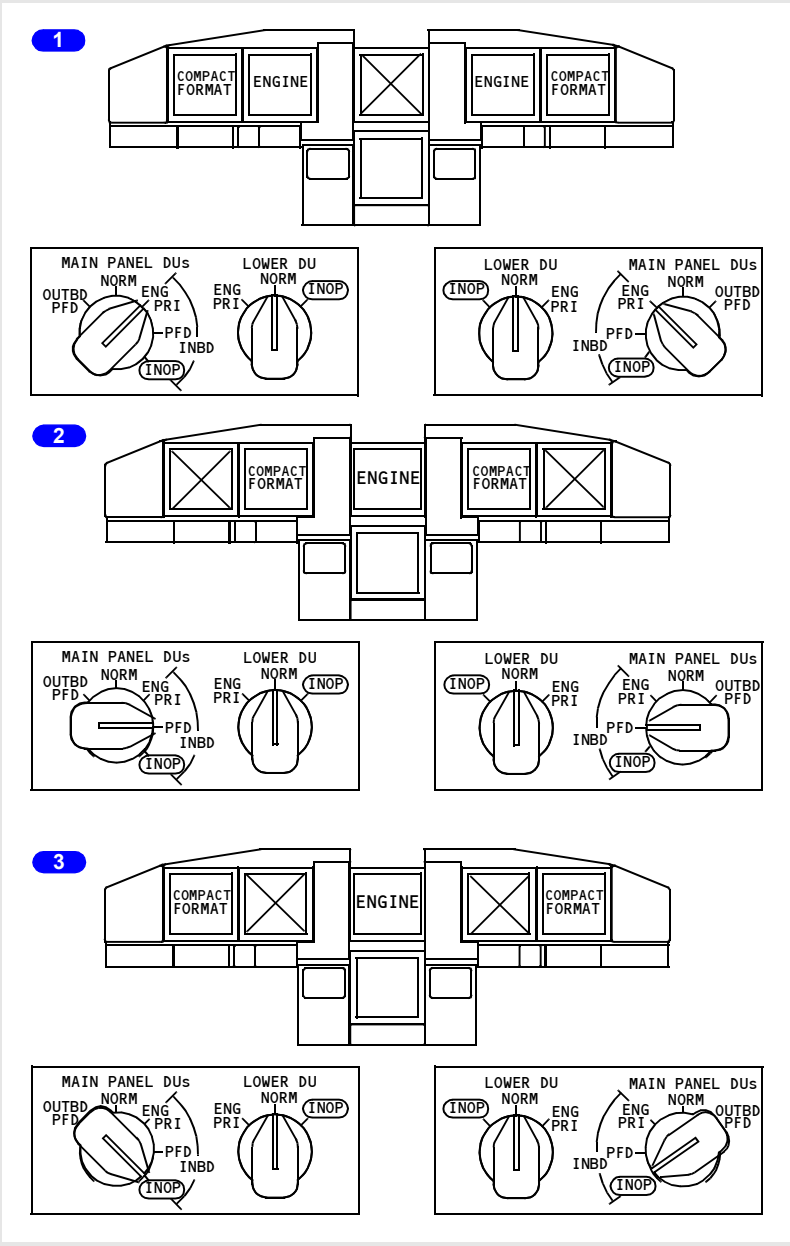

Copyright © The Boeing Company. See title page for details.

DO NOT USE FOR FLIGHT

1 MAIN PANEL DUs Switch to INBD ENG PRI

If the MAIN PANEL DUs switch is turned to INBD ENG PRI, the engine display moves to the inboard DU, the compact EFIS format is displayed on the outboard DU and the upper DU blanks.

2 MAIN PANEL DUs Switch to INBD PFD

If the MAIN PANEL DUs switch is turned to INBD PFD the compact EFIS format is displayed on the inboard DU and the outboard DU blanks.

3 MAIN PANEL DUs Switch to INOP

If the MAIN PANEL DUs switch is turned to INBD INOP the compact EFIS format is displayed on the outboard DU and the inboard DU blanks.

Copyright © The Boeing Company. See title page for details.

Lower Display Switching

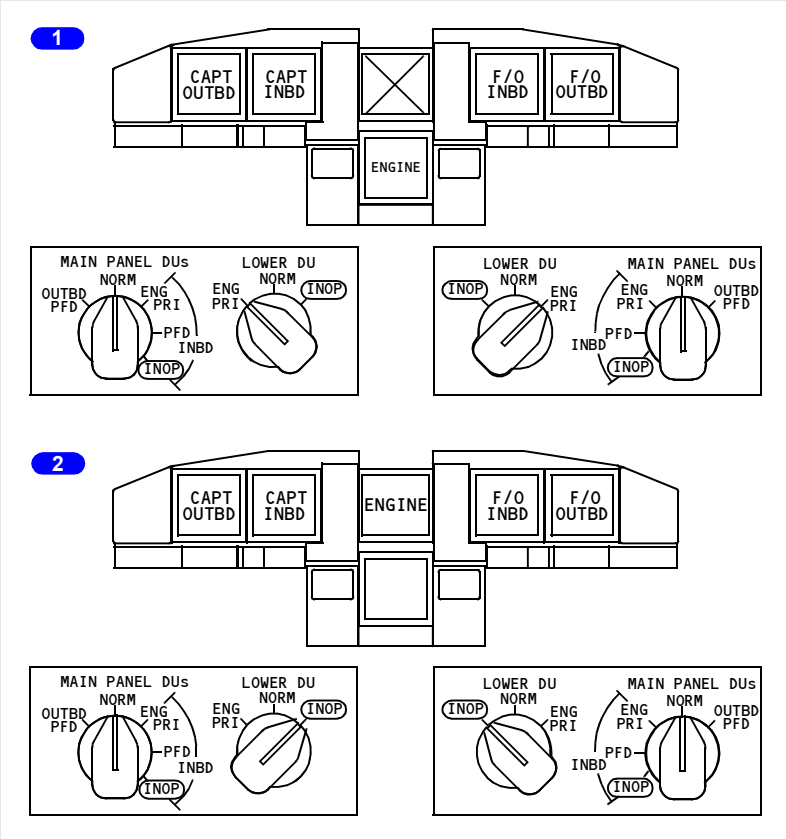

1 LOWER DU Switch to ENG PRI

If the LOWER DU switch is turned to ENG PRI, the engine display moves to the lower DU and the upper DU blanks.

2 LOWER DU Switch to INOP

If the LOWER DU switch is turned to INOP the engine display is shown on the upper DU and the lower DU blanks.

Copyright © The Boeing Company. See title page for details.

Display System Information Sources

Air Data Inertial Reference System (ADIRS)

The ADIRS produces flight data such as position, speed, altitude and attitude for the flight displays, flight management computers, flight controls, engine controls and all other systems requiring inertial and air data.

The major components of the ADIRS are:

- two air data inertial reference units (ADIRUs)
- four air data modules (ADMs)
- one inertial system display unit (ISDU)
- one dual mode select unit (MSU)
- six static ports
- three pitot probes
- two alpha vanes
- one total air temperature probe

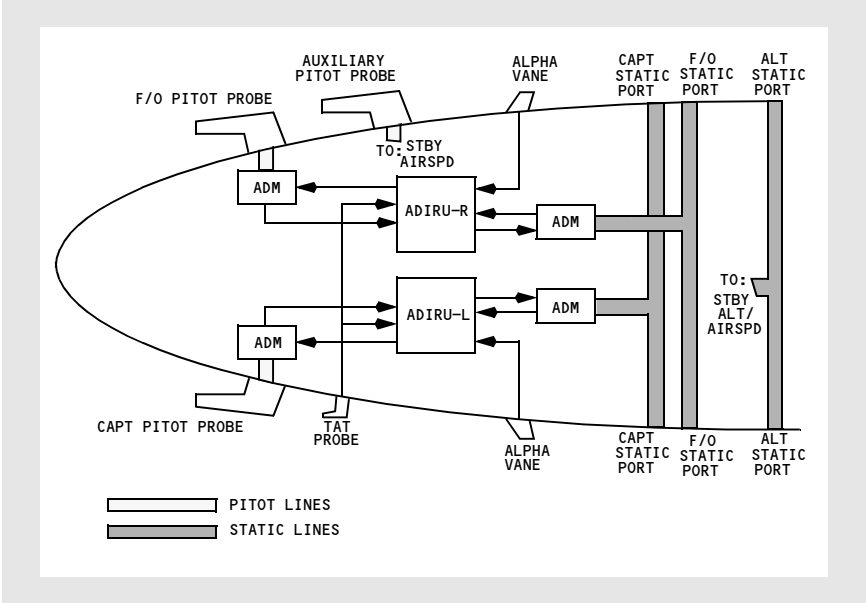

Air Data Inertial Reference Unit (ADIRU)

The ADIRUs provide inertial position and track data to the FMC as well as attitude, altitude and airspeed data to the displays. The ADIRUs process information measured by internal gyros and accelerometers, and from air data module inputs, the alpha vanes and other systems.

The ADIRUs are described in Chapter 11, Flight Management, Navigation.

Copyright © The Boeing Company. See title page for details.

Air Data

The pitot static system is comprised of three separate pitot probes and six flush static ports. Two pitot probes and four static ports interface with the air data modules. The remaining auxiliary pitot probe and alternate static ports provide pitot and static pressure to the standby instruments. The auxiliary pitot probe is located on the first officer's side of the airplane.

The air data modules convert pneumatic pressure to electrical signals and send these data to the ADIRUs. Each pitot air data module is connected to its on–side pitot probe; there is no cross connection. The air data module connected to the Captain's pitot probe sends information to the left ADIRU, while the air data module connected to the First Officer's pitot probe sends information to the right ADIRU. The remaining air data modules are located at the balance centers of the Captain's and First Officer's static ports. The air data module connected to the Captain's static ports sends information to the left ADIRU, while the air data module connected to the First Officer's static ports sends information to the right ADIRU.

Angle–of–Attack

There are two alpha vanes, one located on each side of the forward fuselage. The vanes measure airplane angle–of–attack relative to the air mass.

Total Air Temperature

A total air temperature probe is mounted outside the airplane to sense air mass temperature. The temperature sensed by the probe is used by the ADIRUs to compute total air temperature.

Static Air Temperature

Static air temperature, displayed on the CDU PROGRESS page, comes from the ADIRUs, using total air temperature probe information.

Standby Flight Instruments

The standby flight instruments include:

- standby magnetic compass
- integrated standby flight display
- standby radio magnetic indicator

Standby Magnetic Compass

A standard liquid–damped magnetic standby compass is provided. A card located near the compass provides heading correction factors.

Copyright © The Boeing Company. See title page for details.

DO NOT USE FOR FLIGHT

Integrated Standby Flight Display (ISFD)

The ISFD displays attitude, airspeed, altitude, ILS, and heading information. It is connected directly to the auxiliary pitot and alternate static sources. ILS information is provided by the No. 1 ILS receiver. The display receives its heading information from the same source as the captain's primary flight display.

Note: The standby magnetic compass must be used to validate heading information.

The battery bus powers the ISFD. Selecting the battery switch ON activates the ISFD. After 10 seconds, an initialization sequence begins that requires 90 seconds to complete. ATT and INIT 90s messages are displayed during initialization. Upon completion of the initialization sequence, attitude information is displayed.

Note: Any change in airplane position during the initialization sequence may result in an inaccurate alignment. Inaccurate alignment is not annunciated and may result in the display of inaccurate attitude prior to, and during flight. Re-initialization can only be accomplished through maintenance action.

Detection of a momentary out-of-limit ISFD condition may cause the attitude display to blank and the WAIT ATT or ATT:RST message to display. Operation of the attitude reset switch is required in response to the ATT:RST message. This will reset the horizon line with the airplane symbol.

Note: Operation of the attitude reset switch will not correct an inaccurate alignment.

On the ground, operation of the attitude reset switch must be performed with the airplane stationary. In flight, operation of the attitude reset switch must be performed with the airplane in wings level, non-accelerated flight. During the process, the ATT 10s message displays. Failure to maintain straight and level flight for 10 seconds may result in an ATT:RST message. If the reset attempt is unsuccessful, the ATT:RST message remains displayed and the ISFD does not enter normal operation.

Standby Radio Magnetic Indicator

The standby radio magnetic indicator (RMI) displays magnetic heading and VOR/ADF bearing to the station. The RMI is powered by the AC standby bus and remains powered after the loss of all normal AC power as long as battery power is available.

Copyright © The Boeing Company. See title page for details.

Clocks

[Option - Smiths 60B00303-105]

Two electronic clocks are installed, with two digital displays on each clock. Either Greenwich Mean Time (GMT) or local time may be set on the upper time display. The lower ET/CHR display is used for either elapsed time or the chronograph. Separate controls are provided for each display.

Clock Switch

[Option - Remote clock switch]

A remote clock switch, on the glareshield panel, operates the same as the chronograph (CHR) control.

Flight Recorder

The flight recorder provides a permanent record of selected operational and systems information such as altitude, heading, acceleration, and airspeed. The recorder is housed in a sealed, fire–resistant container located behind an access door in the aft cabin ceiling.

Operational and systems information is automatically recorded whenever the flight recorder is powered. On the ground, the recorder begins operating when one of the engines is operating. In the air, the flight recorder is powered even with both engines shut down as long as APU electrical power is available.

Aircraft Condition Monitoring System (ACMS)

[Option]

The DFDAU receives signals representing certain flight condition and airplane systems' operating performance and converts them to a digital form for recording on the DFDR.

The DFDR records airplane systems and flight data for at least the last 25 hours of operation. The DFDR is located in the aft fuselage area.

[Option - Quick Access Recorder (QAR) lights]
A indicator on the Aft Overhead Panel illuminates when the quick access recorder is full. The QAR is located in the electronics equipment bay.

Copyright © The Boeing Company. See title page for details.

DO NOT USE FOR FLIGHT

Intentionally
Blank

Copyright © The Boeing Company. See title page for details.

DO NOT USE FOR FLIGHT

Introduction

The common display system (CDS) supplies information to the flight crew on six flat panel liquid crystal display units (DUs). The outboard and inboard display units present all primary flight and navigation information. Primary engine indications are normally displayed on the upper DU. Secondary engine indications or system data are normally displayed on the lower DU.

Detailed information on the following subjects is found in other sections of this chapter:

- Primary Flight Display (PFD)– Section 31
- Navigation display (ND)– Section 41.

Display Brightness Control

Adjustment of the brightness of each DU is controlled by a combination of light sensors and brightness controls. Two remote light sensors, located left and right on the top of the glareshield, compensate for the amount of ambient light entering through the flight deck windows and adjust the brightness of the related DUs. Each DU also has an integral light sensor which provides automatic control of brightness as a function of ambient light striking the face of the DU. Brightness controls are used by the pilot to further adjust the intensity of each display unit.

Copyright © The Boeing Company. See title page for details.

DO NOT USE FOR FLIGHT

DISPLAYS SOURCE Panel

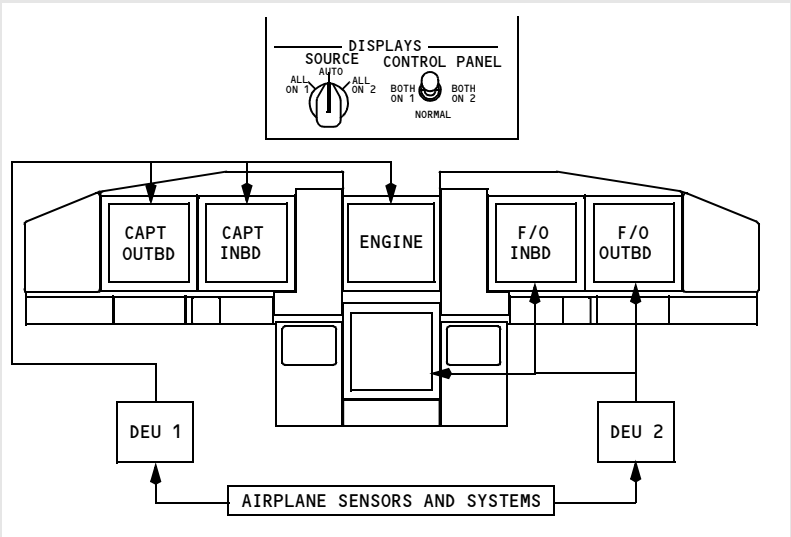

The DISPLAYS source panel, located on the forward overhead panel, contains source controls for the display electronic units (DEUs) and EFIS control panels.

Two DEUs receive data from sensors and airplane systems and supply data to the DUs. During normal operation, with the display SOURCE selector switch in the AUTO position, DEU1 supplies data to the Captain outboard, Captain inboard and upper DUs while DEU2 supplies data to the First Officer outboard, First Officer inboard and lower DUs. If a DEU fails, the remaining DEU automatically supplies data to all six displays. This prevents the loss of navigation information.

The display SOURCE selector, used on the ground for maintenance purposes, allows manual selection of either DEU1 or DEU2 for all six display units. If the displays are automatically or manually switched to a single DEU source, a “DSPLY SOURCE” annunciation illuminates on both pilot’s primary flight display.

The CONTROL PANEL select switch determines which EFIS control panel controls the pilots’ display functions. With the switch positioned to either BOTH ON 1 or BOTH ON 2, the selected EFIS control panel provides inputs for both sets of pilot displays. When in the NORMAL position, a “DISPLAYS CONTROL PANEL” annunciation illuminates below the altitude indication showing a failure of the associated EFIS control panel.

Copyright © The Boeing Company. See title page for details.

EFIS Control Panels

The EFIS control panels, located on the glareshield, controls display options, mode, and range for the related pilot's displays. Refer to the PFD and ND sections of this chapter for detailed information.

If an EFIS control panel fails, the displays can be controlled by the remaining control panel.

Display Select Panel

The display select panel, located on the left and right forward panels, controls the displays on the inboard, outboard and lower DUs. Normal operation is all selectors in the NORMAL position. The pilots' outboard and inboard DUs display primary flight and navigation data and the upper DU displays primary engine data and fuel quantity.

If a DU fails, automatic display switching ensures critical information remains available to the pilots at all times. If the system detects an operational failure on an outboard DU, the primary flight display automatically moves to the inboard DU and the failed outboard DU blanks. The OUTBD/INDB selector no longer has control over that display unit. If the upper DU fails, the engine display automatically moves to the lower DU.

Manual control of display formats is provided for undetected failures. The outboard rotary switch on the display select panel controls the formats displayed on either the outboard or inboard DUs. The inboard rotary switch controls the display format shown on the lower DU.

Copyright © The Boeing Company. See title page for details.

Display Selection and Control Examples

The following examples show display selections.

Normal Display Configuration

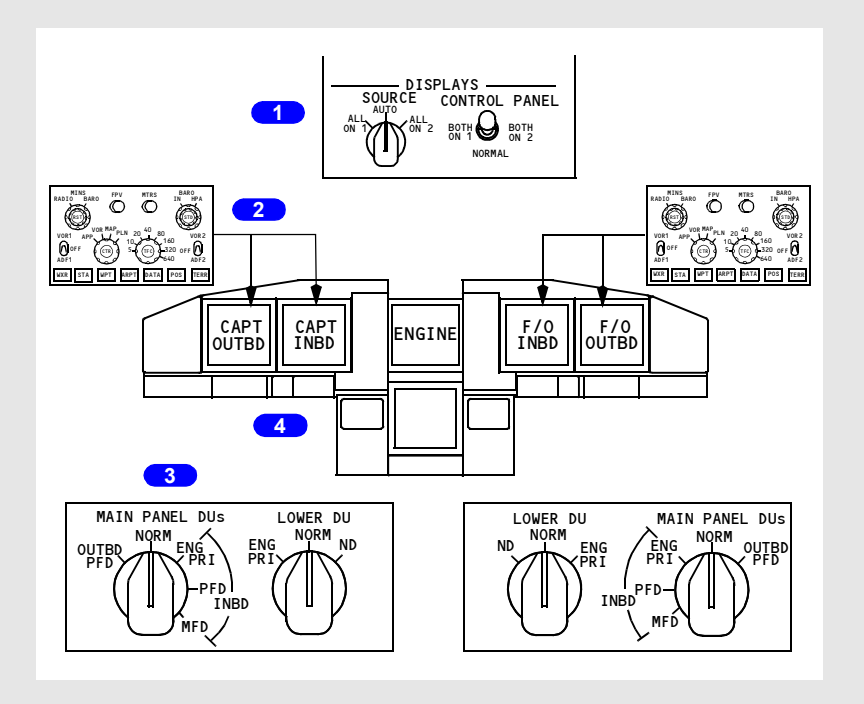

1 DISPLAYS Source Panel

The display SOURCE select switch is in AUTO and the CONTROL PANEL select switch is in NORMAL.

2 EFIS Control Panel

The left EFIS control panel controls the Captain outboard and inboard display units. The right EFIS control panel controls the First Officer outboard and inboard display units.

3 Display Select Panel

All selectors are in NORMAL.

4 Display Units

The pilots' outboard and inboard DUs show the normal PFD/ND displays.

Copyright © The Boeing Company. See title page for details.

Display Unit Failure Automatic Switching

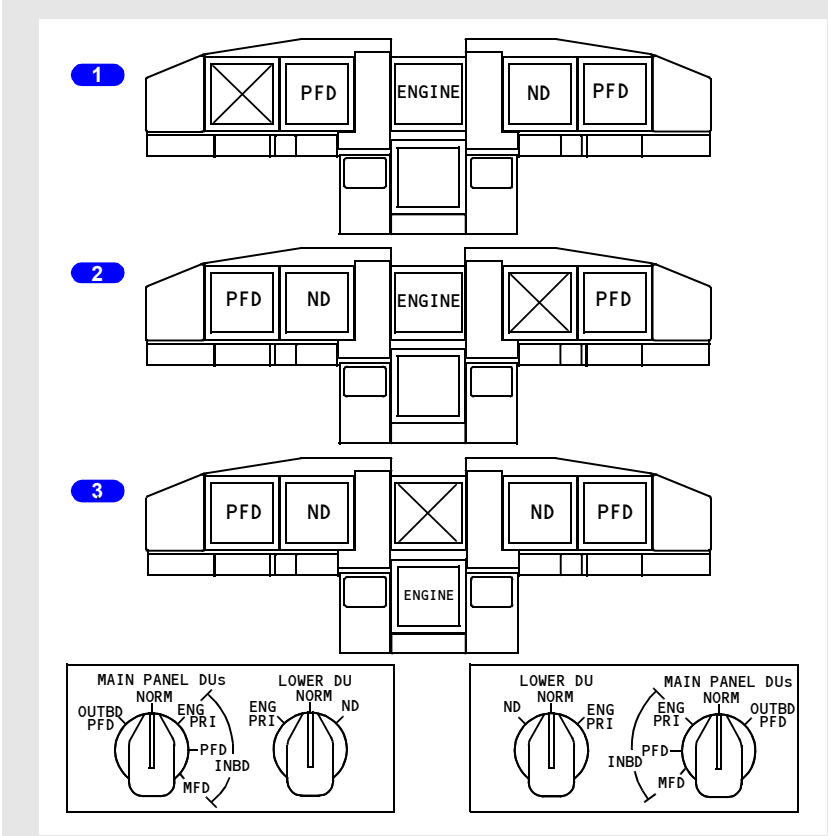

1 Outboard Display Unit Fails

If an outboard display unit fails, the PFD is automatically displayed on the inboard display unit and the outboard display unit blanks.

2 Inboard Display Unit Fails

If an inboard display unit fails, the PFD format remains displayed on the outboard display unit and the inboard display unit blanks.

Copyright © The Boeing Company. See title page for details.

DO NOT USE FOR FLIGHT

3 Upper Display Unit Fails

If the upper display unit fails, the primary engine display automatically moves to the lower display unit and the upper display unit blanks. If the secondary engine display is already on the lower display unit, a compact engine display is then displayed.

Note: There is no automatic switching for a lower DU failure.

Copyright © The Boeing Company. See title page for details.

EFIS Control Panel

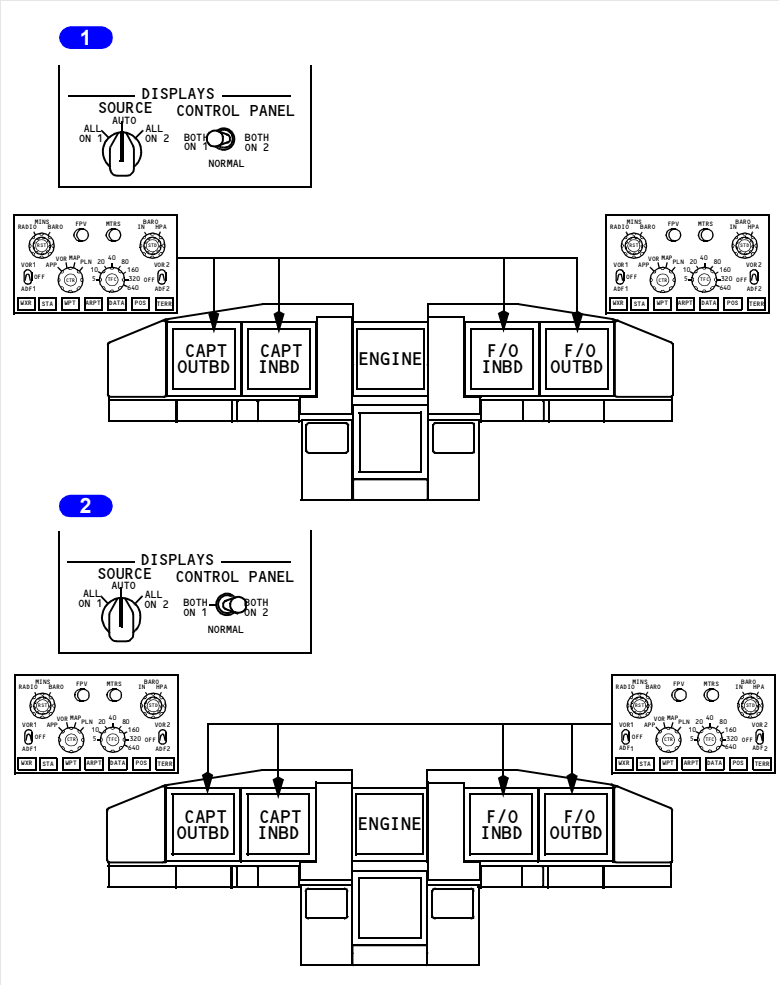

1 CONTROL PANEL Select Switch BOTH ON 1

The left EFIS control panel controls both pilots' outboard and inboard display units.

2 CONTROL PANEL Select Switch BOTH ON 2

The right EFIS control panel controls both pilots' outboard and inboard display units.

Copyright © The Boeing Company. See title page for details.

DO NOT USE FOR FLIGHT

Outboard Display Switching

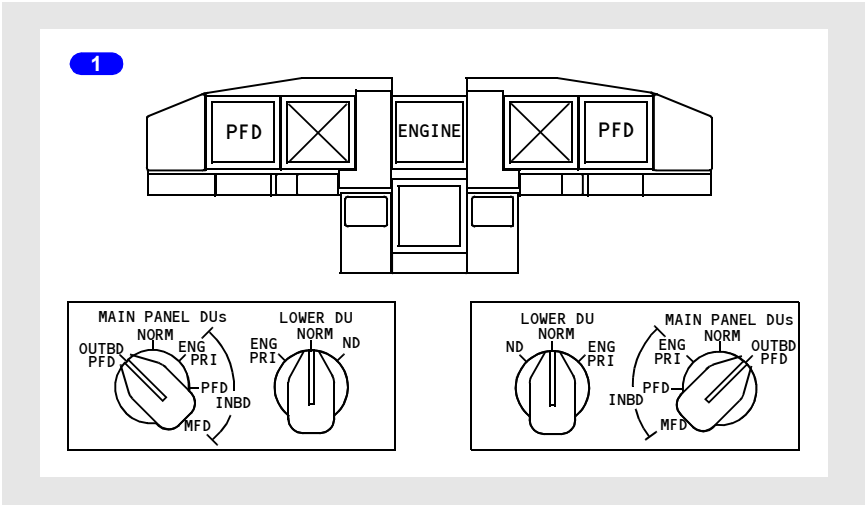

1 MAIN PANEL DUs Switch to OUTBD PFD

If the MAIN PANEL DUs switch is turned to Outboard Primary Flight Display (OUTBD PFD), the PFD format is displayed on the outboard display unit and the inboard display unit blanks.

Copyright © The Boeing Company. See title page for details.

Inboard Display Switching

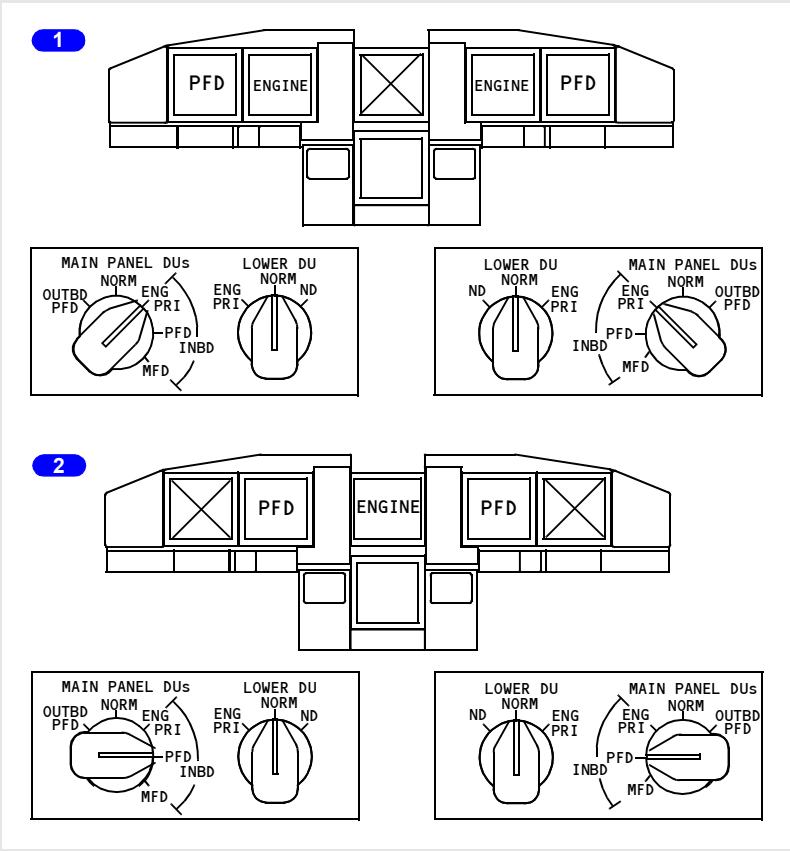

Copyright © The Boeing Company. See title page for details.

DO NOT USE FOR FLIGHT

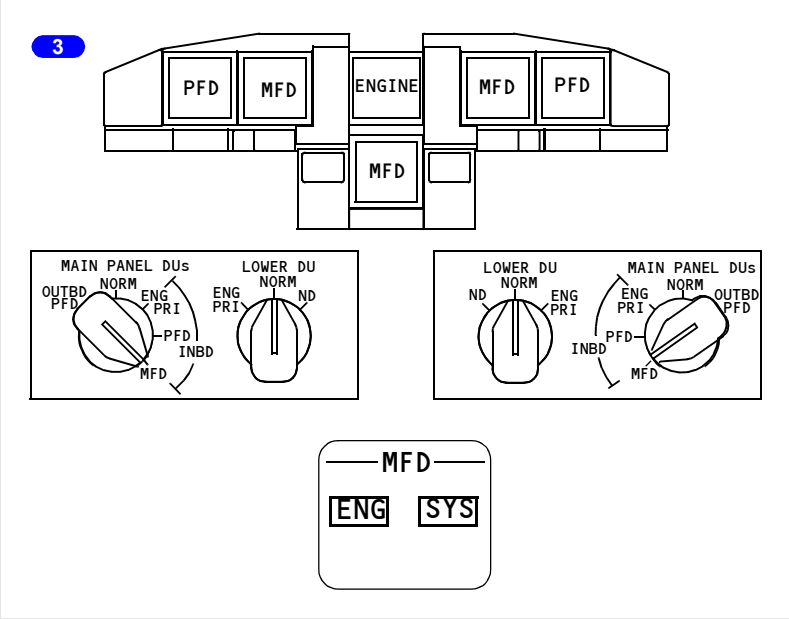

1 MAIN PANEL DUs Switch to INBD ENG PRI

If the MAIN PANEL DUs switch is turned to INBD ENG PRI, the primary engine display moves to the inboard DU, the PFD format is displayed on the outboard DU and the upper DU blanks.

2 MAIN PANEL DUs Switch to INBD PFD

If the MAIN PANEL DUs switch is turned to INBD PFD, the PFD format is displayed on the inboard DU and the outboard DU blanks.

3 MAIN PANEL DUs Switch to MFD

If the MAIN PANEL DUs switch is turned to INBD MFD, the PFD continues to be displayed on the outboard display unit and the inboard display is blank. The system format (SYS) or secondary engine format (ENG) can then be selected to the inboard display unit and lower display unit with the MFD switches on the engine display control unit.

Copyright © The Boeing Company. See title page for details.

Lower Display Switching

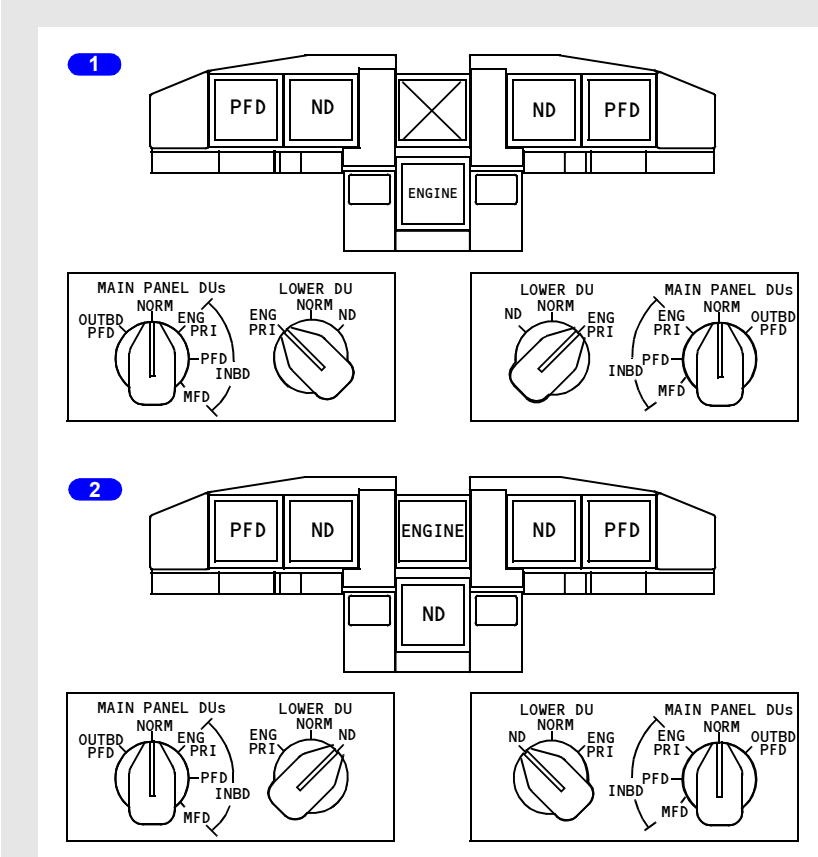

1 LOWER DU Switch to ENG PRI

If the LOWER DU switch is turned to ENG PRI, the engine display moves to the lower DU and the upper DU blanks.

2 LOWER DU Switch to ND

If the LOWER DU switch is turned to ND, the engine display is shown on the upper DU and the navigation display is shown on the lower DU. When the MFD ENG switch is selected, the compact engine display is shown on the upper DU.

Copyright © The Boeing Company. See title page for details.

DO NOT USE FOR FLIGHT

Display System Information Sources

Air Data Inertial Reference System (ADIRS)

The ADIRS produces flight data such as position, speed, altitude and attitude for the flight displays, flight management computers, flight controls, engine controls and all other systems requiring inertial and air data.

The major components of the ADIRS are:

- two air data inertial reference units (ADIRUs)
- four air data modules (ADMs)
- one inertial system display unit (ISDU)
- one dual mode select unit (MSU)
- six static ports
- three pitot probes
- two alpha vanes
- one total air temperature probe.

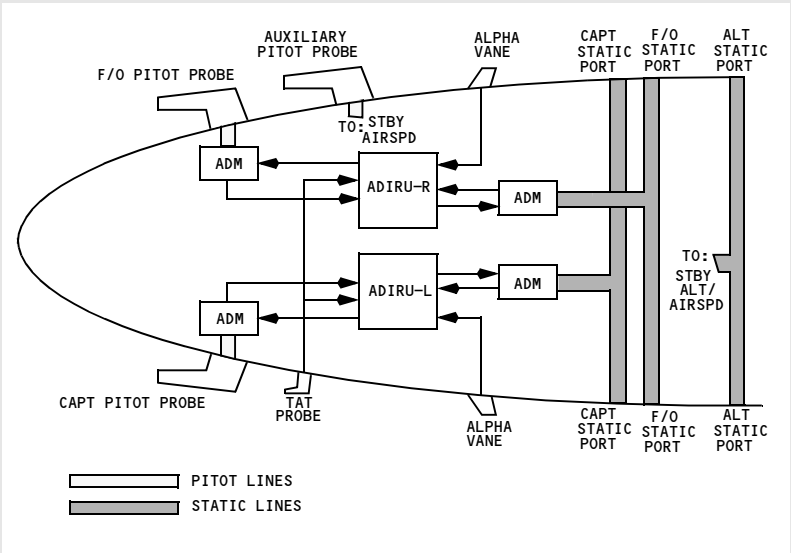

Air Data Inertial Reference Unit (ADIRU)

The ADIRUs provide inertial position and track data to the FMC as well as attitude, altitude and airspeed data to the displays. The ADIRUs process information measured by internal gyros and accelerometers, and from air data module inputs, the alpha vanes and other systems.

The ADIRUs are described in Chapter 11, Flight Management, Navigation.

Copyright © The Boeing Company. See title page for details.

Air Data

The pitot static system is comprised of three separate pitot probes and six flush static ports. Two pitot probes and four static ports interface with the air data modules. The remaining auxiliary pitot probe and alternate static ports provide pitot and static pressure to the standby instruments. The auxiliary pitot probe is located on the first officer's side of the airplane.

The air data modules convert pneumatic pressure to electrical signals and send these data to the ADIRUs. Each pitot air data module is connected to its on–side pitot probe; there is no cross connection. The air data module connected to the Captain's pitot probe sends information to the left ADIRU, while the air data module connected to the First Officer's pitot probe sends information to the right ADIRU. The remaining air data modules are located at the balance centers of the Captain's and First Officer's static ports. The air data module connected to the Captain's static ports sends information to the left ADIRU, while the air data module connected to the First Officer's static ports sends information to the right ADIRU.

Angle–of–Attack

There are two alpha vanes, one located on each side of the forward fuselage. The vanes measure airplane angle–of–attack relative to the air mass.

[Option - Angle of attack indicator]
The primary source of data for the AOA indicator on the PFD is supplied by the ADIRU, with the SMYD as the backup source. The source selection is automatic in the event of primary source failure. Slight differences between the Captain's and FO's indications may be noticed due to sideslip or vane installation errors. These differences could be as large as 2 degrees alpha.

Total Air Temperature

A total air temperature probe is mounted outside the airplane to sense air mass temperature. The temperature sensed by the probe is used by the ADIRUs to compute total air temperature.

Static Air Temperature

Static air temperature, displayed on the CDU PROGRESS page, comes from the ADIRUs, using total air temperature probe information.

Standby Flight Instruments

The standby flight instruments include:

Copyright © The Boeing Company. See title page for details.

- standby magnetic compass
- integrated standby flight display
- standby radio magnetic indicator.

Standby Magnetic Compass

A standard liquid–damped magnetic standby compass is provided. A card located near the compass provides heading correction factors.

Integrated Standby Flight Display (ISFD)

The ISFD displays attitude, airspeed, altitude, ILS, and heading information. It is connected directly to the auxiliary pitot and alternate static sources. ILS information is provided by the No. 1 ILS receiver. The display receives its heading information from the same source as the captain's primary flight display.

Note: The standby magnetic compass must be used to validate heading information.

The battery bus powers the ISFD. Selecting the battery switch ON activates the ISFD. After 10 seconds, an initialization sequence begins that requires 90 seconds to complete. ATT and INIT 90s messages are displayed during initialization. Upon completion of the initialization sequence, attitude information is displayed.

Note: Any change in airplane position during the initialization sequence may result in an inaccurate alignment. Inaccurate alignment is not annunciated and may result in the display of inaccurate attitude prior to, and during flight. Re-initialization can only be accomplished through maintenance action.

Detection of a momentary out-of-limit ISFD condition may cause the attitude display to blank and the WAIT ATT or ATT:RST message to display. Operation of the attitude reset switch is required in response to the ATT:RST message. This will reset the horizon line with the airplane symbol.

Note: Operation of the attitude reset switch will not correct an inaccurate alignment.

On the ground, operation of the attitude reset switch must be performed with the airplane stationary. In flight, operation of the attitude reset switch must be performed with the airplane in wings level, non-accelerated flight. During the process, the ATT 10s message displays. Failure to maintain straight and level flight for 10 seconds may result in an ATT:RST message. If the reset attempt is unsuccessful, the ATT:RST message remains displayed and the ISFD does not enter normal operation.

Copyright © The Boeing Company. See title page for details.

Standby Radio Magnetic Indicator

The standby radio magnetic indicator (RMI) displays magnetic heading and VOR/ADF bearing to the station. The RMI is powered by the AC standby bus and remains powered after the loss of all normal AC power as long as battery power is available.

Clocks

[Option - GPS capable]

Two electronic clocks are installed, with two digital displays on each clock. Universal time coordinated (UTC) time, UTC date, manual time or manual date may be set on the upper time display. The lower ET/CHR display is used for either elapsed time or the chronograph. Separate controls are provided for each display.

Each clock is powered by the hot battery bus when the battery bus is not available. The clock reverts to hot battery bus power when the airplane is powered down. The hot battery bus power keeps the time base but does not provide power for the display or output of clock data and the clock reverts to manual mode. When the airplane is powered up and Global Position System (GPS) data is restored, the clock continues to operate in manual mode and will not automatically display UTC time. UTC time can be manually selected by using the TIME/DATE pushbutton.

Note: When on standby power, the F/O clock display is dim and UTC time is not available.

Clock Switch

[Option - Remote clock switch]

A remote clock switch, on the glareshield panel, operates the same as the chronograph (CHR) control.

Flight Recorder

The flight recorder provides a permanent record of selected operational and systems information such as altitude, heading, acceleration, and airspeed. The recorder is housed in a sealed, fire–resistant container located behind an access door in the aft cabin ceiling.

Operational and systems information is automatically recorded whenever the flight recorder is powered. On the ground, the recorder begins operating when one of the engines is operating. In the air, the flight recorder is powered even with both engines shut down as long as APU electrical power is available.

Copyright © The Boeing Company. See title page for details.

DO NOT USE FOR FLIGHT

Aircraft Condition Monitoring System (ACMS)
[Option]

The DFDAU receives signals representing certain flight condition and airplane systems' operating performance and converts them to a digital form for recording on the DFDR.

The DFDR records airplane systems and flight data for at least the last 25 hours of operation. The DFDR is located in the aft fuselage area.

[Option - Quick Access Recorder (QAR) lights]
A indicator on the Aft Overhead Panel illuminates when the quick access recorder is full. The QAR is located in the electronics equipment bay.

Copyright © The Boeing Company. See title page for details.

Introduction

The head-up display (HUD) system uses electronics and optics to calculate and display flight information. The flight information is displayed as flight symbols which project on to a transparent glass screen in front of the pilot. The flight symbols overlay and combine with the outside view through window No. 1.

The HUD system can be used during manual flight operations, or with the AFDS engaged during automatic flight operations. When used manually, internal HUD guidance is used to control flight symbology and is independent of any AFDS derived or displayed flight director guidance.

HUD system components, combined with other airplane systems, produce flight symbology displayed in four distinct modes of operation. Each mode of operation has unique characteristics, and is intended to be used during a particular phase of flight based on system capability and meteorological conditions. TCAS resolution advisories and system failure flags are also displayed when active. Detailed information on display symbology is found in Section 42 of this chapter.

The HUD system consists of the following components:

- HUD computer
- Overhead unit (OHU)
- Combiner
- Control panel
- Annunciator panel

[Option - Model 2350]

- Drive electronics unit

HUD Computer

The HUD computer receives input signals from aircraft sensors and equipment and converts this data to symbology for display on the combiner. The computer also evaluates system and approach performance through extensive Built-In Test Equipment (BITE), input validation, and approach monitor processing. If an out of tolerance condition exists, the applicable annunciation appears on the combiner and/or annunciator panel. Internal components control the following functions:

- Guidance control
- Shape and position of flight symbols
- Airplane sensor status
- HUD system status
- HUD system mode.

Copyright © The Boeing Company. See title page for details.

Drive Electronics Unit

[Option - Model 2350]

The Drive Electronics Unit receives signals from the HUD computer and conditions these signals to drive the projector in the OHU. Power supplies in the Drive Electronics Unit supply power to the Drive Electronics Unit, OHU and Combiner.

Overhead Unit (OHU)

The OHU contains the CRT and projection optics to display flight symbology on the combiner. Electronic circuitry within the OHU controls display intensity and system monitoring.

Combiner

The combiner optically combines flight symbology from the OHU, with the pilot's view through window No.1. It acts as a wavelength selective mirror, reflecting only the flight symbology color (green) and lets other colors pass through.

The combiner alignment detector monitors the angular position of the combiner. The HUD computer uses the detector to verify correct combiner position for normal viewing. If the combiner is not in the correct position, and the HUD is in the IMC or VMC modes, the ALIGN HUD message appears on the combiner.

The combiner glass element has a break away safety feature which allows the element to rotate forward from the normal position, in case of abnormal deceleration.

Control Panel

The HUD control panel is used to select and display modes of operation and enter data. Display intensity is controlled by panel switches or by an ambient light sensor located on the upper left corner of the panel.

Annunciator Panel

The annunciator panel consists of lights to indicate HUD system status annunciations during AIII mode approach and landing operations.

Modes of Operation

The HUD system provides a mode–selectable display on the combiner. The modes are:

- PRI (Primary) - used for most HUD operations
- AIII - primarily used for manually flown CAT II or IIIa ILS approach and landing operations

Copyright © The Boeing Company. See title page for details.

- IMC - used for AFDS autopilot/flight director approaches
- VMC - used for visual approaches.

Primary (PRI) Mode

The primary mode may be used during all phases of flight from takeoff to landing. This can include low visibility takeoff operations utilizing ground roll guidance, all enroute operations and either non-precision or precision approaches to CAT I or II minimums utilizing flight director guidance and/or raw data.

Attitude information is displayed in the form of a horizon line and pitch scales positioned relative to an airplane reference symbol. Airspeed and altitude are displayed in tapes along the left and right edges of the display. A sectored HSI is displayed in flight in the lower center of the display. On the ground, the HSI, flight path and guidance cue are not displayed. These symbols are automatically displayed once the aircraft is in flight.

During takeoff, a TOGA pitch target line and a guidance cue are displayed. The TOGA pitch target line is displayed as a horizontal dash line initially positioned at the top of the display. As the pitch attitude increases during rotation, its vertical position relative to the airplane reference symbol is adjusted to display the pitch command from the Captain's flight director. Initially, the flight director guidance cue is displayed when the airplane reference is within 2 degrees of the TOGA pitch target line or when climbing through 50 feet radar altitude, whichever occurs first. The TOGA pitch target line remains until the TO/GA mode is exited. The flight director guidance cue is displayed throughout flight when the Captain's flight director is selected on and both pitch and roll commands remain valid.

A full time slip-skid symbol is displayed as part of the roll scale. During any takeoff (after rotation) or go-around (below 1000 feet), additional slip-skid symbols are displayed to enhance lateral control in the event of an engine failure. These two additional symbols are displayed relative to the airplane reference and the flight path symbols and are removed above 1500 feet.

AFDS engaged modes, autothrottle modes and autopilot status is indicated across the top of the display similar to the flight mode annunciator display. Navigation information is displayed dependent on the selected navigation source and active AFDS mode. During LNAV operations, vertical and lateral deviations are similarly displayed based on FMC data. During ILS/VOR operations, course deviation is displayed within the HSI. Glideslope data is presented on a glideslope deviation scale adjacent to the altitude tape.

If the HUD is in a mode other than primary, depressing a TO/GA switch activates the primary mode independent of the standby mode indicated on the HUD control panel.

Copyright © The Boeing Company. See title page for details.

Primary Mode - Low Visibility Takeoff

The primary mode includes special symbology used for a low visibility takeoff. The display supports visual runway centerline tracking and enhances situational awareness.

Note: Approval must be obtained from the appropriate regulatory authority prior to conducting HUD low visibility takeoff operations.

The low visibility takeoff display incorporates a ground roll reference symbol, ground roll guidance cue and a ground localizer line (if an ILS frequency is tuned on both nav receivers). The HUD derived ground roll guidance cue provides lateral guidance relative to the ground roll reference symbol to track the localizer. The ground localizer line provides raw localizer information any time the aircraft is on the ground and the Captain's navigation receiver is tuned to a localizer frequency. The localizer deviation is presented relative to the selected course mark on the horizon.

Primary Mode - Approach and Landing

[Option - Model 2350]
If the primary mode is used for an approach and landing, flight director guidance and navigation raw data is displayed. Once on the ground, the ground localizer line is displayed (if an ILS frequency is tuned on both nav receivers) to enhance centerline tracking.

AIII Approach Mode
[Option - Model 2350]

The HUD AIII mode is specifically designed for manual ILS approach and landing operations to CAT II or CAT IIIa minimums. Altitude and airspeed tape displays are replaced with digital values. The HSI is also replaced with ILS raw data displayed in proximity to the flight path group around the center of the display. In the AIII mode, flight path guidance is provided by the guidance cue which is derived from internal approach and landing guidance algorithms, and is independent of any AFDS derived or displayed flight director guidance.

Note: Approval must be obtained from the appropriate regulatory authority prior to conducting HUD Cat II or CAT IIIa operations.

AIII mode is dependent on the availability of all required systems and ILS approach criteria. Because of these requirements, the AIII mode is not identified as a selectable standby mode until these requirements are met. AIII capability is displayed on the control panel at any time, and on the combiner after LOC and G/S capture in the PRI mode.

Copyright © The Boeing Company. See title page for details.

ILS approach criteria requirements are satisfied when:

- Both VHF navigation receivers tuned to an ILS frequency, and
- VHF #1 or VHF #2 localizer deviation is less than approximately 1/4 dot and glideslope deviation is less than approximately 1 and 1/4 dots for at least five seconds, and
- The difference between the airplane's magnetic track and the captain's selected course is less than 15 degrees, and
- Radio altitude is greater than 500 feet.

Note: Once these criteria have been satisfied, subsequent deviations outside the criteria prior to AIII mode selection, will result in a loss of ability to select the AIII mode.

Once the AIII mode is active, the AIII mode symbology and related annunciations are displayed on the combiner, the control panel display, and the HUD annunciator panel.

Any sensor or equipment condition that results in a loss of AIII capability will cause a boxed NO AIII annunciation displayed on the combiner and on the control panel display. The first officer's AIII annunciation is also extinguished. The annunciation will remain until another mode is selected or AIII capability is regained.

Below 500 feet radar altitude, with a loss of AIII capability or if the approach or flare performance does not ensure a safe touchdown within the required touchdown zone, an APCH WARN annunciation will be displayed on the combiner and on the HUD annunciator panel.

IMC Mode

The IMC mode is an alternate approach mode primarily intended for autopoilot approaches. Like the PRI mode, the IMC mode guidance cue utilizes AFDS derived guidance. The guidance cue is displayed when the Captain's flight director is active and both pitch and roll commands are valid.

Approach symbology format for the IMC mode is similar to the AIII approach mode. Altitude and airspeed data is displayed as digital values and navigation raw data is displayed in close proximity to the flight path vector.

VMC Mode

The VMC mode is intended for visual approach operations. No flight director or HUD guidance is displayed. The flight path vector is used to control the approach to the runway.

Approach symbology format for the VMC mode is similar to the AIII and IMC modes. However, navigation data is not displayed.

Copyright © The Boeing Company. See title page for details.

The proper mechanical alignment of the combiner is critical during visual operations. Combiner position is monitored by the combiner alignment detector, to determine if the combiner is within allowable position tolerances while in the IMC or VMC mode. If its position is out of tolerance, an ALIGN HUD message is displayed on the combiner. Elimination of the message is accomplished by gently pushing the combiner in the breakaway direction and releasing. This allows the combiner to reposition itself. If the message cannot be removed, the IMC or VMC mode should not be used.

TCAS Resolution Advisory

TCAS resolution advisories are displayed as preventive and corrective symbols, and are similar to the pitch commands displayed on the attitude indicator.

Preventive advisories do not require any crew action, but indicate an unsafe zone, displayed as a double lined bracket. On the unsafe side of the bracket, two angled lines are extended from the corners. The position of the bracket is determined by TCAS, and represents the vertical flight path position that is safe.

Corrective advisories require positive action by the crew and are indicated by a double lined box. The position of the box is determined by the vertical speed requirements from TCAS, and represents the vertical flight path position that is safe.

For additional information on TCAS, refer to Chapter 15, Warning Systems.

Failure Flags and Data Source Annunciations

Failure flags are displayed for invalid sensor status and miscompares between similar parameters. These flags are generally indicated by boxed annunciations for the affected parameters, and in the case of failure, the removal of all symbols related to the fault. In some cases, symbols are removed as a result of other symbols being removed due to a fault.

Flags associated with a miscompare of similar data result in the display of a flag without the removal of the related symbols. The flag indicates the applicable data should be verified by cross-checks with other flight deck displays.

Data source annunciations are provided in a few cases to annunciate the source of displayed data when other than normal.

Dashes replace numbers if there is no computed data.

Copyright © The Boeing Company. See title page for details.

DO NOT USE FOR FLIGHT

Introduction

The electronic flight instrument system (EFIS) presents a dynamic color display of the parameters necessary for flight path control. The displays provide the following information:

- flight mode annunciation
- airspeed
- attitude
- steering information
- instrument landing system display
- approach minimums
- radio altitude
- altitude
- vertical speed
- GPWS annunciations
- TCAS indications.

Failure flags are displayed for airplane system failures. Displayed information is removed or replaced by dashes if no valid information is available to the display system (because of out–of–range or malfunctioning navigation aids). Displays are removed when a source fails or when no system source information is available.

Flight mode annunciations are described in Chapter 4, Automatic Flight.

Airspeed

Airspeed is displayed on a round dial Mach/airspeed indicator, or MASI. Current airspeed is displayed by an airspeed pointer and digital counter. Current Mach number is digitally displayed when the Mach number is greater than 0.40. Target airspeed is shown by the magenta airspeed cursor.

Takeoff and landing reference speeds and flap maneuvering speeds are shown along the circumference of the indicator. Maximum and minimum airspeeds are also displayed.

Attitude

The attitude indicator displays airplane pitch and roll attitude referenced to the horizon.

Pitch attitude is displayed by an airplane symbol against a pitch scale. The pitch scale is in 2.5 degree increments.

A pointer indicates bank angle in increments of 10, 20, and 30 degrees. Single marks indicate 45 and 60 degrees of bank. A small rectangle under the bank angle pointer indicates slip and skid conditions. Bank angle is also represented by the attitude of the airplane symbol against the horizon line and pitch scale.

Copyright © The Boeing Company. See title page for details.

[Option - PLI pop-up]
A pitch limit indication is displayed at all times when the flaps are not up, or when flaps are up and airspeed approaches stick shaker activation for existing flight conditions.

Steering Indications

[Option - Split axis command bars]
Flight director pitch and roll bars are displayed when the related flight director switch is on. Pitch and roll commands are displayed independently.

[Option - Flight path vector]
The flight path vector (FPV) symbol represents airplane flight path angle vertically and drift angle laterally. The flight path vector is displayed on the attitude indicator when the EFIS control panel FPV switch is selected on.

The FPV symbol is displayed in two brightness levels. The FPV symbol is displayed dim when either the flight director or a TCAS resolution advisory is displayed.The FPV symbol is displayed bright when the flight director is off and there is no TCAS resolution advisory displayed.

Instrument Landing System Indications

ILS glide slope and localizer deviation are provided.

The glide slope pointer and scale appear on the right side of the attitude indication when a valid signal is received. The scale turns amber and the pointer flashes to indicate an excessive glide slope deviation. The pointer is not displayed when the glide slope signal is unusable or when the track and the front course on the mode control panel differ by more than 90 degrees (backcourse).

The localizer pointer and scale appear at the bottom of the attitude indicator when a valid signal is received. When the course deviation is slightly more than one–half dot and the localizer mode is engaged and track is within 5 degrees of the MCP selected course, the scale automatically expands. At low radio altitudes, with autopilot or flight director engaged, the scale turns amber and the pointer flashes to indicate excessive deviation. Below 1,000 feet AGL, with LNAV engaged and LOC armed, the localizer scale turns amber and the pointer flashes if the localizer is not captured.

Each pilot’s deviation alerting system self-tests upon becoming armed at 1500 feet radio altitude. This self-test generates a two second LOC and G/S deviation alerting display on each attitude indicator.

Copyright © The Boeing Company. See title page for details.

[Option - Rising runway]
Below 2500 feet radio altitude, with the localizer pointer in view, a rising runway symbol comes into view. The symbol provides lateral guidance. At 200 feet radio altitude, the symbol rises toward the airplane symbol.

Approach Minimums

[Option - Radio altitude below ADI]
The selected radio altitude set on the EFIS control panel is displayed near the bottom right of the attitude indicator. The barometric approach minimums is displayed as a marker on the altimeter.

Radio Altitude

[Option - Radio altitude below ADI, round dial]
The current radio altitude is displayed near the bottom right of the attitude indicator when radio altitude is below 2,500 feet AGL. When between 1000 feet and 2500 feet AGL, the readout is digital. When below 1000 feet AGL, the readout is displayed in a round dial format. The display turns amber and the circumference flashes for 3 seconds as the radio altitude descends through the selected minimum altitude. The display changes back to white after one of the following occurs:

- when passing the selected minimum altitude plus 75 feet during go–around
- at touchdown
- after pressing the RST switch on the EFIS control panel.

Radio Altitude Alert

[Option - 2500 ft height alert]
The altitude alert is triggered and “ALT” is shown above the radio altitude display when radio altitude is less than or equal to 2500 feet AGL.

Altitude

Altitude is displayed on a round dial altimeter. Current altitude is displayed by an altitude pointer and a digital readout. A green reference altitude marker indicates the barometric minimums set on the EFIS control panel.

When meters is selected on the EFIS control panel, current altitude in meters is shown above the altitude window and the metric altitude equivalent of the selected MCP altitude is displayed above the altimeter. Metric readouts are not available in the compact EFIS mode.

Copyright © The Boeing Company. See title page for details.

The current barometric reference is displayed in either inches of mercury or hectopascals as selected on the EFIS control panel.

Vertical Speed

Vertical speed is indicted by a vertical speed pointer. The pointer depicts rate of climb or descent from 0 to 6000 feet.

Traffic Alert and Collision Avoidance (TCAS) Indications

[Option - VSI TCAS advisory]
TCAS resolution advisories are displayed on the attitude indicator and vertical speed indicator.

Refer to Chapter 15, Warning Systems.

GPWS Warnings

GPWS warnings are displayed in large capital letters on the attitude indicator. Refer to Chapter 15, Warning Systems.

Copyright © The Boeing Company. See title page for details.

Introduction

The primary flight displays (PFDs) present a dynamic color display of all the parameters necessary for flight path control. The displays provide the following information:

- flight mode annunciation
- airspeed
- altitude
- vertical speed
- attitude
- steering information
- radio altitude
- instrument landing system display
- approach minimums
- heading/track indications
- TCAS indications
- GPWS annunciations.

Failure flags are displayed for airplane system failures. Displayed information is removed or replaced by dashes if no valid information is available to the display system (because of out–of–range or malfunctioning navigation aids). Displays are removed when a source fails or when no system source information is available.

Flight mode annunciations are described in Chapter 4, Automatic Flight.

Airspeed

[Option - Without groundspeed displayed]
Airspeed is displayed on a tape and in a digital window on the left side of the PFD. The current Mach number is digitally displayed below the airspeed tape when the current Mach number is greater than 0.40. An airspeed trend vector indicates predicted airspeed in 10 seconds. Selected airspeed is displayed above the airspeed tape.

[Option - With groundspeed displayed]
Airspeed is displayed on a tape and in a digital window on the left side of the PFD. The current Mach number is digitally displayed below the airspeed tape when the current Mach number is 0.40 Mach or above. Ground speed is displayed when airspeed decreases below 0.40 Mach. An airspeed trend vector indicates predicted airspeed in 10 seconds. Selected airspeed is displayed above the airspeed tape.

Takeoff and landing reference speeds and flap maneuvering speeds are shown along the right edge of the airspeed tape. Maximum and minimum airspeeds are also displayed along the right edge of the airspeed tape.

Copyright © The Boeing Company. See title page for details.

Attitude

The attitude indication displays the airplane pitch and roll attitude referenced to the horizon.

Pitch attitude is displayed by an airplane symbol against a pitch scale. The pitch scale is in 2.5 degree increments.

A pointer indicates bank angle in increments of 10, 20, and 30 degrees. Single marks indicate 45 and 60 degrees of bank. A small rectangle under the bank angle pointer indicates slip and skid conditions. Bank angle is also represented by the attitude of the airplane symbol against the horizon line and pitch scale.

[Option - PLI pop-up]
A pitch limit indication is displayed at all times when the flaps are not up, or when flaps are up and airspeed approaches stick shaker activation for existing flight conditions.

Angle of Attack

[Option - Angle of Attack Indicator]

The Angle of Attack (AOA) indicator displays aircraft body angle of attack, stick shaker angle of attack, and the appropriate range of approach angle of attack. The indicator is located in the upper-right corner of the PFD, above the ADI.

If the AOA signal is determined to have failed or is invalid when ground speed is greater than 80 knots, the AOA indicator will be blanked and replaced with a fail flag.

During normal operation, the approach reference band moves with flap handle position. When the flap handle is in a landing flap detent, the band will depict the appropriate range of AOA for a Vref(xx)+5 approach, where Vref(xx) is for the corresponding flap detent position. If the flaps are driven in alternate mode, the band moves depending on actual flap position. If flap position is determined to be invalid, the band is blanked.

If an approach is flown faster than Vref(xx)+5, AOA is lower than normal and could potentially be below the band. If a slower approach is flown, AOA is higher than normal and could be above the band.

Steering Indications

[Option - Integrated cue command bar]
The flight director is displayed when the related flight director switch is on. Pitch and roll commands are combined on a single display.

Copyright © The Boeing Company. See title page for details.

The flight path vector (FPV) symbol represents airplane flight path angle vertically and drift angle laterally. The flight path vector is displayed on the PFD when the EFIS control panel FPV switch is selected on.

The FPV symbol is displayed in two brightness levels. The FPV symbol is displayed dim when either the flight director or a TCAS resolution advisory is displayed.The FPV symbol is displayed bright when the flight director is off and there is no TCAS resolution advisory displayed.

Instrument Landing System Indications

ILS glide slope and localizer deviation, frequency/identification, DME, course, and marker beacon indications are provided.

The approach reference information appears above and to the left of the attitude display. The ILS station identification or frequency, course, and (if available) DME are displayed.

The marker beacon indication (OM – outer marker, IM – inner marker, or MM – middle marker) is displayed in the upper right corner of the attitude display area.

The glide slope pointer and scale appear on the right side of the attitude indication when a valid signal is received. At low radio altitudes, with autopilot or flight director engaged, the scale turns amber and the pointer flashes to indicate an excessive glide slope deviation. The pointer is not displayed when the glide slope signal is unusable or when the track and the front course on the mode control panel differ by more than 90 degrees (backcourse).

The localizer pointer and scale appear at the bottom of the attitude indication when a valid signal is received. When the course deviation is slightly more than one–half dot, the localizer mode is engaged and track is within 5 degrees of the MCP selected course, the scale automatically expands. At low radio altitudes, with autopilot or flight director engaged, the scale turns amber and the pointer flashes to indicate excessive deviation. Below 1,000 feet AGL, with LNAV engaged and LOC armed, the localizer scale turns amber and the pointer flashes if the localizer is not captured.

Each pilot's deviation alerting system self-tests upon becoming armed at 1500 feet radio altitude. This self-test generates a two second LOC and G/S deviation alerting display on each attitude indicator.

[Option - Rising runway]
Below 2500 feet radio altitude, with the localizer pointer in view, a rising runway symbol comes into view. The symbol provides lateral guidance. At 200 feet radio altitude, the symbol rises toward the airplane symbol.

Copyright © The Boeing Company. See title page for details.

Approach Minimums

[Option - Radio altitude above ADI]
The selected radio altitude or barometric approach minimums are set on the EFIS control panel. The radio altitude approach minimum is displayed near the top left of the altitude display and the barometric approach minimums is displayed near the bottom left of the altitude display.

Radio Altitude

[Option - Radio altitude above ADI, round dial]
The current radio altitude is displayed above the upper right corner of the attitude indication area when radio altitude is below 2,500 feet AGL. When between 1000 feet and 2500 feet AGL, the readout is digital. When below 1000 feet AGL, the readout is displayed in a round dial format. The display turns amber when the radio altimeter is below the radio altitude minimums.

Altitude

Altitude is displayed on an altitude tape along the right side of the PFD. It is also shown digitally in a window in the middle of the tape. When meters is selected on the EFIS control panel:

- current altitude in meters is also shown above the altitude window
- selected altitude in meters is displayed above the altitude tape.

Selected altitude is displayed above the altitude tape and is boxed when approaching the selected altitude. Selected altitude is also depicted with a bug on the altitude tape.

[Option - Landing altitude reference bar]
A landing altitude reference bar is displayed along the inner edge of the altitude indication. The reference bar indicates the height above touchdown. A white bar is displayed from 1000 to 500 feet above landing altitude. An amber bar is displayed from 500 feet to the landing altitude.

A landing altitude indication is displayed as a crosshatched area and indicates:

- the FMC landing altitude for destination runway or airport, or
- the landing altitude for departure runway or airport until 400 NM from departure or one–half the distance to destination, whichever occurs first.

The current barometric reference is displayed below the altitude tape in either inches of mercury or hectopascals as selected on the EFIS control panel. A preselected barometric reference can be displayed when STD is displayed.

Copyright © The Boeing Company. See title page for details.

[Option - Altimeter with QFE]
Altitude reference is selectable between QNH and QFE. QNH is the normal operating mode. A description of QFE operation is contained in the CDU Approach Reference Page description in Chapter 11, Flight Management, Navigation.

Vertical Speed

Vertical speed is displayed to the right of the altitude tape with a tape and pointer. Vertical speed is digitally displayed above or below the vertical speed display when vertical speed is greater than 400 feet per minute. It is displayed above with positive vertical speed and below with negative vertical speed. The selected vertical speed bug shows the selected vertical speed when in the AFDS vertical speed (V/S) pitch mode.

Heading/Track Indications

Heading/track information is displayed in the bottom section of the PFD on a section of the compass rose. Current heading is displayed under a pointer at the top of the compass rose. The MCP selected heading is displayed as a bug on the outside of the compass rose and digitally in the left half of the compass rose.

The current heading/track reference (MAG/TRU) is shown in the right half of the compass rose. A line drawn perpendicular to the edge of the compass rose from the invisible center depicts the current airplane track.

Traffic Alert and Collision Avoidance (TCAS) Indications

[Option - VSI TCAS advisory]
TCAS resolution advisories are displayed in the attitude indication and vertical speed indication areas.

Refer to Chapter 15, Warning Systems.

GPWS Warnings

GPWS warnings are displayed in large capital letters between the attitude display and the heading/track compass rose. Refer to Chapter 15, Warning Systems.

Copyright © The Boeing Company. See title page for details.

Intentionally
Blank

Copyright © The Boeing Company. See title page for details.

Introduction

The navigation displays provide a color display of flight progress. The displays consist of the following:

- horizontal situation indicator
- radio distance magnetic indicator
- navigation display with MAP, APP (approach), VOR, and PLN (plan) modes.

The MAP, VOR, and APP modes can be switched between an expanded mode with a partial compass rose and a center mode with a full compass rose.

Horizontal Situation Indicator (HSI)

The HSI provides heading and track data with VOR navigation or ILS approach information. The data are normally displayed on a compass rose with 200 degrees of heading. In the compact EFIS mode, the data are presented on a 360 degree display.

Radio Distance Magnetic Indicator (RDMI)

The RDMI provides the same information as a conventional RDMI.

Navigation Display – MAP Mode

The MAP mode is recommended for most phases of flight.

[Option - Heading-up display]
Presented heading up, this mode shows airplane position relative to the route of flight against a moving map background.

Displayed information can include:

- current track
- selected and current heading
- position trend vector
- range to selected altitude
- map range scale
- ground speed
- true airspeed
- wind direction and speed
- next waypoint distance
- waypoint estimated time of arrival
- selected navigation data points.

Navigation Data Points

Additional navigation facility (STA), waypoint (WPT), airport (ARPT), route progress (DATA) and position (POS) data are available for display in both the expanded and center MAP modes.

Copyright © The Boeing Company. See title page for details.

VOR and Approach Modes

The VOR and APP modes are presented heading up. The VOR and APP modes display track, heading, and wind speed and direction with VOR navigation or ILS approach information.

Plan Mode

The PLN mode is presented true north up. The active route may be viewed using the STEP prompt on the CDU LEGS pages.

Navigation Display Information

Heading

Heading is supplied by air data inertial reference system (ADIRS). The compass rose can be referenced to magnetic north or true north.

Track

Track is supplied by the FMC during normal operation.

Traffic

Traffic information from the TCAS can be displayed on the navigation display when in MAP, Center MAP, APP and VOR modes. TCAS is described in Chapter 15, Warning Systems.

Weather Radar

Weather radar information can be displayed on the navigation display when in MAP, Center MAP, APP and VOR modes. The weather radar system is described in Chapter 11, Flight Management, Navigation.

Failure Flags and Messages

Failure flags are displayed for system failures or invalid information. Indications are removed or replaced by dashes when source system information is not available.

The message EXCESS DATA is displayed if the amount of information sent to the navigation display exceeds the display capability. The message can be removed by:

- reducing the amount of map information
- reducing range, or
- deselecting one or more of the EFIS control panel map switches (STA, WPT, ARPT, DATA, POS).

Copyright © The Boeing Company. See title page for details.

Navigation Display Symbology

The following symbols can be displayed, depending on EFIS control panel switch selections. Colors indicate the following:

- W (white) – present status, range scales
- G (green) – active or selected mode and/or dynamic conditions
- M (magenta) – command information, pointers, symbols, fly–to condition, weather radar turbulence
- C (cyan) – nonactive or background information
- A (amber) – cautions, faults, flags
- R (red) – warnings
- B (black) – blank area, off condition.

Heading, Track, and Speed

[Option - Heading-up display]

SYMBOL	NAME	APPLICABLE MODE(S)	REMARKS
HDG 263 M	Heading orientation (G), current heading (W), heading reference (G), and heading pointer (W)	MAP, MAP CTR, APP, APP CTR, VOR, VOR CTR	Displays HDG as the display orientation, current heading, M or TRU as the heading reference, and points to the heading on the compass rose.
	Selected heading bug (M)	MAP, MAP CTR, APP, APP CTR, VOR, VOR CTR	Displays the MCP–selected heading. A dashed line (M) extends from the marker to the airplane symbol (VOR CTR and APP CTR do not display dashed line).
40	Track line and range scale (W)	MAP, MAP CTR, APP, VOR	Indicates current track.

Copyright © The Boeing Company. See title page for details.

SYMBOL	NAME	APPLICABLE MODE(S)	REMARKS
M OR TRU	Heading/track reference (G), box (W) in TRU, box (A) if TRU displayed in descent	MAP, MAP CTR, APP, APP CTR, VOR, VOR CTR	Indicates heading/track is referenced to magnetic north or true north. On transition from TRU to M, a highlight box is displayed around M for 10 seconds. When TRU is the reference, the highlight box is displayed full time (white).
12 15	Expanded compass (W)	MAP, APP, VOR	Displays 60 degrees of compass rose.
▽	Current heading pointer (W)	MAP, MAP CTR, APP, APP CTR, VOR, VOR CTR	Points to current heading on the compass rose.
GS310	Groundspeed (W)	All	Current ground speed.
TAS312	True airspeed (W)	All	Current true airspeed displayed above 100 knots.
↙ 350°/15	Wind direction/ speed and wind arrow (W)	MAP, MAP CTR, APP, APP CTR, VOR, VOR CTR	Indicates wind speed and direction, with respect to display orientation and heading/track reference. Displayed if wind magnitude is greater than 6 knots and blanked if wind magnitude becomes less than 4 knots. Dashes are displayed until TAS is greater than 101 knots.

Copyright © The Boeing Company. See title page for details.

Radio Navigation

[Option - Full time ADF, VOR course lines displayed, dual ADF]

SYMBOL	NAME	APPLICABLE MODE(S)	REMARKS
VOR 1, 2 ILS 1, 2	System source annunciation (G)	APP, APP CTR, VOR, VOR CTR	Indicates the selected receiver as the display reference.
116.80	ILS/VOR frequency display (G)	APP, APP CTR, VOR, VOR CTR	Displays frequency of manually tuned navaid.
DME 24.6	DME distance (W)	APP, APP CTR, VOR, VOR CTR	Indicates DME distance to the reference navaid.
	VOR 1 or ADF 1 pointer head and tail (C)	All except PLN	Indicates bearing to (head) or from (tail) the tuned station. Not displayed if POS selected on the EFIS control panel.
	VOR 2 or ADF 2 pointer head and tail (C)		
	ILS localizer or VOR course deviation indication (M) and scale (W)	APP, APP CTR, VOR, VOR CTR	Displays LOC or VOR course deviation.
	Selected course pointer (W) and line (M)	APP, VOR	Displays selected course as set by the related MCP course selector.
	Selected course pointer (W) TO/FROM pointer (W)	APP CTR, VOR CTR	Displays selected course as set by the related MCP course selector. TO/FROM pointer is displayed when VOR navigation is being used.
	Glideslope pointer (M) and scale (W)	APP, APP CTR	Displays glideslope position and deviation.

Copyright © The Boeing Company. See title page for details.

SYMBOL	NAME	APPLICABLE MODE(S)	REMARKS
TO FROM	To/from indication (W)	VOR, VOR CTR	Displays VOR TO/FROM indication.
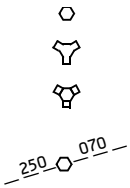	VOR (C, G), DME/TACAN (C, G), VORTAC (C, G) Manually tuned VOR radials	MAP, MAP CTR, PLN	When the EFIS control panel STA map switch is selected on, appropriate navaids are displayed. All navaids contained in the FMC data base and within the MAP area are displayed when the selected range is 5, 10, 20 or 40 nm. Only high altitude navaids are displayed when the selected range is 80, 160, 320 or 640 nm. Navaids not being used are displayed in cyan. Manually tuned VHF navaids are displayed in green, regardless of STA map switch selection. When a navaid is manually tuned, the selected course and reciprocal are displayed.

Copyright © The Boeing Company. See title page for details.

SYMBOL	NAME	APPLICABLE MODE(S)	REMARKS
	VOR radials (G)	MAP, MAP CTR	When the POS map switch is selected on and a valid VOR signal is received, the station radial is displayed.
	ADF bearings (C)	MAP, MAP CTR	When the POS map switch is selected on and a valid ADF signal is received, the relative bearing to the tuned ADF station is displayed.

MAP

[Option - Automatic position difference, weather radar range marks, single FMC]

SYMBOL	NAME	APPLICABLE MODE(S)	REMARKS
	Airplane symbol (W)	MAP, MAP CTR, APP, VOR	Current airplane position is at the apex of the triangle.
	Airplane symbol (W)	APP CTR, VOR CTR	Current airplane position is at the center of the symbol.

Copyright © The Boeing Company. See title page for details.

SYMBOL	NAME	APPLICABLE MODE(S)	REMARKS
	Position trend vector (W) (dashed line)	MAP, MAP CTR	Predicts position at the end of 30, 60, and 90 second intervals. Each segment represents 30 seconds. Based on bank angle and ground speed. Selected range determines the number of segments displayed. For range: • greater than 20 NM, 3 segments • = 20 NM, 2 segments • <= 10 NM, 1 segment.
	Airplane symbol (W)	PLN	Indicates actual position and track along the flight plan route in plan mode only. Inhibited north of 82N latitude and south of 82S latitude.
ABCDE	Active waypoint identifier (M)	MAP, MAP CTR, PLN	Indicates the active flight plan waypoint, the next waypoint on the route of flight.
124 NM	Active waypoint distance (W)	MAP, MAP CTR, PLN	Distance to the active waypoint.
0835.4z	Active waypoint ETA (W)	MAP, MAP CTR, PLN	Indicates FMS–calculated ETA at the active waypoint.
AMBOY	Waypoint: active (M), inactive (W)	MAP, MAP CTR, PLN	Active – represents the waypoint the airplane is currently navigating to. Inactive – represents the waypoints on the active route.

Copyright © The Boeing Company. See title page for details.

SYMBOL	NAME	APPLICABLE MODE(S)	REMARKS
MLF	Off route waypoint (C)	MAP, MAP CTR, PLN	When the EFIS control panel WPT map switch is selected on, waypoints not on the selected route are displayed, for ranges of 5, 10, 20, or 40 NM.
AMBOY KILMR PARBY	Flight plan route: active (M), modified (W), inactive (C), offset (M)	MAP, MAP CTR, PLN	The active route is displayed with a continuous line (M) between waypoints. Active route modifications are displayed with short dashes (W) between waypoints. Inactive routes are displayed with long dashes (C) between waypoints. An offset route, selected through the FMC, is displayed with a dot–dash line (M) parallel to the active route.
KILMR 12000 0835Z	Route data: active waypoint (M), inactive waypoint (W)	MAP, MAP CTR, PLN	When the EFIS control panel DATA map switch is selected on, entered or procedural altitude and ETAs for route waypoints are displayed.

Copyright © The Boeing Company. See title page for details.

SYMBOL	NAME	APPLICABLE MODE(S)	REMARKS
	Holding pattern: active route (M), modified route (W), inactive route (C)	MAP, MAP CTR, PLN	A holding pattern appears when in the flight plan. The holding pattern appears as a fixed size if the selected range is greater than 80 NM. A scaled representation of the holding pattern is displayed when the selected range is 80 NM or less and the airplane is within 3 minutes of the holding fix.
	Altitude range arc (G)	MAP, MAP CTR	Based on vertical speed and groundspeed, indicates the approximate map position where the MCP altitude is reached.

Copyright © The Boeing Company. See title page for details.

SYMBOL	NAME	APPLICABLE MODE(S)	REMARKS
○ T/D ○ T/C ○ S/C ○ E/D ○ T/D–XXXXX ○ DECEL ○	Altitude profile point and identifier (G)	MAP, MAP CTR, PLAN	Indicates the approximate map position of the FMC–calculated T/C (top–of–climb), T/D (top– of–descent), S/C (step climb), and E/D (end of descent) points. Indicates intermediate T/D points for level flight path segments during descent. Level flight path segment altitude is displayed. Indicates the beginning of a deceleration segment resulting from deceleration to a holding pattern, a waypoint speed restriction or flaps up maneuvering speed. Indicates airport speed restriction deceleration point (no identifier).
	VNAV path pointer (M) and deviation scale (W)	MAP, MAP CTR	Displays vertical deviation from selected VNAV PATH during descent only. Scale indicates +/- 400 feet deviation. Digital display is provided when the pointer indicates more than +/- 400 feet.

Copyright © The Boeing Company. See title page for details.

SYMBOL	NAME	APPLICABLE MODE(S)	REMARKS
	Procedure turn: active route (M), modified route (W), inactive route (C)	MAP, MAP CTR, PLN	A procedure turn appears when in the flight plan. The procedure turn appears as a fixed size if the selected range is greater than 80 NM. A scaled representation of the procedure turn is displayed when the selected range is 80 NM or less and the airplane is within 3 minutes of the procedure turn.
KABC 22L	Airport and runway (W)	MAP, MAP CTR, PLN	Displayed when selected as the origin or destination and selected range is 80, 160, 320, or 640 NM.
KTEB	Airport (C)	MAP, MAP CTR, PLN	Displayed if the EFIS control panel ARPT map switch is selected on. Origin and destination airports are always displayed, regardless of map switch selection.
22L	Airport and runway (W)	MAP, MAP CTR, PLN	Displayed when selected as the origin or destination and selected range is 5, 10, 20, or 40 NM. Dashed runway centerlines extend 14.2 NM.
R060 ABC	Selected reference point and bearing distance information (G)	MAP, MAP CTR, PLN	Displays the reference point selected on the CDU FIX page. Bearing and/or distance from the fix are displayed with dashes (G).

Copyright © The Boeing Company. See title page for details.

SYMBOL	NAME	APPLICABLE MODE(S)	REMARKS
FMC RADIO IRS-R IRS-L GPS	Position shift symbol: Active position (M), Other position (G), Position selected for update (W)	PLN	Displays the position of each navigation sensor. Symbols only appear if the POS SHIFT page is displayed on the CDU.
	Weather radar returns (R, A, G, M)	MAP, MAP CTR, APP, VOR	The most intense areas are displayed in red, lesser intensity in amber, and lowest intensity green. Turbulence is displayed in magenta.
STA WPT ARPT	Selected map options (C)	MAP, MAP CTR, PLN	Displays EFIS control panel selected map options.
FMC	MAP source annunciation (G)	MAP, MAP CTR, PLN	Displays source of data used by CDS for data presentation.
4.5 ▷L 4.3 △R	Position difference display (W)	MAP, MAP CTR	Numbers – indicate the position difference in NM between the present FMC position and the L IRS and R IRS present position. The selected IRS source is displayed on the first line. Arrows – indicate the relative bearing to the related IRS present position. L or R – indicates which IRS present position the displayed position difference corresponds to. Displayed when the position difference of the L IRS and/or R IRS exceeds the position difference limits.

Copyright © The Boeing Company. See title page for details.

SYMBOL	NAME	APPLICABLE MODE(S)	REMARKS
	Drift angle pointer (W)	APP CTR, VOR CTR	Indicates airplane's present track. Replaces track line in the center APP and VOR modes.
N↑	North up arrow (G)	PLN	Indicates map background is oriented and referenced to true north.

Copyright © The Boeing Company. See title page for details.

Look-Ahead Terrain

SYMBOL	NAME	ND MODE	REMARKS
	Terrain display (R, A, G, M)	MAP, MAP CTR, APP, VOR	Displays terrain data from the GPWS terrain data base. Terrain 2000 feet below to 500 feet (250 feet with gear down) below the airplane's current altitude (G), terrain 500 feet (250 feet with gear down) below to 2000 feet above the airplane's current altitude (A), terrain more than 2000 feet above airplane's current altitude (R), no terrain data available (M). Color and density vary based on terrain height vs. airplane altitude.
TERR	Terrain mode annunciation (C)	MAP, MAP CTR, APP, VOR	Terrain display enabled (manual or automatic display).
TERR TEST	Terrain test mode annunciation (C)	All	GPWS operating in self-test mode.
TERRAIN	Terrain annunciation (R, A)	All	Look-ahead terrain caution alert active (A), look-ahead terrain warning alert active (R).

Copyright © The Boeing Company. See title page for details.

SYMBOL	NAME	ND MODE	REMARKS
TERR FAIL	Terrain status annunciations (A)	All	Look-ahead terrain alerting and display have failed.
TERR POS		All	Look-ahead terrain alerting and display unavailable due to position uncertainty.
TERR INHIBIT		All	GPWS terrain inhibit switch in TERR INHIBIT position.
TERR RANGE DISAGREE	Terrain range status annunciations (A)	MAP, MAP CTR, APP, VOR	Terrain output range disagrees with selected EFIS control panel range.
MAP/TERR RANGE DISAGREE		MAP, MAP CTR	Terrain output range and map display output range disagree with selected EFIS control panel range.

Copyright © The Boeing Company. See title page for details.

Predictive Windshear

SYMBOL	NAME	ND MODE	REMARKS
	Predictive windshear symbol (R, B, A)	MAP, MAP CTR, APP, VOR	Displays windshear location and approximate geometric size (width and depth). Amber radials extend from predictive windshear symbol to help identify location of windshear event.
WINDSHEAR	Windshear annunciation (R, A)	All	Predictive windshear caution active (A). Predictive windshear warning active (R).
PWS FAIL	Predictive windshear status annunciation (A)	All	Predictive windshear alerting and display have failed.

Copyright © The Boeing Company. See title page for details.

TCAS

[Option - 3NM TCAS range ring]

SYMBOL	NAME	APPLICABLE MODE(S)	REMARKS
■ ↑ −03	TCAS resolution advisory (RA), relative altitude (R)	MAP, MAP CTR, APP, VOR	These symbols are displayed only when the EFIS control panel traffic (TFC) switch is selected on. Refer to Chapter 15, Warning Systems. The arrow indicates traffic climbing or descending at a rate greater than or equal to 500 fpm. At rates less than 500 fpm, the arrow is not displayed. For relative altitude symbols, the number and related signs indicate altitude of traffic in hundreds of feet relative to the airplane. For absolute altitude symbols, the number indicates altitude of traffic in thousands and hundreds of feet. For both relative and absolute altitude, the number is below the traffic symbol when the traffic is below, and above the traffic symbol when the traffic is above the airplane. Absence of the number implies altitude unknown.
+02 ● ↓	TCAS traffic advisory (TA), relative altitude (A)		
♦ ↓ −05	TCAS proximate traffic, relative altitude (W)		
+09 ◊ ↑	TCAS other traffic, relative altitude (W)		
● ↑ 12 8	TCAS TA, absolute altitude		

Copyright © The Boeing Company. See title page for details.

SYMBOL	NAME	APPLICABLE MODE(S)	REMARKS
RA 5.3 +03 ↑ TA 8.9 −12 ↑	TCAS no bearing message (RA–R, TA–A)	MAP, MAP CTR, APP, VOR	Message provides traffic type, range in NM, altitude and vertical direction.
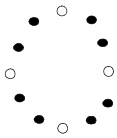	Range Ring (W)	MAP, MAP CTR, APP, VOR	Displayed when TFC selected on EFIS Control Panel. Shows 3 NM range ring oriented to aircraft heading. Displayed at ranges of 80 NM or less.
TRAFFIC	TCAS traffic alert message (RA–R, TA–A)	All	Displayed whenever a TCAS RA or TA is active. EFIS control panel TFC switch does not have to be selected on.
OFFSCALE	TCAS off scale message (RA–R, TA–A)	MAP, MAP CTR, APP, VOR	Displayed whenever RA or TA traffic is outside the traffic area covered by the selected range. Displayed only if the EFIS control panel TFC switch is selected on.
TFC	TCAS mode (C)	MAP, MAP CTR, APP, VOR	Indicates the TCAS display is active; the EFIS control panel TFC switch is selected on.
TA ONLY	TCAS mode (C)	All	Indicates TCAS computer is not computing RAs. Displayed whether the EFIS control panel TFC switch is selected on or off.

Copyright © The Boeing Company. See title page for details.

SYMBOL	NAME	APPLICABLE MODE(S)	REMARKS
TCAS TEST	TCAS mode (C)	All	Indicates TCAS is operating in the test mode. Displayed whether EFIS control panel TFC switch is selected on or off.
TCAS OFF	TCAS mode (A)	All	Displayed when the TCAS/ATC mode switch is not in TA ONLY or TA/RA, whether EFIS control panel TFC switch is selected on or off. Not displayed if TCAS is failed or in test.
TCAS FAIL	TCAS mode (A)	All	Indicates TCAS failure, whether EFIS control panel TFC switch is selected on or off. Once displayed, can be cycled on/off with the TFC switch.

Copyright © The Boeing Company. See title page for details.

Introduction

The NDs provide a mode–selectable color flight progress display. The modes are:

- MAP
- VOR
- APP (approach)
- PLN (plan).

The MAP, VOR, and APP modes can be switched between an expanded mode with a partial compass rose and a centered mode with a full compass rose.

Map Mode

The MAP mode is recommended for most phases of flight.

[Option - Track-up display]
Presented track up, this mode shows airplane position relative to the route of flight against a moving map background.

Displayed information can include:

- current track
- selected and current heading
- position trend vector
- range to selected altitude
- map range scale
- ground speed
- true airspeed
- wind direction and speed
- next waypoint distance
- waypoint estimated time of arrival
- selected navigation data points.

Navigation Data Points

Additional navigation facility (STA), waypoint (WPT), airport (ARPT), route progress (DATA) and position (POS) data are available for display on the ND in both the expanded and center map modes.

VOR and Approach Modes

The VOR and APP modes are presented heading up. The VOR and APP modes display track, heading, and wind speed and direction with VOR navigation or ILS approach information.

Plan Mode

The PLN mode is presented true north up. The active route may be viewed using the STEP prompt on the CDU LEGS pages.

Copyright © The Boeing Company. See title page for details.

DO NOT USE FOR FLIGHT

ND Information

Heading

Heading is supplied by the FMC or air data inertial reference system (ADIRS). The ND compass rose can be referenced to magnetic north or true north.

Track

Track is supplied by the FMC during normal operation.

Traffic

Traffic information from the TCAS can be displayed on the ND. TCAS is described in Chapter 15, Warning Systems.

Weather Radar

Weather radar information can be displayed on the ND. The weather radar system is described in Chapter 11, Flight Management, Navigation.

Failure Flags and Messages

Failure flags are displayed for system failures or invalid information. Indications are removed or replaced by dashes when source system information is not available.

The message EXCESS DATA is displayed if the amount of information sent to the ND exceeds the display capability. When this occurs, the primary display system removes information from the outer edge of the display. The message can be removed by:

- reducing the amount of map information
- reducing range, or
- deselecting one or more of the EFIS control panel map switches (STA, WPT, ARPT, DATA, POS).

ND Symbology

The following symbols can be displayed on each ND, depending on EFIS control panel switch selections. Colors indicate the following:

- W (white) – present status, range scales
- G (green) – dynamic conditions
- M (magenta) – command information, pointers, symbols, fly–to condition
- C (cyan) – nonactive or background information
- A (amber) – cautions, faults, flags
- R (red) – warnings
- B (black) – blank area, off condition.

Copyright © The Boeing Company. See title page for details.

Heading, Track, and Speed

[Option - Track-up display]

SYMBOL	NAME	ND MODE	REMARKS
TRK 062 MAG	Track orientation (G), current track (W), and track reference (G)	Shows track in MAP, MAP CTR.	Displays TRK as the orientation, the current track, and MAG or TRU as the reference, and points to the heading on the compass rose.
HDG 263 MAG	Heading orientation (G), current heading (W), heading reference (G), and heading pointer (W)	Shows HDG (heading) in VOR, VOR CTR, APP, APP CTR	Displays HDG as the display orientation, current heading, MAG or TRU as the heading reference, and points to the heading on the compass rose.
	Selected heading bug (M)	All except PLAN	Displays the MCP–selected heading. A dashed reference line (M) extends from the marker to the airplane symbol (VOR CTR and APP CTR do not display dashed line). In the MAP mode with LNAV or VORLOC engaged, the dashed line is removed 10 seconds after the selected heading bug is moved.
40	Track line and range scale (W)	MAP, MAP CTR, VOR, VOR CTR, APP, APP CTR	Indicates current track. Number indicates range (VOR CTR and APP CTR do not display range).
12 15	Expanded compass (W)	MAP, APP, VOR	Displays 90 degrees of compass rose.

Copyright © The Boeing Company. See title page for details.

SYMBOL	NAME	ND MODE	REMARKS
GS310	Groundspeed (W)	All	Current ground speed.
TAS312	True airspeed (W)	All	Current true airspeed displayed above 100 knots.
350°/15 ↙	Wind direction/ speed and wind arrow (W)	All	Indicates wind speed and direction, with respect to display orientation and heading/track reference. Displayed if wind magnitude is greater than 6 knots and blanked if wind magnitude becomes less than 4 knots. Blank until TAS is greater than 101 knots. PLAN mode displays speed/direction only.

Copyright © The Boeing Company. See title page for details.

Radio Navigation

[Option – VOR course lines displayed, dual ADF]

SYMBOL	NAME	ND MODE	REMARKS
VOR 1, 2 ILS 1, 2	Reference receiver (G)	VOR, VOR CTR, APP, APP CTR	Indicates the selected receiver as the display reference.
116.80 OR SEA	ILS/VOR (W) Reference receiver frequency or identifier display	VOR, VOR CTR, APP, APP CTR	Located upper right corner. Frequency displayed before the identifier is decoded. The decoded identifier replaces the frequency. Medium size characters for VOR, small size characters for DME only.
DME 24.6	Reference ILS or VOR DME (W)	VOR, VOR CTR, APP, APP CTR	Located upper right corner. Indicates DME distance to the reference navaid.
CRS 135	Reference ILS or VOR course (W)	VOR, VOR CTR, APP, APP CTR	Located upper right corner. Indicates the VOR course or ILS localizer course.
	VOR 1 (G) or ADF 1 (C) pointer head and tail	All except PLAN	Indicates bearing to (head) or from (tail) the tuned station, if selected on the respective EFIS control panel.
	VOR 2 (G) or ADF 2 (C) pointer head and tail		
	ILS localizer or VOR course deviation indication (M) and scale (W)	VOR, VOR CTR, APP, APP CTR	Displays LOC or VOR course deviation. Deviation indicator points in direction of VOR or ILS selected course. For ILS deviation, indicator fills (M) when less than 2 1/2 dots from center.
	Selected course pointer (W) and line (M)	VOR, APP,	Displays selected course as set by the related MCP course selector.

Copyright © The Boeing Company. See title page for details.

 DO NOT USE FOR FLIGHT

SYMBOL	NAME	ND MODE	REMARKS
	Selected course pointer (W) TO/FROM pointer (W)	APP CTR, VOR CTR	Displays selected course as set by the related MCP course selector. TO/FROM pointer is displayed when VOR navigation is being used.
	Glide slope pointer (M) and scale (W)	APP, APP CTR	Displays glideslope position and deviation.
TO FROM	To/from indication (W)	VOR, VOR CTR	Displays VOR to/from indication.
	VOR (C, G), DME/TACAN (C, G), VORTAC (C, G)	MAP, MAP CTR, PLN	When the EFIS control panel STA map switch is selected on, appropriate navaids are displayed. All navaids contained in the FMC data base and within the MAP area are displayed when the selected range is 5, 10, 20 or 40 nm. Only high altitude navaids are displayed when the selected range is 80, 160, 320 or 640 nm. Nav aids not being used are displayed in cyan. Manually tuned VHF navaids are displayed in green, regardless of STA map switch selection.
	VOR/DME raw data radial and distance (G)	MAP, MAP CTR	When the POS map switch is selected on, the station radial extends to the airplane.

Copyright © The Boeing Company. See title page for details.

SYMBOL	NAME	ND MODE	REMARKS
250 070	Manually tuned VOR radials	MAP, MAP CTR, PLN	When a navaid is manually tuned, the selected course and reciprocal are displayed.
VOR 1, 2 ADF 1, 2	VOR (G) or ADF (C) selection	MAP, MAP CTR, VOR, VOR CTR, APP, APP CTR	Located lower left or right corner. Represents positions of the EFIS control panel VOR/ADF switches.
116.80 OR SEA OR 520 OR BF	VOR frequency or identifier (G), ADF frequency or identifier (C)	MAP, MAP CTR, VOR, VOR CTR, APP, APP CTR	Located lower left or right corner. Frequency is displayed before identifier is decoded. Decoded identifier replaces the frequency. For VORs, small size characters indicate only DME information is being received.
DME 24.6	DME distance (G)	MAP, MAP CTR, VOR, VOR CTR, APP, APP CTR	Located lower left or right corner. Indicates DME distance to navaid.

Copyright © The Boeing Company. See title page for details.

Map

[Option - Weather radar range arcs, dual FMC]

SYMBOL	NAME	ND MODE	REMARKS
   1.2 R	Airplane symbol (W)	MAP, MAP CTR, VOR, APP MAP, MAP CTR.	Current airplane position is at the apex of the triangle. Current airplane position with lateral path deviation distance.
	Airplane symbol (W)	VOR CTR, APP CTR	Current airplane position is at the center of the symbol.
	Position trend vector (W) (dashed line)	MAP, MAP CTR	Predicts position at the end of 30, 60, and 90 second intervals. Each segment represents 30 seconds. Based on bank angle and ground speed. Selected range determines the number of segments displayed. For range: • greater than 20 NM, 3 segments • = 20 NM, 2 segments • < = 10 NM, 1 segment.
	Airplane symbol (W)	PLAN	Indicates actual position and track along the flight plan route in plan mode only. Inhibited north of 82N latitude and south of 82S latitude.
ABCDE	Active waypoint identifier (M)	MAP, MAP CTR, PLAN	Indicates the active flight plan waypoint, the next waypoint on the route of flight.
124 NM	Active waypoint distance (W)	MAP, MAP CTR, PLAN	Distance to the active waypoint.

Copyright © The Boeing Company. See title page for details.

SYMBOL	NAME	ND MODE	REMARKS
0835.4z	Active waypoint ETA (W)	MAP, MAP CTR, PLAN	Indicates FMS–calculated ETA at the active waypoint.
AMBOY	Waypoint: active (M), modified (W), inactive (C)	MAP, MAP CTR, PLAN	Active – represents the waypoint the airplane is currently navigating to. Modified – represents modified waypoints on the active route. Inactive – represents the waypoints on the active route.
MLF	Off route waypoint (C)	MAP, MAP CTR, PLAN	When the EFIS control panel WPT map switch is selected on, waypoints not on the selected route are displayed, in ND ranges of 5, 10, 20, or 40.
AMBOY KILMR PARBY	Flight plan route: active (M), modified (W), inactive (C), offset (M)	MAP, MAP CTR, PLAN	The active route is displayed with a continuous line (M) between waypoints. Active route modifications are displayed with short dashes (W) between waypoints. Inactive routes are displayed with long dashes between waypoints. An offset route, selected through the FMC, is displayed with a dot–dash line (M) parallel to the active route.
KILMR 12000 0835Z	Route data: active waypoint (M), inactive waypoint (W)	MAP, MAP CTR, PLAN	When the EFIS control panel DATA switch is selected on, entered or procedural altitude and ETAs for route waypoints are displayed.

Copyright © The Boeing Company. See title page for details.

SYMBOL	NAME	ND MODE	REMARKS
	Holding pattern: active route (M), modified route (W), inactive route (C)	MAP, MAP CTR, PLAN	A holding pattern appears when in the flight plan. The holding pattern appears as a fixed size if the selected range is greater than 80 NM. A scaled representation of the holding pattern is displayed when the selected range is 80 NM or less and the airplane is within 3 minutes of the holding fix.
	Altitude range arc (G)	MAP, MAP CTR,	Based on vertical speed and groundspeed, indicates the approximate map position where the MCP altitude will be reached.
T/D T/C S/C E/D T/D–XXXXX DECEL	Altitude profile point and identifier (G)	MAP, MAP CTR, PLAN	Indicates the approximate map position of the FMC–calculated T/C (top–of–climb), T/D (top–of–descent), S/C (step climb), and E/D (end of descent) points. Indicates intermediate T/D points for level flight path segments during descent. Level flight path segment altitude is displayed. Indicates the beginning of a deceleration segment resulting from deceleration to a holding pattern, a waypoint speed restriction or flaps up maneuvering speed. Indicates airport speed restriction deceleration point (no identifier).

Copyright © The Boeing Company. See title page for details.

SYMBOL	NAME	ND MODE	REMARKS
	VNAV path pointer (M) and deviation scale (W) VNAV path deviation band (M)	MAP, MAP CTR	Displays vertical deviation from selected VNAV PATH during descent only. Scale indicates ± 400 feet deviation. Digital display is provided when the pointer indicates more than ± 400 feet. Path deviation band is symmetric about the pointer and represents vertical RNP.
	Procedure turn: active route (M), modified route (W), inactive route (C)	MAP, MAP CTR, PLAN	A procedure turn appears when in the flight plan. The procedure turn appears as a fixed size if the selected range is greater than 80 NM. A scaled representation of the procedure turn is displayed when the selected range is 80 NM or less and the airplane is within 3 minutes of the procedure turn.
KABC 22L	Airport and runway (W)	MAP, MAP CTR, PLAN	Displayed when selected as the origin or destination and ND range is 80, 160, 320, or 640 NM.
KTEB	Airport (C)	MAP, MAP CTR, PLAN	Displayed if the EFIS control panel ARPT map switch is selected on. Origin and destination airports are always displayed, regardless of map switch selection.

Copyright © The Boeing Company. See title page for details.

SYMBOL	NAME	ND MODE	REMARKS
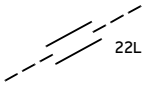	Airport and runway (W)	MAP, MAP CTR, PLAN	Displayed when selected as the origin or destination and ND range is 5, 10, 20, or 40 NM. Dashed runway centerlines extend 14.2 NM.
	Selected reference point and bearing distance information (G)	MAP, MAP CTR, PLAN	Displays the reference point selected on the CDU FIX page. Bearing and/or distance from the fix are displayed with dashes (G).
FMC L FMC R FMC	MAP source annunciation (G)	MAP, MAP CTR, PLN	Displays source of FMC data used by CDS for data presentation. If single FMC installed, displays FMC.
	GPS position (W)	MAP, MAP CTR	When the EFIS POS map switch is selected on, indicates GPS position relative to FMC position.
	ADIRU position (W)	MAP, MAP CTR	When the EFIS control panel POS map switch is selected on, the star indicates ADIRU position relative to FMC position.
	Weather radar returns (R, A, G, M)	MAP, MAP CTR, VOR, APP	The most intense areas are displayed in red, lesser intensity in amber, and lowest intensity green. Turbulence is displayed in magenta.
STA WPT ARPT	Selected map options (C)	MAP, MAP CTR, PLAN	Displays EFIS control panel selected map options.

Copyright © The Boeing Company. See title page for details.

SYMBOL	NAME	ND MODE	REMARKS
N↑	North up arrow (G)	PLAN	Indicates map background is oriented and referenced to true north.
	Range arcs (W)	MAP, APP, VOR	Displayed in MAP, APP and VOR modes when the EFIS WXR map switch is selected or TCAS TFC switch is selected.
WXR +5 CAL or VAR	Weather radar annunciations Mode (C), Tilt (C) Gain (C)	MAP, MAP CTR, VOR, APP	Annunciations vary with option selected

Copyright © The Boeing Company. See title page for details.

DO NOT USE FOR FLIGHT

Look-Ahead Terrain

SYMBOL	NAME	ND MODE	REMARKS
	Terrain display (R, A, G, M)	MAP, MAP CTR, APP, VOR	Displays terrain data from the GPWS terrain data base. Terrain 2000 feet below to 500 feet (250 feet with gear down) below the airplane's current altitude (G), terrain 500 feet (250 feet with gear down) below to 2000 feet above the airplane's current altitude (A), terrain more than 2000 feet above airplane's current altitude (R), no terrain data available (M). Color and density vary based on terrain height vs. airplane altitude.
TERR	Terrain mode annunciation (C)	MAP, MAP CTR, APP, VOR	Terrain display enabled (manual or automatic display).
TERR TEST	Terrain test mode annunciation (C)	All	GPWS operating in self-test mode.
TERRAIN	Terrain annunciation (R, A)	All	Look-ahead terrain caution alert active (A), look-ahead terrain warning alert active (R).

Copyright © The Boeing Company. See title page for details.

SYMBOL	NAME	ND MODE	REMARKS
TERR FAIL	Terrain status annunciations (A)	All	Look-ahead terrain alerting and display have failed.
TERR POS		All	Look-ahead terrain alerting and display unavailable due to position uncertainty.
TERR INHIBIT		All	GPWS terrain inhibit switch in TERR INHIBIT position.
TERR RANGE DISAGREE	Terrain range status annunciations (A)	MAP, MAP CTR, APP, VOR	Terrain output range disagrees with selected EFIS control panel range.
MAP/TERR RANGE DISAGREE		MAP, MAP CTR	Terrain output range and map display output range disagree with selected EFIS control panel range.

Copyright © The Boeing Company. See title page for details.

DO NOT USE FOR FLIGHT

Predictive Windshear

SYMBOL	NAME	ND MODE	REMARKS
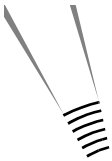	Predictive windshear symbol (R, B, A)	MAP, MAP CTR, APP, VOR	Displays windshear location and approximate geometric size (width and depth). Amber radials extend from predictive windshear symbol to help identify location of windshear event.
WINDSHEAR	Windshear annunciation (R, A)	All	Predictive windshear caution active (A). Predictive windshear warning active (R).
PWS FAIL	Predictive windshear status annunciation (A)	All	Predictive windshear alerting and display have failed.

Copyright © The Boeing Company. See title page for details.

TCAS

[Option - 3NM TCAS range ring]

SYMBOL	NAME	ND MODE	REMARKS
■ ↑ −03	TCAS resolution advisory (RA), relative altitude (R)	MAP, MAP CTR, APP, VOR	These symbols are displayed only when the EFIS control panel traffic (TFC) switch is selected on. Refer to Chapter 15, Warning Systems. The arrow indicates traffic climbing or descending at a rate greater than or equal to 500 fpm. At rates less than 500 fpm, the arrow is not displayed. The number and associated signs indicate altitude of traffic in hundreds of feet relative to the airplane. The number is below the traffic symbol when the traffic is below, and above the traffic symbol when the traffic is above the airplane. Absence of the number implies altitude unknown.
+02 ● ↓	TCAS traffic advisory (TA), relative altitude (A)		
♦ ↓ −05	TCAS proximate traffic, relative altitude (W)		
+09 ◊ ↑	TCAS other traffic, relative altitude (W)		
RA 5.3 +03 ↑ TA 8.9 −12 ↑	TCAS no bearing message (RA–R, TA–A)	MAP, MAP CTR, APP, VOR	Message provides traffic type, range in NM, altitude and vertical direction. TFC must be selected on.
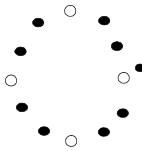	Range Ring (W)	MAP, MAP CTR, APP, VOR	Displayed when TFC selected on EFIS Control Panel. Shows 3 NM range ring oriented to aircraft heading. Displayed at ranges of 80 NM or less.
TRAFFIC	TCAS traffic alert message (RA–R, TA–A)	All	Displayed whenever a TCAS RA or TA is active. EFIS control panel TFC switch does not have to be selected on.

Copyright © The Boeing Company. See title page for details.

SYMBOL	NAME	ND MODE	REMARKS
OFFSCALE	TCAS off scale message (RA–R, TA–A)	MAP, MAP CTR, APP, VOR	Displayed whenever RA or TA traffic is outside the traffic area covered by the ND range. Displayed only if the EFIS control panel TFC switch is selected on.
TFC	TCAS mode (C)	MAP, MAP CTR, APP, VOR	Indicates the ND TCAS display is active; the EFIS control panel TFC switch is selected on.
TA ONLY	TCAS mode (C)	All	Indicates TCAS computer is not computing RAs. Displayed whether the EFIS control panel TFC switch is selected on or off.
TCAS TEST	TCAS mode (C)	All	Indicates TCAS is operating in the test mode. Displayed whether EFIS control panel TFC switch is selected on or off.
TCAS OFF	TCAS mode (A)	All	Displayed when the TCAS/ATC mode switch is not in TA ONLY or TA/RA, whether EFIS control panel TFC switch is selected on or off. Not displayed if TCAS is failed.
TCAS FAIL	TCAS mode (A)	All	Indicates TCAS failure, whether EFIS control panel TFC switch is selected on or off. Once displayed, can be cycled on/off with the TFC switch.

Copyright © The Boeing Company. See title page for details.

DO NOT USE FOR FLIGHT

Introduction

HUD symbology consists of green symbols projected on the combiner from the OHU. The PRI mode display symbols are similar to those on the CDS, and can be used for all phases of flight. The approach mode displays (AIII, IMC, VMC) are optimized to enhance aircraft control and situational awareness during final approach, flare, and touchdown.

In addition to flight symbology, TCAS resolution advisories and HUD system failure flags and data source annunciations are displayed when active.

Head-Up Guidance Display Symbology

[Option - Model 2350]

The following symbols can be displayed on the combiner, depending on HUD and EFIS control panel switch selections.

SYMBOL	NAME	MODE	REMARKS
	Airplane reference	All	Top center point of the symbol represents airplane projected centerline. The symbol is positioned at a fixed position 7 ° above the display's vertical center. Symbol is fixed at display center when the unusual attitude display is active.
	Horizon Line	All	Indicates the horizon relative to the airplane reference symbol. Position based on current airplane pitch and roll attitude.
5 5 -5 -5	Pitch Scale	PRI in flight, AIII approach, IMC, VMC	Displays airplane pitch in five degree increments between -20 ° and +25 °.

Copyright © The Boeing Company. See title page for details.

SYMBOL	NAME	MODE	REMARKS
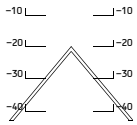	Compressed pitch scale	PRI in flight, AIII approach, IMC, VMC	Displays airplane pitch in ten degree increments between +/-30 ° and +/-90 °. A chevron appears on the pitch scale at -20 ° and +30 °.
	Bank Scale and Pointer	All	Displays the corresponding roll attitude in ten degree increments between 0 ° and +/-30 °. Tic marks at +/-45 ° and +/-60 ° are added when the airplane exceeds +/-35 ° and +/-50 ° respectively.
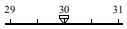	Horizon heading scale	All	Magnetic heading is displayed in five degree increments (and labeled every 10 °) on the horizon line. A downward pointing triangle indicates current airplane magnetic heading.
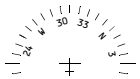	HSI heading scale	PRI in flight	Displays airplane magnetic heading in a 210 ° compass rose format.
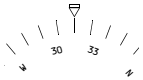	Heading pointer	PRI in flight	Indicates current heading.
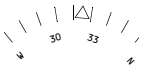	Drift angle pointer	PRI in flight	Indicates current drift angle or track.

Copyright © The Boeing Company. See title page for details.

SYMBOL	NAME	MODE	REMARKS
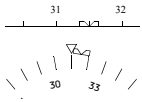	Selected heading bug	All	Displays selected heading on the horizon line and on the HSI (when in view). Not displayed if the selected heading is outside of the currently displayed heading scale.
HDG 315	Digital selected heading	All	Displayed full time in PRI mode and for five seconds after selection in the IMC, VMC or AIII modes.
H 310	Digital heading	All	Displays current magnetic heading directly below the roll scale pointer.
	Ground roll reference	PRI ground	Provides a reference for ground roll guidance during low visibility takeoff operations.
	Flight path vector	PRI in flight, AIII approach, IMC, VMC	Displays the actual flight path vector of the aircraft. Has display priority over all other symbols except the guidance cue and the FLARE command.
	Flight path acceleration	All	Positioned left of the flight path vector; indicates sum of all forces affecting the airplane including thrust, drag, and wind. Positioned above flight path vector; airplane is accelerating. Positioned below flight path vector; airplane is decelerating.

Copyright © The Boeing Company. See title page for details.

SYMBOL	NAME	MODE	REMARKS
	Pitch limit indication (also called angle of attack limit)	PRI in flight, AIII approach, IMC, VMC	Displayed whenever the airplane's angle of attack is within 5 ° of stick shaker, any time stick shaker is active, or whenever WINDSHEAR guidance cue is displayed.
	Slip/skid indicator	All	The bottom portion of the bank scale pointer moves laterally with respect to the top triangle portion of the pointer.
	Additional slip/skid indicators	PRI in flight, AIII approach, IMC, VMC	Positioned below the airplane reference and flight path symbols. Displayed during takeoff until 1500 feel AGL. Displayed (bold) on approach, if TO/GA is engaged below 1000 feet AGL, and remain until 1500 feet AGL, or when TO/GA mode is exited.
	Speed error tape	PRI in flight, AIII approach, IMC, VMC	Displays the difference between indicated airspeed and the reference speed selected on the mode control panel. Tape length equal to the diameter of the flight path circle represents approximately 5 knots of error. Maximum tape length is limited to 15 knots of error.

Copyright © The Boeing Company. See title page for details.

SYMBOL	NAME	MODE	REMARKS
	Bank warning	PRI in flight, AIII approach, IMC, VMC	Displayed if radio altitude is less than 100 feet and airplane roll angle exceeds 5 °. Symbol remains until roll angle is less than 3 ° or radio altitude greater than 100 feet.
	Flight director guidance cue	PRI in flight, IMC	Functions similar to the flight director, but is designed for control of flight path. Automatically displayed when pitch is less than 2° or radio altimeter indicates 50 feet. The objective is to capture the guidance cue inside the flight path vector circle.
	HUD guidance cue	PRI ground, AIII approach	Similar to flight director guidance cue, but driven by HUD computer. During low visibility takeoff, the cue provides localizer tracking. During AIII approach, the cue provides approach and flare commands. The objective is to capture the guidance cue inside the flight path vector or ground roll reference circle.

Copyright © The Boeing Company. See title page for details.

SYMBOL	NAME	MODE	REMARKS
--------	TO/GA pitch target line	PRI in flight, PRI ground	Displayed when greater than 65 knots, AFDS TO/GA mode active and a valid pitch command input of greater than 10 ° is received. Symbol remains until TO/GA mode is exited. The objective is to place the airplane reference symbol on the target line.
+	AIII flare command	AIII approach	Initially displayed 2-3 ° directly below the guidance cue at 105 feet above runway elevation. The symbol flashes for one second and rises toward the guidance cue at a rate proportional to the expected flare pitch rate. At an altitude between 45 and 55 feet, the flare command and guidance cue meet and continue rising to command the flare maneuver until touchdown.
+ +	Flare cues	PRI in flight, IMC, VMC	Displayed on each side of the flight path symbol, indicating the flare maneuver must be accomplished. The cues flash continuously as the airplane descends through 55 feet radio altitude, until 10 feet radio altitude is reached.

Copyright © The Boeing Company. See title page for details.

SYMBOL	NAME	MODE	REMARKS
↓ 28	Wind direction/speed and wind arrow	PRI in flight, AIII approach, IMC,VMC	Indicates wind speed and direction, with respect to airplane magnetic heading. Displayed if wind magnitude is greater than 6 knots and blanked if wind magnitude becomes less than 4 knots.
WINDSHEAR	Windshear warning	PRI in flight, AIII approach, IMC,VMC	Displayed above the airplane reference symbol during a GPWS or PWS windshear warning.
PULL UP	Ground proximity warning	PRI in flight, AIII approach, IMC,VMC	Displayed whenever the GPWS is activated.
●	Windshear guidance cue	PRI in flight	During a windshear warning, and in TO/GA mode, the PRI mode is automatically selected and the guidance cue becomes a solid circle to provide guidance to exit windshear conditions.

Copyright © The Boeing Company. See title page for details.

SYMBOL	NAME	MODE	REMARKS
250	Radio altitude	PRI in flight, AIII approach, IMC,VMC	Displayed below the flight path symbol, or relative to the airplane reference symbol if the flight path symbol is not displayed. The value is removed from the display at 1500 feet when ascending and again displayed at 1400 feet when descending. This value is displayed in ten foot increments between 50 and 1500 feet, five foot increments between 10 and 50 feet and one foot increments between -20 and 10 feet.
DH	Decision height	PRI in flight, AIII approach, IMC	Displayed left of radio altitude when selected decision height is reached. When decision height is reached, the message flashes for 3 seconds and then remains steady.
OM or MM or IM	Marker beacon	PRI in flight, AIII approach, IMC	Displayed below the airplane reference symbol for marker beacon passage.
210	Digital airspeed	AIII approach, AIII rollout, IMC, VMC	Displays airspeed next to the flight path symbol if it is displayed, and next to the airplane reference symbol if flight path is not displayed.
AS 210	Digital selected airspeed	All	Displays speed selected on the MCP.

Copyright © The Boeing Company. See title page for details.

SYMBOL	NAME	MODE	REMARKS
GS 120	Digital ground speed	All	Displays digital ground speed.
.540	Digital mach	PRI in flight	Displays mach speed below airspeed scale when mach speed is above .400. Removed when below .380.
.39	Selected mach	All	Displays selected mach speed above airspeed scale (PFD/ND format only).
450 B	Digital barometric altitude	AIII approach, AIII rollout, IMC, VMC	Displays barometric altitude relative to the flight path symbol if it is displayed, and relative to the airplane reference symbol if flight path is not displayed.
600 VS	Digital vertical speed	PRI in flight, AIII approach, IMC, VMC	In PRI mode, displayed in the lower right corner of the display. In all other modes, displayed to the right of the flight path symbol. Value displayed in 50 feet/minute increments.
DME28.4	DME distance	PRI in flight, AIII approach, IMC, VMC	Indicates DME distance to the reference navaid.
58.4NM	Distance to go	PRI in flight, IMC	Distance to next waypoint.
CRS 316	Selected course (digital)	All	Displayed full time in PRI mode and for five seconds after selection in the IMC, VMC or AIII modes.

Copyright © The Boeing Company. See title page for details.

SYMBOL	NAME	MODE	REMARKS
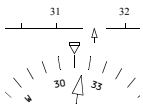	Selected course pointer	All	Displays MCP selected course below the horizon line and on the HSI (PRI mode only). The horizon line pointer is surrounded by a 3 ° gap in the horizon line.
VOR 1,2 ILS 1,2	System source annunciation	PRI in flight, PRI ground, AIII approach, AIII rollout IMC	Indicates the selected receiver as the display source.
VOR/ILS			Indicates source cannot be determined.
FMC L, R	FMC source annunciation	All	Indicates the selected FMC as the system source.
-3.00 -- -- -3.00	Glideslope reference line	AIII approach, IMC, VMC	Displays the glideslope value entered on the HUD control panel. Positioning the flight path symbol over the glideslope reference line results in a descent angle equal to the value entered.
	ILS localizer or VOR deviation indication and scale	PRI in flight	Displays LOC or VOR course deviation on the HSI. With excessive localizer deviation during an ILS approach, the symbol will flash until the excessive deviation is no longer present.

Copyright © The Boeing Company. See title page for details.

SYMBOL	NAME	MODE	REMARKS
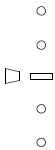	Glideslope pointer and deviation scale	PRI in flight	Displays glideslope position and deviation during ILS approach. With excessive glideslope deviation, the pointer will flash until the excessive deviation is no longer present.
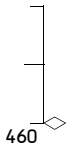	Vertical deviation pointer and scale	PRI in flight, IMC	Full scale represents 400 feet of vertical deviation. When the deviation is off scale, the pointer is parked at the top or bottom of the tape, and the digital value is displayed at the appropriate end of the scale.
	Lateral deviation line	AIII approach, IMC	Displayed as vertical lines referenced to the selected course. In IMC mode, the line will flash during excessive localizer deviation.
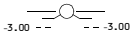	Glideslope deviation line	AIII approach, IMC	Displayed as horizontal lines referenced to the glideslope reference line. In IMC mode, the line will flash during excessive glideslope deviation. The line is removed below 70 feet radio altitude.
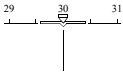	Ground localizer line	PRI ground, AIII rollout, IMC	Displays localizer deviation as a vertical line below the airplane reference symbol and is referenced to the selected course.

Copyright © The Boeing Company. See title page for details.

SYMBOL	NAME	MODE	REMARKS
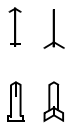	VOR1/ADF 1 pointer head and tail VOR2/ADF 2 pointer head and tail	PRI in flight	Indicates bearing to (head) or from (tail) the tuned station.
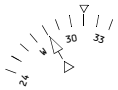	To/from pointer	PRI in flight, PRI ground	A triangle pointing in the same direction as the selected course indicates a “to” condition. Pointing away from the selected course indicates a “from” condition.
VOR1 FROM	TO/FROM annunciation	AIII approach, IMC	Displayed below the VOR system source annunciation. Indicates movement to or from a VOR station.
ELV 426	Runway elevation	AIII approach	Indicates entered runway elevation for 5 seconds after AIII mode is selected or if elevation value is changed during AIII mode operation.
	Runway edge lines	AIII approach	Displayed between 300 and 60 feet radio altitude. The lines are scaled to a width of 200 feet and a length of 8000 feet. Tic marks are displayed at the touchdown aimpoint representing 1050 feet from the runway threshold.

Copyright © The Boeing Company. See title page for details.

SYMBOL	NAME	MODE	REMARKS
IDLE	IDLE message	AIII approach	Displayed below the radio altitude when flare guidance commands a thrust reduction to idle for touchdown. Message is displayed between 25 and 5 feet radio altitude, continuing until touchdown.
ALIGN HUD	ALIGN HUD message	IMC, VMC	Indicates the combiner is not properly aligned with the OHU.
IMC or VMC or AIII	HUD system mode	AIII approach, AIII rollout, IMC, VMC	Indicates current HUD system mode. The PRI mode is not indicated as it is uniquely identifiable by the airspeed and altitude tapes.
AIII	AIII approach status	PRI in flight	A flashing "AIII" indicates availability of AIII approach mode.
AIII or NO AIII		AIII approach	Indicates AIII mode selection once all AIII approach requirements have been satisfied. If AIII capability is lost, the "NO AIII" status message is displayed.
APCH WARN	Approach warning	AIII approach	Displayed below 500 feet if approach monitoring tolerances are exceeded or AIII capability is lost.

Copyright © The Boeing Company. See title page for details.

TCAS Resolution Advisory

SYMBOL	NAME	MODE	REMARKS
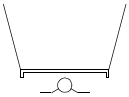	Down preventive	PRI in flight, AIII approach, IMC, VMC	Area(s) inside the lines indicate the pitch region(s) to avoid in order to resolve the traffic conflict. The flight path symbol should be positioned outside the pitch command area(s) to ensure traffic avoidance. A double-lined box indicates a corrective action is required, and represents TCAS maneuver guidance to maintain or increase separation from the traffic.
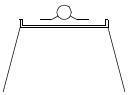	Up preventive		
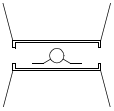	Up and down preventive		
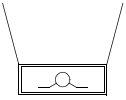	Descend corrective		
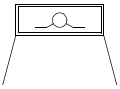	Climb corrective		
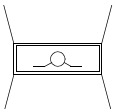	Combined corrective		

Copyright © The Boeing Company. See title page for details.

Failure Flags and Data Source Annunciations

SYMBOL	NAME	MODE	REMARKS
ATT	IRS attitude flag	All	IRS pitch or roll attitude has failed.
PITCH	Pitch miscompare flag	All	Indicates a pitch miscompare of greater than 5 ° for more than 1.5 seconds.
ROLL	Roll miscompare flag	All	Indicates a roll miscompare of greater than 5 ° for more than 1.5 seconds.
HDG	Heading flag	All	Heading data has failed.
H ---	No heading	All	IRU heading has no computed data.
S P D	Airspeed flag	All	Airspeed information has failed. In PRI mode, if airspeed has no computed data, airspeed data is removed and no failure flag is displayed. The boxed characters are positioned vertically in the PRI mode or horizontally in the AIII, IMC or VMC modes.

Copyright © The Boeing Company. See title page for details.

SYMBOL	NAME	MODE	REMARKS
ALT	Altitude flag	All	Altitude information has failed. In PRI mode, if altitude has no computed data, altitude data is removed and no failure flag is displayed. The boxed characters are positioned vertically in the PRI mode or horizontally in the AIII, IMC or VMC modes.
NO VSPD	Decision speed flag	PRI ground	V1 decision speed or VR rotation speed has not been entered or is invalid.
SPD LIM	Speed limit flag	PRI in flight, PRI ground	Maximum operating speed data has failed.
MACH	Mach flag	PRI in flight, PRI ground	MACH airspeed has failed.
VS	Vertical speed flag	All	Vertical speed has failed. In PRI mode, a vertical speed failure may be indicated by a dashed line to the left of the flag.
--- VS	Vertical speed	PRI in flight, AIII approach, IMC, VMC	Vertical speed has no computed data.
SEL ALT	Selected altitude flag	PRI in flight, PRI ground	Selected altitude has failed.
SEL SPD	Selected airspeed flag	All	Selected speed has failed.

Copyright © The Boeing Company. See title page for details.

SYMBOL	NAME	MODE	REMARKS
RA	Radio altitude flag	All	Radio altitude has failed.
LOC CMP	Localizer miscompare flag	PRI in flight PRI ground	Localizer miscompare has occurred during low visibility takeoff.
VTK	Vertical deviation flag	PRI in flight, IMC	FMC vertical track data is invalid. Vertical deviation pointer is removed if there is no computed data.
DME	DME flag	All	DME has failed.
DME ---	DME	All	DME has no computed data.
FD	Flight director flag	PRI in flight, PRI ground, IMC	Flight director has failed.
TCAS FAIL	TCAS fault	PRI in flight, AIII approach, IMC, VMC	TCAS has a fault.
ATT2	Right (#2) IRS source	All	All IRS information used or displayed by the HUD is taken from the right (#2) IRS.
G/S	Glideslope flag	PRI in flight, AIII approach, IMC	Glideslope data has failed.

Copyright © The Boeing Company. See title page for details.

SYMBOL	NAME	MODE	REMARKS
---	Ground speed	All	Ground speed has no computed data.
LOC	Lateral deviation fault	PRI in flight, PRI ground	Localizer deviation not valid or VOR bearing not valid.
--- NM	Distance to next waypoint	PRI in flight, AIII approach, IMC, VMC	Distance to next waypoint has no computed data.
DH	Decision height flag	PRI in flight, AIII approach, IMC	Decision height data has failed. Displayed below 1500 feet radio altitude.

Copyright © The Boeing Company. See title page for details.

Controls and Indicators 11.10.1

Flight Management System 11.10.1
Control Display Unit (CDU) 11.10.1
Function and Execute Keys 11.10.4
Alpha/Numeric and Miscellaneous Keys 11.10.7
CDU Page Components 11.10.9
CDU Page Color 11.10.10
FMC Source Select Switch 11.10.12
FMC Alert Light 11.10.12

Global Positioning System (GPS) Light 11.10.13

Inertial System 11.10.14
IRS Display Unit (ISDU). 11.10.14
IRS Mode Selector Unit. 11.10.16
IRS Transfer Switch. 11.10.18

Radio Navigation Systems 11.10.19
Automatic Direction Finding (ADF) Control 11.10.19
Marker Beacon Annunciations 11.10.21
VHF Navigation Control 11.10.22
VHF NAV Transfer Switch 11.10.24
Transponder Panel 11.10.24
Weather Radar Panel 11.10.27

Navigation Systems Description 11.20.1

Introduction 11.20.1

Flight Management System 11.20.1

Global Positioning System (GPS). 11.20.2
GPS Displays 11.20.2
GPS Data 11.20.3
GPS System Schematic 11.20.4

Inertial System 11.20.5

Copyright © The Boeing Company. See title page for details.

Inertial Reference System 11.20.5
Inertial System Display Unit (ISDU) 11.20.7
Mode Select Unit (MSU) 11.20.7
IRS Transfer Switch 11.20.7
IRS Instrument Transfer Switch Schematic 11.20.8
Radio Navigation Systems 11.20.8
Automatic Direction Finding (ADF) 11.20.8
Distance Measuring Equipment (DME) 11.20.9
Instrument Landing System (ILS) 11.20.9
Navaid Identifier Decoding 11.20.9
Marker Beacon 11.20.10
Very High Frequency Omni Range (VOR) 11.20.10
VHF NAV Transfer Switch 11.20.10
ATC Transponder 11.20.10
Weather Radar 11.20.11

Flight Management System Description 11.30.1
Introduction 11.30.1
Flight Management Computer (FMC) 11.30.1
Control Display Units (CDUs) 11.30.3

Flight Management System Operation 11.31.1
Introduction 11.31.1
Preflight 11.31.1
Takeoff 11.31.2
Climb 11.31.2
Cruise 11.31.2
Descent 11.31.2
Approach 11.31.2
Flight Complete 11.31.2
FMC and CDU Terminology 11.31.2
Maintenance Index Page 11.31.4
Navigation Position 11.31.4

Copyright © The Boeing Company. See title page for details.

FMC Position Update 11.31.5
Navigation Performance 11.31.6
Actual Navigation Performance 11.31.8
Lateral Navigation (LNAV) 11.31.10
Waypoints 11.31.10
Navigation Displays 11.31.16
Vertical Navigation (VNAV). 11.31.16
Speed/Altitude Restrictions 11.31.17
Takeoff and Climb 11.31.18
MCP Altitude Intervention 11.31.20
Cruise. 11.31.21
MCP Speed Intervention 11.31.22
Descent 11.31.23
Early Descent. 11.31.33
Approach 11.31.34
Go-Around. 11.31.35
VNAV Cruise (Engine Out Above Eng Out Max Alt) 11.31.37
Required Time of Arrival (RTA) 11.31.38
Data Entry Rules. 11.31.38
Altitude Entry 11.31.38
Airspeed Entry. 11.31.39
Data Pairs. 11.31.40
Bearing Entry. 11.31.40
Plus/Minus Signs 11.31.40

Flight Management Computer. 11.32.1
FMC Databases. 11.32.1
Thrust Management 11.32.2
Reduced Thrust Takeoff. 11.32.3
Takeoff Bump Thrust. 11.32.4
Derated Thrust Climb 11.32.4
Fuel Monitoring 11.32.5
Loss of FMC Electrical Power 11.32.5

Copyright © The Boeing Company. See title page for details.

FMC Failure 11.32.6
Single FMC Failure 11.32.6
Dual FMC Failure 11.32.7
FMC Failure 11.32.7

Company Data Link. 11.33.1

Company Data Link 11.33.1
Data Link 11.33.2
Manual Downlinks 11.33.2
Automatic Downlinks 11.33.3
Uplinks 11.33.3
Long Delete Function. 11.33.4
Requests 11.33.4
Request Status 11.33.5
FMC Data Link Uplinks (Accept/Reject) 11.33.6
FMC Data Link Uplinks (Load/Activate/Exec). 11.33.7
FMC Data Link Uplinks (Load/Exec–Erase). 11.33.8
FMC Data Link Uplinks (Request) 11.33.9
FMC Data Link Uplinks (Automatic) 11.33.10
Data Link Management 11.33.10
CDU Data Link Status Displays. 11.33.11
FMC Communications Page 11.33.12

FMC Preflight. 11.40.1

Introduction 11.40.1
Preflight Page Sequence 11.40.1
Minimum Preflight Sequence 11.40.2
Supplementary Pages 11.40.2
Preflight Pages. 11.40.4
Initialization/Reference Index Page 11.40.4
Identification Page 11.40.7
Position Initialization Page 1/3 . . . . . 11.40.9
Position Reference Page 2/3. . . . . 11.40.12
Route Page 1/X 11.40.14

Copyright © The Boeing Company. See title page for details.

Additional Route Page Prompts for an Activated Route 11.40.21
Departure/Arrival Index Page 11.40.23
Departures Page 11.40.25
Performance Initialization Page 11.40.27
Performance Limits Page 11.40.33
N1 LIMIT Page - Preflight 11.40.36
Takeoff Reference Page 1/2 . . . . . 11.40.42
Takeoff Reference Page 2/2 . . . . . 11.40.58
Menu Page 11.40.65

FMC Takeoff and Climb 11.41.1

Introduction 11.41.1
Takeoff Phase 11.41.1
Climb Phase 11.41.2
Climb Page 11.41.3
RTA Climb Page 11.41.8
RTE LEGS Page 11.41.9
Progress Page 1/X 11.41.13
RTA Progress Page 2/3 . . . . . 11.41.16
Progress Page 3/3 . . . . . 11.41.21
Progress Page 2/4 . . . . . 11.41.24
RTA Progress Page 3/4 . . . . . 11.41.26
RNP Progress Page 4/4 . . . . . 11.41.31
N1 Limit Page 11.41.33
Engine Out Climb 11.41.35
Engine Out Climb Page 11.41.35
Air Turnback 11.41.37
Arrivals Page 11.41.37

FMC Cruise 11.42.1

Introduction 11.42.1
LNAV Modifications 11.42.1

Copyright © The Boeing Company. See title page for details.

RTE LEGS Page Modifications 11.42.2
Progress Page 11.42.4
Deleting Waypoints 11.42.4
Resequencing Waypoints 11.42.6
Leg Bypass 11.42.7
Removing Discontinuities 11.42.7
Direct To and Intercept Course 11.42.9
Abeam Points 11.42.13
Select Desired Waypoint Page 11.42.15
Lateral Offset 11.42.16
VNAV Modifications. 11.42.18
Cruise Page. 11.42.18
RTA Cruise 11.42.21
Cruise with Step Climb 11.42.22
Cruise Climb 11.42.24
RTA Cruise Climb 11.42.26
Cruise Descent 11.42.27
RTA Cruise Descent 11.42.29
Engine Out Cruise 11.42.30
Early Descent 11.42.32
Route and Waypoint Data 11.42.33
Route Data (RTE DATA) Page. 11.42.33
Position Shift Page 3/3 . . . . . 11.42.36
Inflight Position Update 11.42.39
Navigation Data. 11.42.41
Reference Navigation Data (REF NAV DATA) Page 11.42.41
Waypoint Data Display 11.42.43
Navigation Aid Data Display 11.42.44
Airport Data Display 11.42.45
Runway Data Display 11.42.46
Navigation Summary (NAV SUMMARY) 11.42.47
Supplemental Nav Data 11.42.48
Navigation Status Display 11.42.51

Copyright © The Boeing Company. See title page for details.

Navigation Options (NAV OPTIONS) 11.42.53
Fix Information Page 11.42.54

FMC Descent and Approach 11.43.1

Introduction. 11.43.1
Early Descent 11.43.1
Descent 11.43.1
Descent Page (During Cruise) 11.43.1
Descent Page (During Descent). 11.43.6
RTA Descent Page 11.43.9
Descent Forecast Page 11.43.10
Engine Out Descent 11.43.12
Approach. 11.43.13
Arrivals Page – IFR Approaches 11.43.13
Approach Reference Page 11.43.20
Alternate Airport Diversions. 11.43.26
Alternate Dests Page 1/X. 11.43.26
Alternate Dests Page X/X. 11.43.28
HOLD Page. 11.43.31
RTE LEGS HOLD At (Fix in Route) 11.43.37
RTE LEGS HOLD AT (Fix not in Route) 11.43.39

FMC Messages 11.60.1

Introduction. 11.60.1
FMC Alerting Messages 11.60.2
FMC Entry Error Messages 11.60.10
FMC Advisory Messages 11.60.12
FMC Data Link Messages 11.60.17
FMC Data Link Alerting Messages. 11.60.17
FMC Data Link Advisory Messages 11.60.22

Copyright © The Boeing Company. See title page for details.

DO NOT USE FOR FLIGHT

Intentionally
Blank

Copyright © The Boeing Company. See title page for details.

Flight Management System

Control Display Unit (CDU)

[Option – Liquid crystal display CDU]

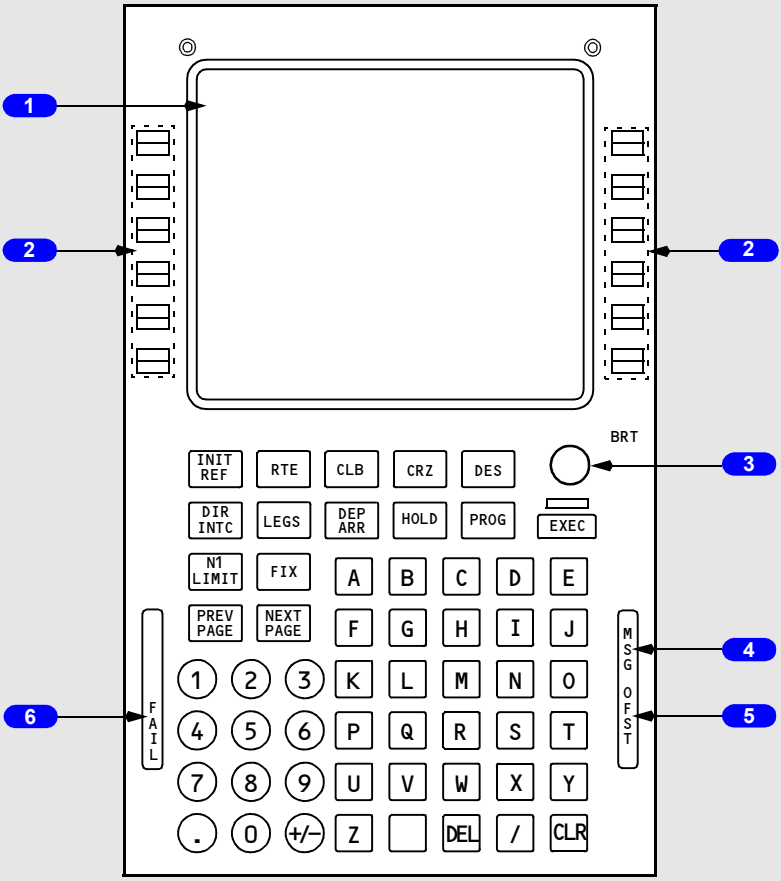

FORWARD ELECTRONIC PANEL

Copyright © The Boeing Company. See title page for details.

DO NOT USE FOR FLIGHT

[Option – Liquid crystal display MCDU]

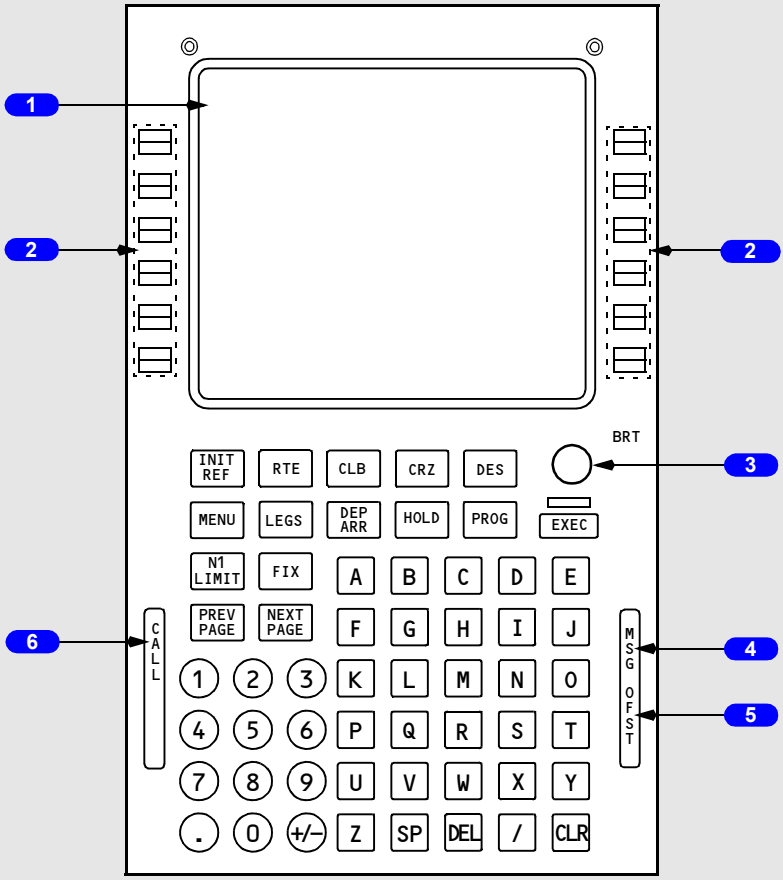

FORWARD ELECTRONIC PANEL

Copyright © The Boeing Company. See title page for details.

[Option – Liquid crystal display FANS MCDU]

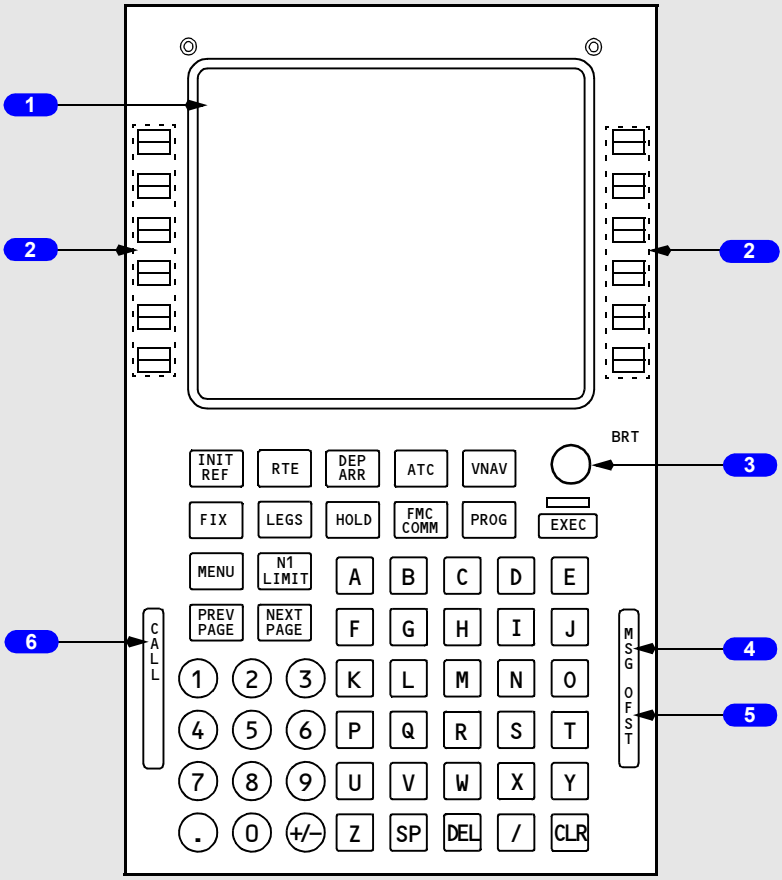

FORWARD ELECTRONIC PANEL

1 Control Display Unit (CDU) Display

Shows FMS data pages.

2 Line Select Keys

Push –

- moves data from scratchpad to selected line
- moves data from selected line to scratchpad
- selects page, procedure, or performance mode as applicable
- deletes data from selected line when DELETE is shown in scratchpad.

Copyright © The Boeing Company. See title page for details.

DO NOT USE FOR FLIGHT

3 Brightness Control

Rotate – controls display brightness.

4 Message (MSG) Light

Illuminated (white) – scratchpad message is shown.

5 Offset (OFST) Light

Illuminated (white) – LNAV gives guidance for lateral route offset.

6 Call (CALL) Light
[Option – MCDU]

Illuminated (white) – a subsystem other than the FMC is requesting control of the CDU.

6 Fail (FAIL) Light
[Option – CDU with single FMC]

Illuminated (amber) – the FMC has failed.

Function and Execute Keys

[Option – Liquid crystal display CDU]

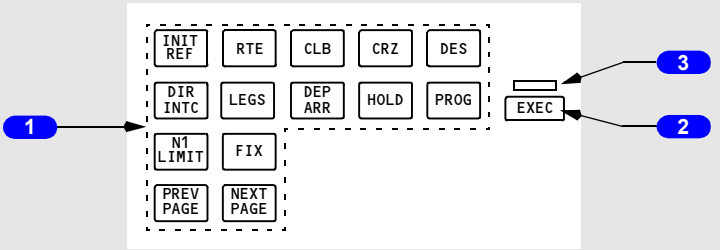

CDU

Copyright © The Boeing Company. See title page for details.

[Option – Liquid crystal display MCDU]

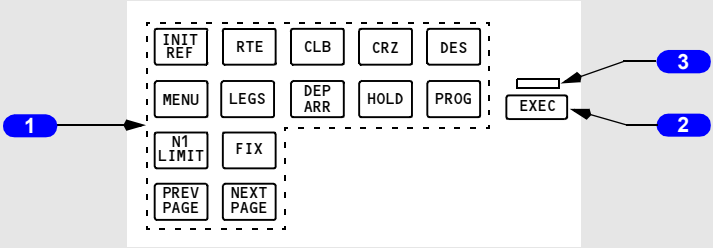

CDU

1 CDU Function Keys

Push –

- INIT REF – shows page for data initialization or for reference data
- RTE – shows page to input or change origin, destination, or route
- CLB – shows page to view or change climb data
- CRZ – shows page to view or change cruise data
- DES – shows page to view or change descent data

[Option – CDU]

- DIR INTC – shows page to modify route to fly directly from present position to any waypoint or to intercept any course to any waypoint

[Option – MCDU]

- MENU – shows page to choose subsystems controlled by CDU
- LEGS –
  - shows page to evaluate or modify lateral and vertical data
  - shows page to control PLAN mode display
- DEP ARR – shows page to input or change departure and arrival procedures
- HOLD – shows page to create holding patterns and show holding pattern data
- PROG – shows page to view dynamic flight and navigation data, including waypoint and destination ETAs, fuel remaining, and arrival estimates
- N1 LIMIT – shows page to view or change N1 thrust limits
- FIX – shows page to create reference points on map display
- PREV PAGE – shows previous page of related pages (for example, LEGS pages)
- NEXT PAGE – shows next page of related pages.

Copyright © The Boeing Company. See title page for details.

DO NOT USE FOR FLIGHT

2 Execute (EXEC) Key

Push –

- makes data modification(s) active
- extinguishes execute light.

3 Execute Light

Illuminated (white) – active data is modified but not executed.

[Option – Liquid crystal display FANS MCDU]

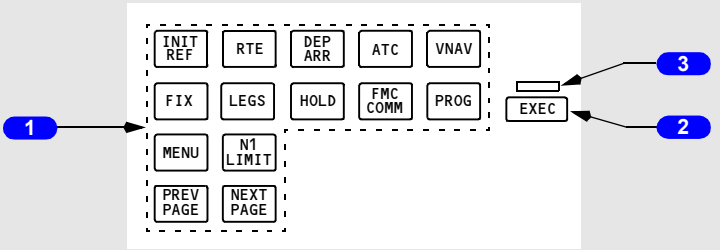

CDU

1 CDU Function Keys

Push –

- INIT REF – shows page for data initialization or for reference data
- RTE – shows page to input or change origin, destination, or route
- DEP ARR – shows page to input or change departure and arrival procedures
- ATC – inoperative (scratchpad message KEY/FUNCTION INOP displayed)
- VNAV –
  - shows currently active performance page (CLB, CRZ, DES)
  - CLB page is displayed if no active phase exists
- FIX – shows page to create reference points on map display
- LEGS –
  - shows page to evaluate or modify lateral and vertical route data
  - shows page to control PLAN mode display
- HOLD – shows page to create holding patterns and show holding pattern data

[Option – With AOC data link]

- FMC COMM – displays FMC COMM status page.

Copyright © The Boeing Company. See title page for details.

- PROG – shows page to view dynamic flight and navigation data, including waypoint and destination ETAs, fuel remaining, and arrival estimates
- MENU – shows page to choose subsystems controlled by CDU
- N1 LIMIT – shows page to view or change N1 thrust limits
- PREV PAGE – shows previous page of related pages (for example, LEGS pages)
- NEXT PAGE – shows next page of related pages.

2 Execute (EXEC) Key

Push –

- makes data modification(s) active
- extinguishes execute light.

3 Execute Light

Illuminated (white) – active data is modified but not executed.

Alpha/Numeric and Miscellaneous Keys

[Option – CDU]

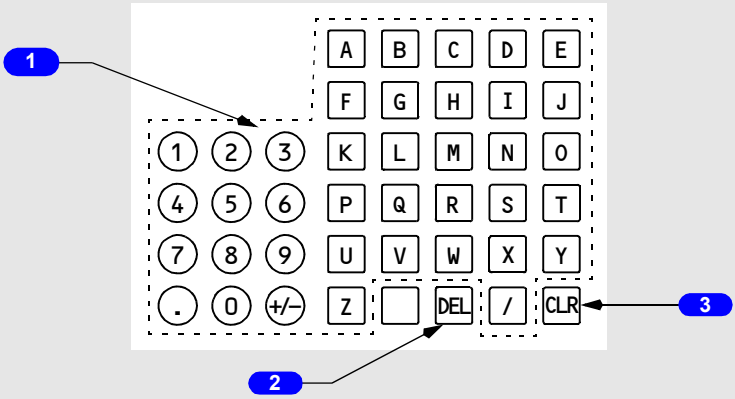

CDU

Copyright © The Boeing Company. See title page for details.

DO NOT USE FOR FLIGHT

[Option – MCDU]

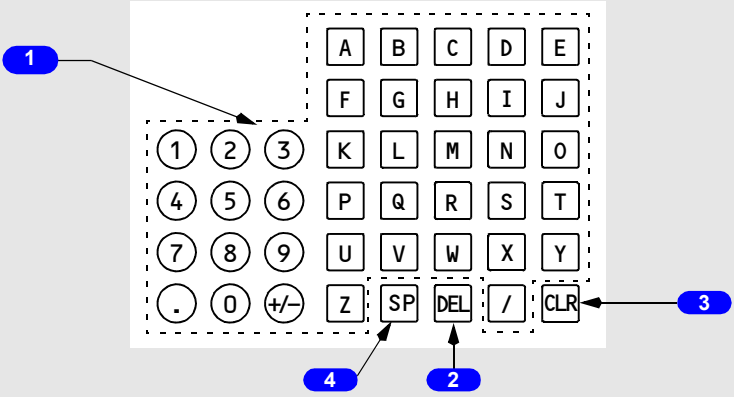

CDU

1 Alpha/Numeric Keys

Push –

- puts selected character in scratchpad
- Slash (/) key – puts "/" in scratchpad
- Plus Minus (+/–) key – first push puts "–" in scratchpad. Subsequent pushes alternate between "+" and "–".

2 Delete (DEL) Key

Push – puts DELETE in scratchpad.

3 Clear (CLR) Key

Push –

- clears the last scratchpad character
- clears scratchpad message.

Push and hold – clears all scratchpad data.

4 Space (SP) Key
[Option – MCDU]

Push – puts space in scratchpad.

Copyright © The Boeing Company. See title page for details.

CDU Page Components

[Option – FMC U10.3 and later with flight number entry]

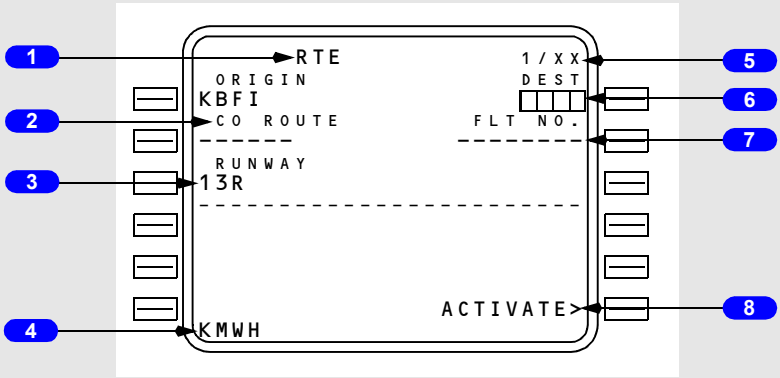

CDU

1 Page Title

Subject or name of data shown on page.

ACT (active) or MOD (modified) shows whether page contains active or modified data.

2 Line Title

Title of data on line below.

3 Line

Shows –

- prompts
- selections
- options
- data.

4 Scratchpad

Shows messages, alpha–numeric entries or line selected data.

5 Page Number

Left number is page number. Right number is total number of related pages.

Copyright © The Boeing Company. See title page for details.

DO NOT USE FOR FLIGHT

6 Boxes

Data input is mandatory.

7 Dashes

Data input is optional. The data is not mandatory.

8 Prompts

Show pages, select modes, and control displays. Caret “<” or “>” is before or after prompt.

CDU Page Color

[Option]

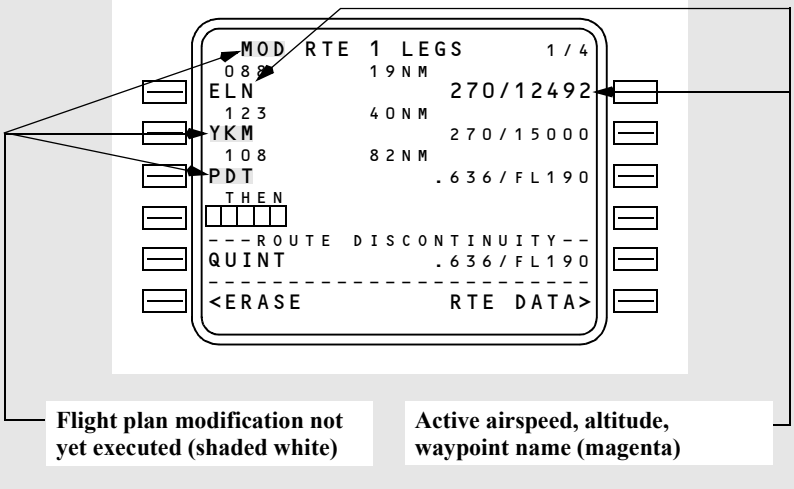

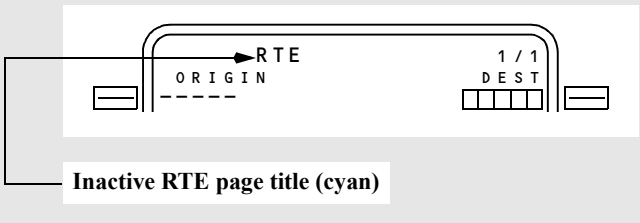

Copyright © The Boeing Company. See title page for details.

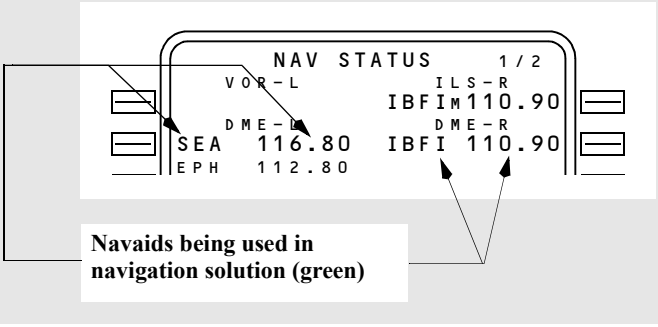

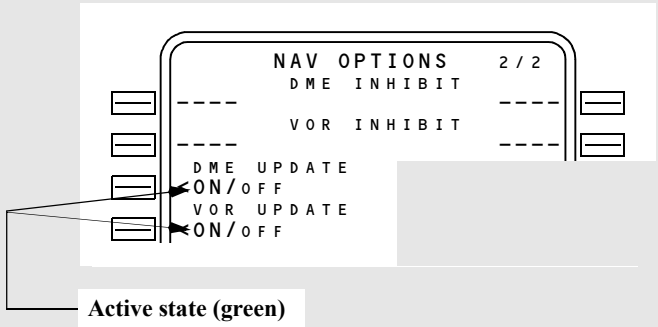

Color is used as follows:

- black – background color of page
- cyan –
  - inactive RTE page title
- green –
  - actively tuned VOR, ILS, or DME data (frequency, station ID, course)
  - active state of two–position and three–position selectors.
- magenta – data used by FMC for lateral and vertical flight commands
  - active waypoint
  - active airspeed
  - active altitude
- shaded white –
  - modifications
  - MOD precedes page titles of modified pages
- white – most data.

Copyright © The Boeing Company. See title page for details.

DO NOT USE FOR FLIGHT

FMC Source Select Switch

[Option – Dual FMC]

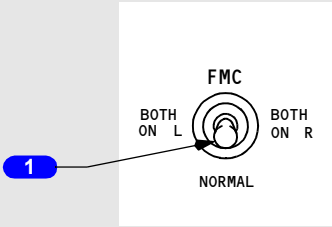

FORWARD OVERHEAD PANEL

1 FMC Source Select Switch

BOTH ON L –

- selects left FMC for all FMC operations
- right map will annunciate “FMC L.”

NORMAL –

- left FMC controls CDUs and provides input to the autothrottle system
- right FMC operates in synchronization with left FMC
- maps display composite information from both FMCs

BOTH ON R –

- selects right FMC for all FMC operations
- left map will annunciate “FMC R.”

Note: Moving the source select switch will cause LNAV and VNAV to disengage.

FMC Alert Light

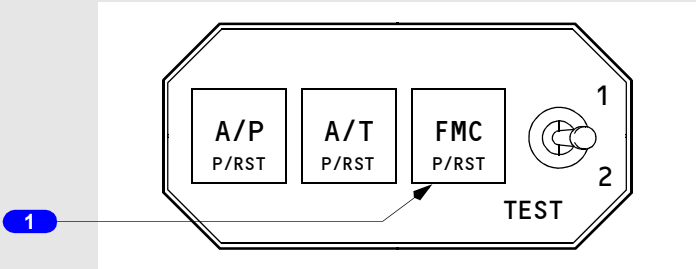

LEFT FORWARD PANEL
RIGHT FORWARD PANEL

Copyright © The Boeing Company. See title page for details.

1 FMC Alert Light

Illuminated (amber) –

[Option – CDU]

- the FAIL light on CDU(s) is illuminated, or
- an alerting message exists for both CDUs, or
- test switch is in position 1 or 2.

Push – both pilots' FMC alert lights extinguish.

Global Positioning System (GPS) Light

[Option]

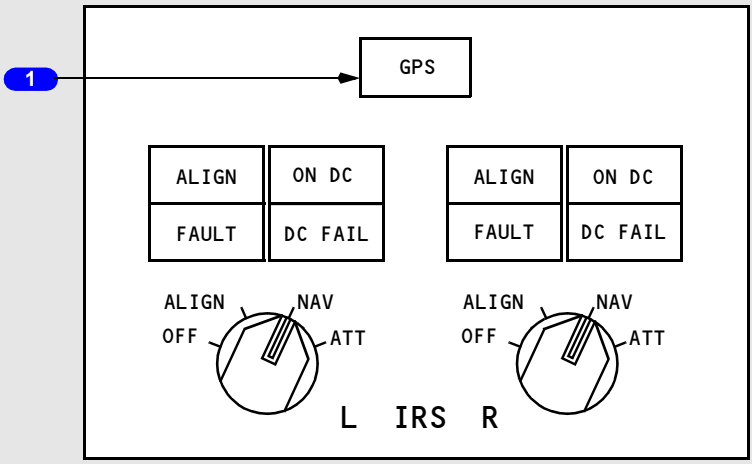

AFT OVERHEAD PANEL

1 Global Positioning System (GPS) Light

Illuminated (amber) –

- indicates failure of both GPS sensor units
- indicates failure of a single GPS sensor unit when either system annunciator panel is pushed.

Copyright © The Boeing Company. See title page for details.

DO NOT USE FOR FLIGHT

Inertial System

IRS Display Unit (ISDU)

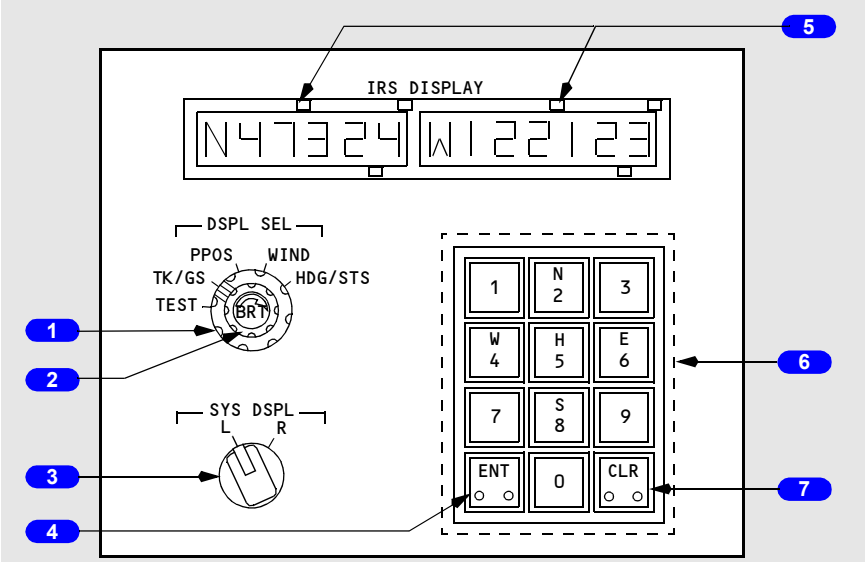

AFT OVERHEAD PANEL

1 Display Selector (DSPL SEL)

TEST (spring–loaded to TK/GS) –

- all lights in data displays and on the mode selector unit momentarily illuminate, followed by a 10 second self–test
- use only during alignment.

TK/GS –

- left window displays true track (course)
- right window displays present ground speed (knots).

PPOS –

- left window displays present latitude
- right window displays present longitude.

WIND –

- left window displays present inflight true wind direction
- right window displays present inflight wind speed (knots).

Copyright © The Boeing Company. See title page for details.

HDG/STS –

- left window displays present true heading
- right window displays any applicable maintenance status codes
- during alignment, right window displays minutes remaining until alignment is complete. For alignments greater than 15 minutes, the window displays 15 until the time remaining reaches 14 minutes. The display then counts down in one minute intervals.

2 Brightness (BRT) Control

Rotate – adjusts brightness of the data displays.

3 System Display (SYS DSPL) Selector

L – selects left IRS for the data displays.

R – selects right IRS for the data displays.

4 Enter (ENT) Key

Illuminated (white) – N, S, E, W, or H entries are being keyed.

Push – keyed data is entered into IRS following completion of valid self–test for reasonableness.

5 Data Displays

Two windows display data for the IRS selected with the system display selector

- type of data displayed is normally determined by the display selector
- keyboard entry of present position or magnetic heading overrides the selected display
- last digit of each window is for a decimal place (tenths).

6 Keyboard

Push –

- alpha keys:
  - data displays are controlled by the keyboard when the N, S, E, W (latitude/longitude) or H (heading) keys are pushed
  - pushing an alpha key arms the keyboard for numeric entries.
- numeric keys:
  - permit manual entry of present position when ALIGN light is illuminated
  - permit manual entry of magnetic heading when either mode selector is in ATT.

Copyright © The Boeing Company. See title page for details.

DO NOT USE FOR FLIGHT

7 Clear (CLR) Key

Illuminated (white) – an ENT attempt has failed (entry not accepted by IRS).

Push – clears data display of any data not yet entered or accepted. If illuminated, cue lights extinguish.

IRS Mode Selector Unit

[Option – With GPS]

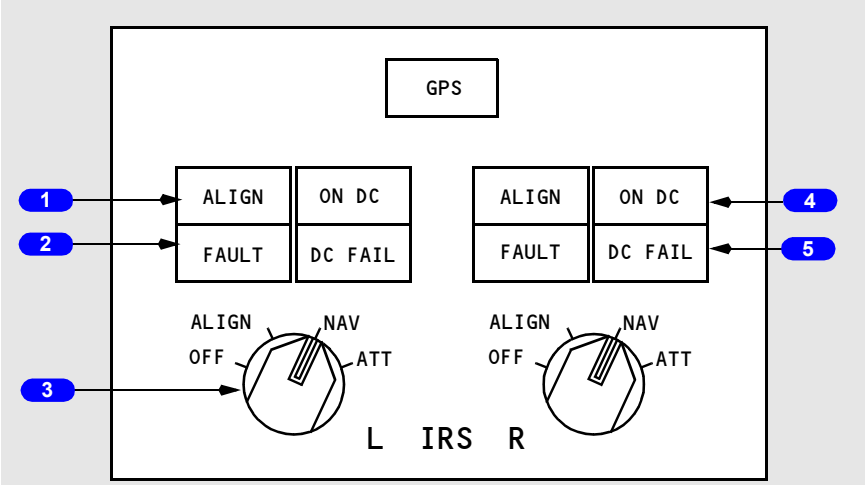

AFT OVERHEAD PANEL

1 ALIGN Light

Illuminated (white) –

- steady – the related IRS is operating in the ALIGN mode, the initial ATT mode, or the shutdown cycle
- flashing – alignment cannot be completed due to IRS detection of:
  - significant difference between previous and entered positions or an unreasonable present position entry
  - no present position entry.

Extinguished –

- IRS not in ALIGN mode
- with mode selector in NAV, alignment is complete, and all IRS information is available
- with mode selector in ATT, attitude information is available. Heading information is available following entry of initial magnetic heading.

Copyright © The Boeing Company. See title page for details.

2 FAULT Light

Illuminated (amber) – a system fault affecting the related IRS ATT and/or NAV modes has been detected.

3 Inertial Reference System (IRS) Mode Selector

OFF –

- alignment is lost
- all electrical power is removed from the system after a 30 second shutdown cycle.

ALIGN –

- rotating the selector from OFF to ALIGN initiates the alignment cycle
- rotating the selector from NAV to ALIGN automatically updates alignment and zeroes ground speed error.

NAV (detented position) –

- system enters the NAV mode after completion of the alignment cycle and entry of present position
- in NAV mode, all IRS information is available to airplane systems for normal operations.

ATT – provides only attitude and heading information:

- attitude information is invalid (attitude flag in view) until ALIGN light is extinguished
- heading information is invalid (heading flags in view) until the actual magnetic heading is manually entered and the ALIGN light is extinguished
- position and ground speed information is not available until the IRS is aligned on the ground
- the selector must be cycled to OFF before reselecting ALIGN or NAV.

4 ON DC Light

Illuminated (amber) –

- the related IRS is operating on DC power from the switched hot battery bus (AC power not normal)
- if on the ground, the ground–call horn in the nose wheel well sounds, providing an alert that a battery drain condition exists
- momentary illumination is normal during alignment self–test.

Copyright © The Boeing Company. See title page for details.

DO NOT USE FOR FLIGHT

5 DC FAIL Light

Illuminated (amber) –

- DC power for the related IRS is not normal
- if the other lights are extinguished, the IRS is operating normally on AC power.

IRS Transfer Switch

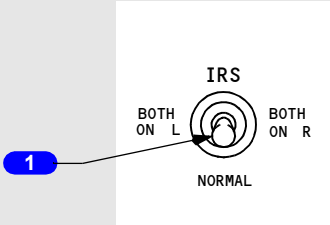

FORWARD OVERHEAD PANEL

1 Inertial Reference System (IRS) Transfer Switch

BOTH ON L – switches the flight instruments attitude and heading source to left IRS.

NORMAL – flight instruments attitude and heading source is from default IRS.

BOTH ON R – switches the flight instruments attitude and heading source to right IRS.

Copyright © The Boeing Company. See title page for details.

Radio Navigation Systems

Automatic Direction Finding (ADF) Control

[Option – Gables G7403-03]

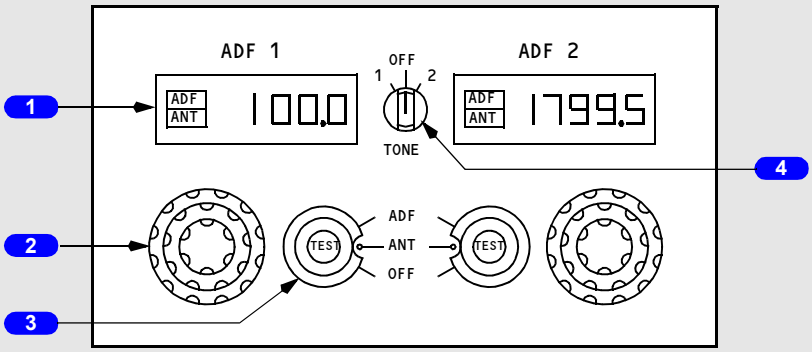

AFT ELECTRONIC PANEL

1 Frequency Indicator

Shows the frequency selected with the related frequency selector.

Shows if the system is in the ADF or antenna (ANT) mode.

2 Frequency Selector

Rotate –

- outer knob sets the hundreds number
- middle knob sets the tens number
- inner knob sets the tenths and ones number.

3 Mode Selector Switch

ADF –

- audio reception possible
- ADF bearing sent to the DUs and the standby radio magnetic indicator.

ANT –

- audio reception optimized
- no ADF bearing data available.

OFF – removes power from selected receiver.

Copyright © The Boeing Company. See title page for details.

DO NOT USE FOR FLIGHT

TEST – tests related ADF bearing pointers and warning flags on the DUs and the standby radio magnetic indicator.

- DU ADF indications:
  - show ADF fail flag and ADF bearing pointer goes out of view
  - ADF fail flag goes out of view and ADF bearing pointer remains out of view
  - ADF bearing pointer slews to 135 degrees relative bearing.
- Standby radio magnetic indicator:
  - shows ADF fail flag
  - ADF fail flag goes out of view and ADF bearing pointer stays at its last position before test
  - ADF bearing pointer slews to 135 degrees relative bearing.

4 TONE Switch

1 – adds tone to ADF receiver No. 1 audio.

2 – adds tone to ADF receiver No. 2 audio.

OFF – disables tones.

[Option – Gables G7402-02, -05]

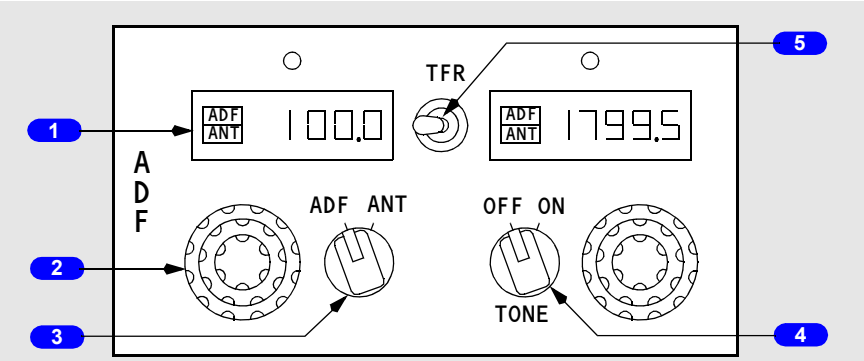

AFT ELECTRONIC PANEL

1 Frequency Indicator

Shows the frequency selected with the related frequency selector.

Shows if the system is in the ADF or antenna (ANT) mode.

Copyright © The Boeing Company. See title page for details.

2 Frequency Selector

Rotate –

- outer knob sets the hundreds number
- middle knob sets the tens number
- inner knob sets the tenths and ones number.

3 Mode Selector

ADF –

- audio reception possible
- ADF bearing sent to the DUs and the standby radio magnetic indicator.

ANT –

- audio reception optimized
- no ADF bearing data available.

4 TONE Switch

OFF – disables tones.

ON – adds tone to selected ADF receiver audio.

5 Transfer (TFR) Switch

Selects ADF for display.

Marker Beacon Annunciations

[Option – EFIS/MAP]

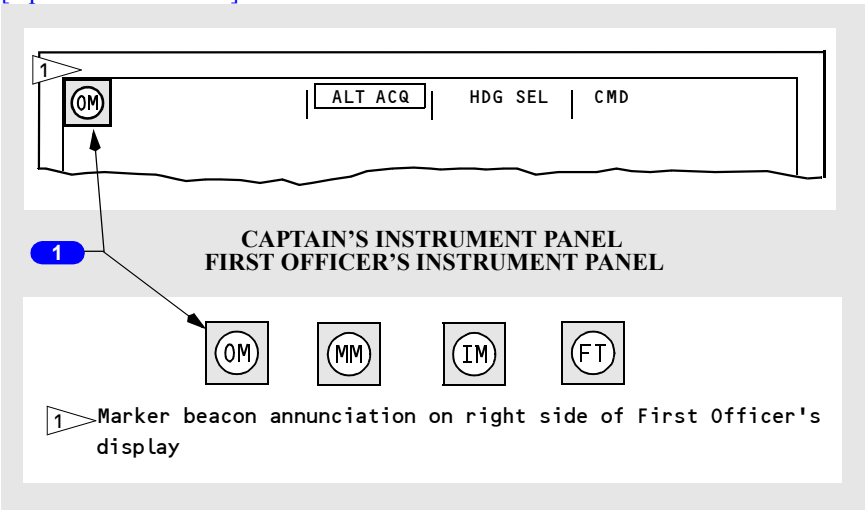

Copyright © The Boeing Company. See title page for details.

DO NOT USE FOR FLIGHT

[Option – PFD/ND]

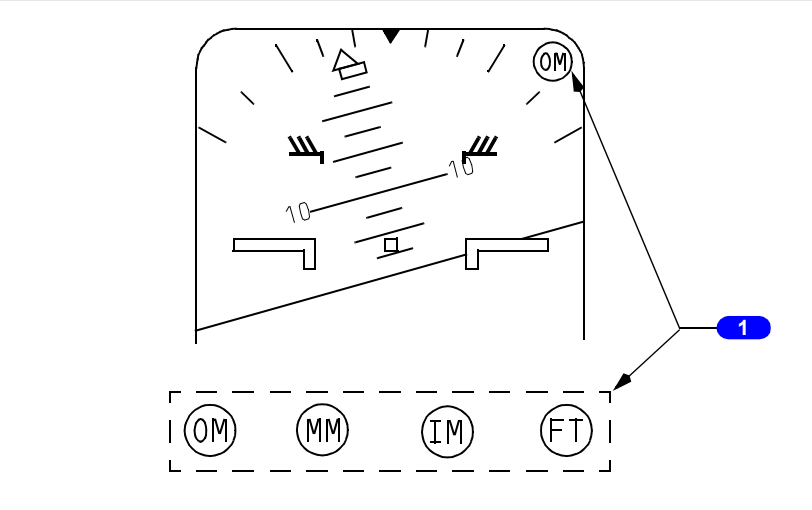

CAPTAIN'S INSTRUMENT PANEL
FIRST OFFICER'S INSTRUMENT PANEL

1 Marker Beacon Lights

OM (cyan) – illuminates over an outer marker beacon.

MM (amber) – illuminates over a middle marker beacon.

IM (white) – illuminates over an inner marker beacon.

FT (white) – illuminates during self test.

VHF Navigation Control

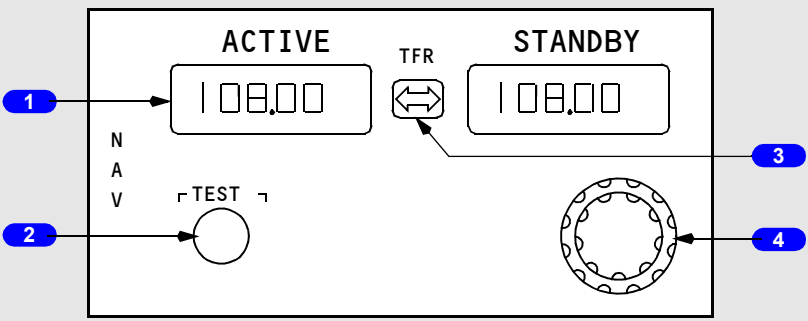

AFT ELECTRONIC PANEL

Copyright © The Boeing Company. See title page for details.

1 Frequency Indicator

Indicates the frequency selected by the frequency selector

- tuned frequency displayed in STANDBY display
- TFR switch moves STANDBY frequency to ACTIVE frequency.

2 TEST Switch

With a VOR frequency tuned and a course of 000 selected:

- shows VOR fail flag
- deviation bar biases out of view and then returns to centered position
- bearing pointer slews to 180 degrees.
- DME displays:
  - DME fail flag
  - dashes
  - normal DME distance

With ILS frequency tuned and a course within 90 degrees of airplane heading:

- pointers display one dot up and one dot left
- pointers then display one dot low and one dot right
- pointers then return to normal display.
- DME displays:
  - DME fail flag
  - dashes
  - normal DME distance

3 Transfer (TFR) Switch

TFR – STANDBY frequency moved to ACTIVE frequency; ACTIVE frequency moved to STANDBY frequency.

4 Frequency Selector

Rotate – manually selects the standby frequency.

Copyright © The Boeing Company. See title page for details.

DO NOT USE FOR FLIGHT

VHF NAV Transfer Switch

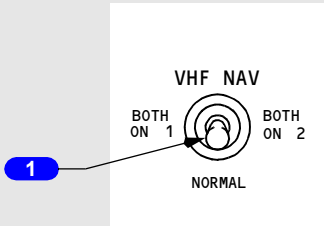

FORWARD OVERHEAD PANEL

1 VHF NAV Transfer Switch

BOTH ON 1 – switches the VHF navigation source to VHF NAV receiver No. 1.

NORMAL – VHF navigation source is from default VHF NAV receiver.

BOTH ON 2 – switches the VHF navigation source to VHF NAV receiver No. 2.

Transponder Panel

[Option – AlliedSignal 071-01503-2601]

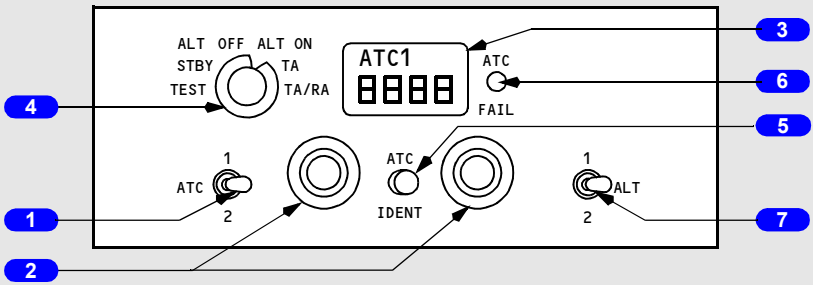

AFT ELECTRONIC PANEL

1 Transponder (ATC) Selector

1 – selects transponder No. 1.

2 – selects transponder No. 2.

2 Air Traffic Control (ATC) Code Selector

Rotate – sets transponder code in transponder.

3 Air Traffic Control (ATC) Code Indicator

Shows transponder code.

Copyright © The Boeing Company. See title page for details.

Shows operating transponder (1 or 2).

4 Transponder Mode Selector

TEST – starts ATC transponder functional test.

STBY (standby) – does not transmit.

ALT (altitude reporting) OFF – transponder operates without altitude reporting.

ALT (altitude reporting) ON – transponder operates with altitude reporting.

TA(traffic advisory) and TA/RA (resolution advisory) – Refer to Chapter 15, Warning Systems.

5 Identification (IDENT) Switch

Push – transmits an identification signal.

6 Transponder (ATC) FAIL Light

Illuminated (amber) – indicates transponder malfunction.

7 Altitude (ALT) Selector

1 – enables altitude reporting from air data computer No. 1.

2 – enables altitude reporting from air data computer No. 2.

[Option – Gables G6992-02]

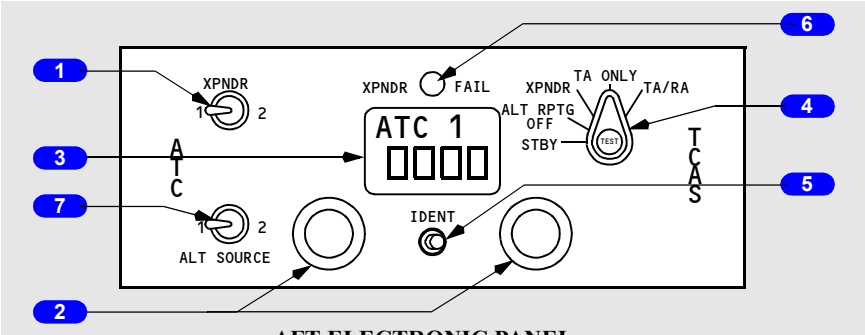

AFT ELECTRONIC PANEL

1 Transponder (XPNDR) Selector

1 – selects transponder No. 1.

2 – selects transponder No. 2.

2 Air Traffic Control (ATC) Code Selector

Rotate – sets transponder code in transponder.

Copyright © The Boeing Company. See title page for details.

DO NOT USE FOR FLIGHT

3 Air Traffic Control (ATC) Code Indicator

Shows transponder code.

Shows operating transponder (1 or 2).

4 Transponder Mode Selector

TEST – starts ATC transponder functional test.

STBY (standby) – does not transmit.

ALT RPTG (altitude reporting) OFF – transponder operates without altitude reporting.

XPNDR (transponder) – transponder operates with altitude reporting.

TA (traffic advisory) ONLY, and TA/RA (resolution advisory) – Refer to Chapter 15, Warning Systems.

5 Identification (IDENT) Switch

Push – transmits an identification signal.

6 Transponder (XPNDR) FAIL Light

Illuminated (amber) – indicates transponder malfunction.

7 Altitude (ALT) SOURCE Selector

1 – enables altitude reporting from air data computer No. 1.

2 – enables altitude reporting from air data computer No. 2.

Copyright © The Boeing Company. See title page for details.

Weather Radar Panel

[Option – AlliedSignal 2041223-0414]

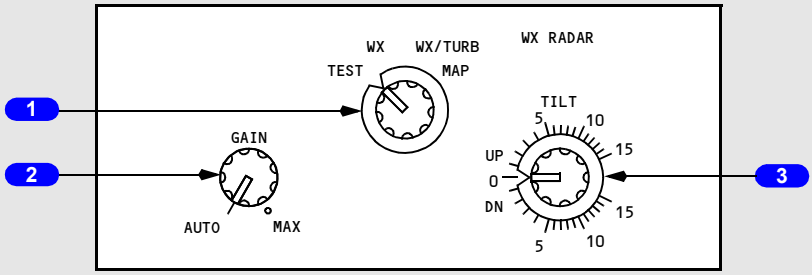

AFT ELECTRONIC PANEL

1 Mode Selector Switch

Rotate – selects mode.

TEST –

- tests weather radar system operation
- shows test pattern and any fault messages on navigation display MAP, center MAP, VOR, and APP modes, with WXR selected.

[Option – With predictive windshear]

Note: If the airplane is on the ground and the thrust levers are not advanced for takeoff, WXR tests the predictive windshear system (PWS) indications. These include PWS FAIL, PWS caution, and PWS warning. Deactivating WXR on the EFIS control panel will not discontinue the test and can result in automatic WXR activation on both pilot displays. The PWS test lasts approximately 15 seconds.

WX (weather) – shows weather radar returns at selected gain level.

WX/TURB (turbulence) –

- shows weather radar returns
- shows turbulence within 40 miles.

Note: Turbulence detection requires presence of detectable precipitation. Clear air turbulence cannot be detected by radar.

MAP – shows ground returns.

Copyright © The Boeing Company. See title page for details.

DO NOT USE FOR FLIGHT

2 GAIN Control

Rotate –

- sets receiver sensitivity to enhance ground mapping in MAP mode only
- system automatically sets gain in other modes.

AUTO (automatic) – gain control is automatic.

MAX (maximum) – reduces amount of ground return.

3 TILT Control

Rotate clockwise– radar antenna tilts up to selected degrees above horizon.

Rotate counterclockwise– radar antenna tilts down to selected degrees below horizon.

[Option – Collins 622-5129-105]

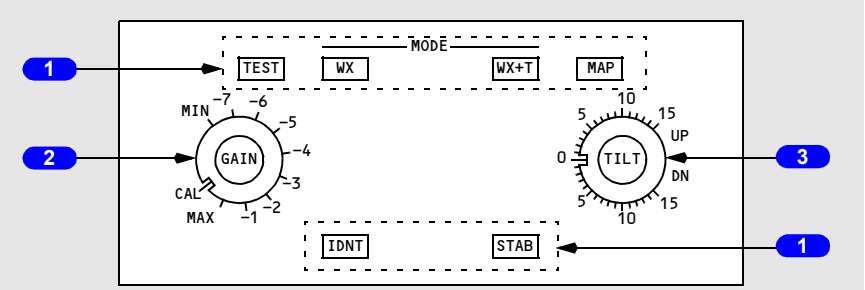

AFT ELECTRONIC PANEL

1 Mode Switches

Push – selects mode.

TEST –

- tests weather radar system operation without transmitting
- shows test pattern and any fault messages on navigation display MAP, center MAP, VOR, and APP modes, with WXR selected.

[Option – With predictive windshear]

Note: If the airplane is on the ground and the thrust levers are not advanced for takeoff, WXR tests the predictive windshear system (PWS) indications. These include PWS caution, PWS FAIL, and PWS warning. Deactivating WXR on the EFIS control panel will not discontinue the test and can result in automatic WXR activation on both pilot displays. The PWS test lasts approximately 15 seconds.

WX (weather) – shows weather radar returns at selected gain level.

Copyright © The Boeing Company. See title page for details.

WX+T (turbulence) –

- shows weather radar returns
- shows turbulence within 50 miles.

Note: Turbulence detection requires presence of detectable precipitation. Clear air turbulence cannot be detected by radar.

MAP – shows ground returns.

IDNT – suppresses ground return in WX and WX+T modes.

STAB – antenna tilt automatically adjusts to correct for airplane attitude changes.

2 GAIN Control

Rotate – sets receiver sensitivity in WX, WX+T, and MAP modes.

CAL (calibrated) – presets an optimum receiver sensitivity for best weather radar display.

3 TILT Control

Rotate clockwise – radar antenna tilts up to selected degrees above horizon.

Rotate counterclockwise – radar antenna tilts down to selected degrees below horizon.

Copyright © The Boeing Company. See title page for details.

DO NOT USE FOR FLIGHT

Intentionally
Blank

Copyright © The Boeing Company. See title page for details.

Introduction

[Option – With GPS]
Navigation systems include the flight management system (FMS); global positioning system (GPS); air data inertial reference system (ADIRS); radio navigation systems (ADF, DME, ILS, marker beacons, and VOR); transponder; and weather radar.

[Option – HUD]
Many of the flight instrument display symbols listed in this chapter also appear on the Heads Up Display (HUD) System. Refer to Chapter 10, Flight Instruments, for HUD system display symbol descriptions.

Flight Management System

The flight management system (FMS) is comprised of the following components:

- flight management computer system (FMCS)
- autopilot/flight director system (AFDS)
- autothrottle (A/T)
- inertial reference systems (IRS)
- global positioning system (GPS).

Each of these components is an independent system, and each can be used independently or in various combinations. The term FMS refers to the concept of joining these independent components together into one integrated system which provides continuous automatic navigation, guidance, and performance management.

The integrated FMS provides centralized flight deck control of the airplane's flight path and performance parameters. The flight management computer, or FMC, is the heart of the system, performing navigational and performance computations and providing control and guidance commands.

[Option – Dual FMC]
The primary flight deck controls are the AFDS MCP, two control display units (CDU's), two electronic flight instrument system (EFIS) control panels, and an FMC source selector switch. The primary displays are the CDUs, outboard display units, inboard display units, and upper display unit.

Copyright © The Boeing Company. See title page for details.

DO NOT USE FOR FLIGHT

[Option – Single FMC]
The primary flight deck controls are the AFDS MCP, two control display units (CDU's), two electronic flight instrument system (EFIS) control panels. The primary displays are the CDUs, outboard display units, inboard display units, and upper display unit.

The FMC uses crew entered flight plan information, airplane systems data, and data from the FMC navigation database and performance database to calculate airplane present position, and pitch, roll, and thrust commands required to fly an optimum flight profile. The FMC sends these commands to the autothrottle, autopilot, and flight director. Map and route information are sent to the respective pilot's navigation displays. The EFIS control panels are used to select the desired information for navigation display. The mode control panel is used to select the autothrottle, autopilot, and flight director operating modes.

Global Positioning System (GPS)
[Option]

Two GPS receivers receive GPS satellite positioning signals. The left and right GPS receivers are independent and each provides an accurate airplane geographical position to the FMC and other aircraft systems. GPS operation is automatic.

GPS Displays

POS REF page 2/3 shows the left and right GPS latitude and longitude position. POS SHIFT page 3/3 shows the left and right GPS position relative to the FMC position. NAV STATUS page 1/2 shows the GPS currently in use by the FMC for position calculation.

[Option – EFIS/MAP]
When the navigation display plan mode is selected and POS SHIFT page 3/3 is displayed, the navigation display shows the left and right GPS symbols. The GPS symbols are identical and show as a single symbol when the GPS receivers calculate the same position.

[Option – PFD/ND]
When the POS (position) switch on the EFIS control panel is selected, the navigation display shows the left and right GPS symbols. The GPS symbols are identical and show as a single symbol when the GPS receivers calculate the same position.

An amber GPS light illuminates to indicate a failure of both GPS sensor units. Failure of a single GPS sensor causes the light to illuminate when either system annunciator panel is pushed.

Copyright © The Boeing Company. See title page for details.

GPS Data

FMC logic selects the position from one of the GPS sensor units as the primary update to the FMC position. When GPS position data is available, radio updating can also occur. If all GPS data becomes unavailable, the FMC position will be determined by radio or inertial (IRS) updating.

GPS navigational information can be manually deselected on the NAV OPTIONS page 2/2. No other controls are provided because the operation of the GPS is completely automatic.

Copyright © The Boeing Company. See title page for details.

DO NOT USE FOR FLIGHT

GPS System Schematic

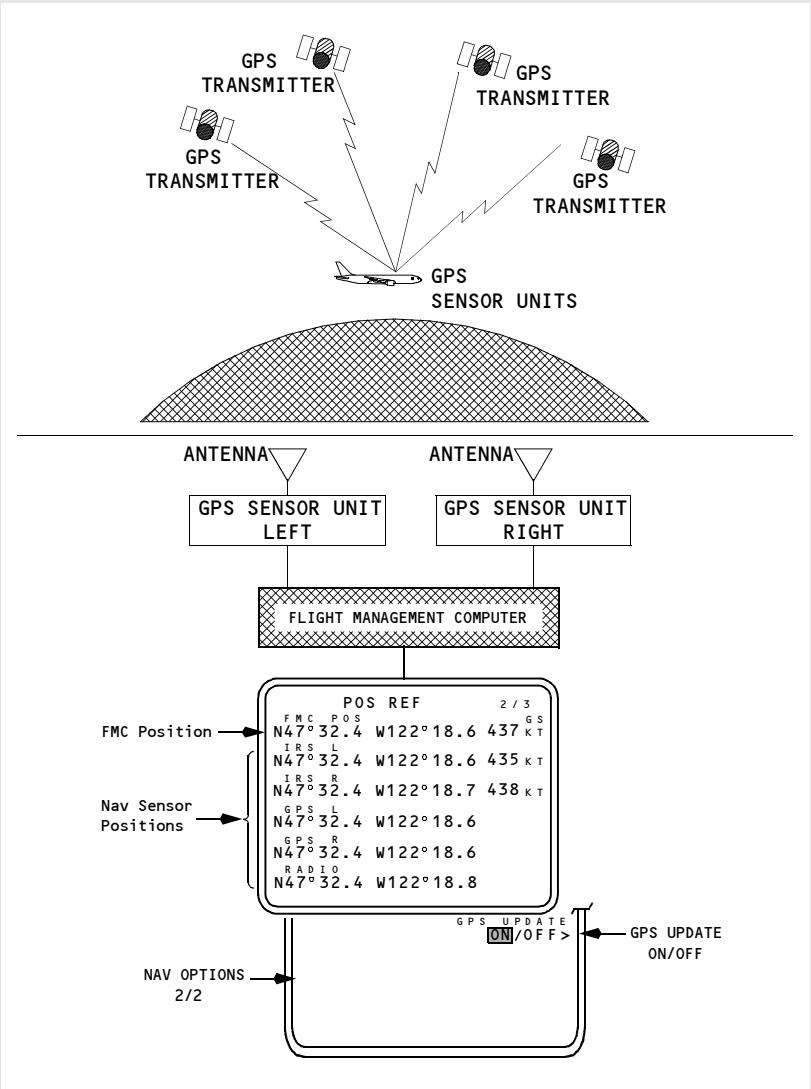

Copyright © The Boeing Company. See title page for details.

Inertial System

The inertial system computes airplane position, ground speed, and attitude data for the DUs, flight management system, autoflight system, and other systems. The major components of the inertial system are the air data inertial reference units (ADIRU), an inertial system display unit (ISDU), IRS mode select unit (MSU), and an IRS transfer switch. For information about the air data part of the system, see chapter 10. The ADIRUs provide inertial position and track data to the FMC, and attitude, altitude, and airspeed data to the CDS. Each ADIRU has an IRS section and an air data section.

Inertial Reference System

Two independent IRSs are installed. Each IRS has three sets of laser gyros and accelerometers. The IRSs are the airplane's sole source of attitude and heading information, except for the standby attitude indicator and standby magnetic compass.

In their normal navigation mode, the IRSs provide attitude, true and magnetic heading, acceleration, vertical speed, ground speed, track, present position, and wind data to appropriate airplane systems. IRS outputs are independent of external navigation aids.

IRS Alignment

An IRS must be aligned and initialized with airplane present position before it can enter the navigation mode. The present position is normally entered through the FMC CDU. If the present position cannot be entered through the FMC CDU, it may be entered through the ISDU keyboard. The airplane must remain stationary during alignment.

Normal alignment between 78 degrees 15 minutes North or South is initiated by rotating the MSU switch from OFF to NAV. The IRS performs a short power test, during which the ON DC light illuminates. When the ON DC light extinguishes and the ALIGN light illuminates, the alignment process begins. Airplane present position should be entered at this time. Alignment time varies from five minutes to seventeen minutes depending on airplane latitude.

Magnetic variation between 82 degrees north and 82 degrees south is stored in each IRS memory. The data corresponding to the present position are combined with the true heading to determine magnetic heading.

If the latitude/longitude position is not within 4 NM of the origin airport, the CDU scratchpad message VERIFY POSITION is displayed. If the entered latitude/longitude position does not pass the IRS internal comparison tests, the scratchpad message ENTER IRS POSITION is displayed.

Copyright © The Boeing Company. See title page for details.

DO NOT USE FOR FLIGHT

The flashing ALIGN light alerts the crew that the position entered does not pass one of the two internal comparison tests and should be checked for accuracy. If the entered position does not agree with the last stored position, the first internal test is failed, and the ALIGN light will flash. If the same position is reentered, the IRS will accept the position and continue the alignment process. A second internal position test compares the entered latitude with the system-computed latitude. If this test is failed, the ALIGN light will again flash. If two consecutive entries of the same position do not pass the second internal position test, the FAULT light will illuminate. If the test is passed, the IRS will proceed to complete the alignment process and enter NAV mode.

During transit or through–flight stops with brief ground times, a thirty second fast realignment and zeroing of ground speed error may be performed by selecting ALIGN while the airplane is parked. Present position should be simultaneously updated by manually entering latitude and longitude prior to selecting NAV.

Note: If the airplane is moved during alignment or fast realignment, the IRS automatically begins the full alignment process.

Loss of Alignment

If an IRS loses both AC and DC power, the alignment is lost. Alignment can be lost if the MSU switch is moved out of the NAV position.

If alignment is lost in–flight, the navigation mode (including present position and ground speed outputs) is inoperative for the remainder of the flight. However, selecting ATT allows the attitude mode to be used to relevel the system and provide an attitude reference. The attitude mode requires approximately thirty seconds of straight and level unaccelerated flight to complete releveling. Some attitude errors may occur during acceleration, but will be slowly removed after acceleration stops.

The attitude mode can also provide heading information, but to establish compass synchronization the crew must manually enter the initial magnetic heading. Drift of up to 15 degrees per hour can occur in the IRS heading. Therefore, when in attitude mode, an operating compass system must be periodically cross–checked and an updated magnetic heading entered in the IRS, as required.

IRS Entries

Manual IRS entries of present position or magnetic heading are normally accomplished on the POS INIT page of the FMC/CDU. The ISDU may also be used.

Copyright © The Boeing Company. See title page for details.

IRS Power

The IRSs can operate on either AC or DC power. The left IRS is normally powered from the AC standby bus, and the right IRS from the AC transfer bus 2. If AC power is not normal, either or both systems automatically switch to backup DC power from the switched hot battery bus. Backup DC power to the right IRS is automatically terminated if AC power is not restored within five minutes.

Initial power–up requires battery bus power available and the IRS mode selector to be in ALIGN, NAV, or ATT. If the IRS is turned off, it must complete a full realignment cycle before the airplane can be moved.

If AC electrical power is subsequently removed from the airplane, the switched hot battery bus continues to supply electrical power to the IRS. The ON DC light illuminates, and the horn in the landing gear wheel well sounds to alert maintenance personnel that the IRS is on battery power.

When the IRS mode selector is turned OFF, the IRS remains powered for approximately 30 seconds. The ALIGN light illuminates until the system is completely shut down.

Inertial System Display Unit (ISDU)

The ISDU is located on the aft overhead panel and displays data according to the position of the display selector and system selector. The ISDU also contains a keyboard for entry of present position and heading.

Mode Select Unit (MSU)

The MSU is located on the aft overhead panel and is used to select the operating mode for each IRS. Indicator lights on the MSU show status of each IRS.

IRS Transfer Switch

Should either IRS fail, the IRS transfer switch is used to switch all associated systems to the functioning IRS.

Copyright © The Boeing Company. See title page for details.

DO NOT USE FOR FLIGHT

IRS Instrument Transfer Switch Schematic

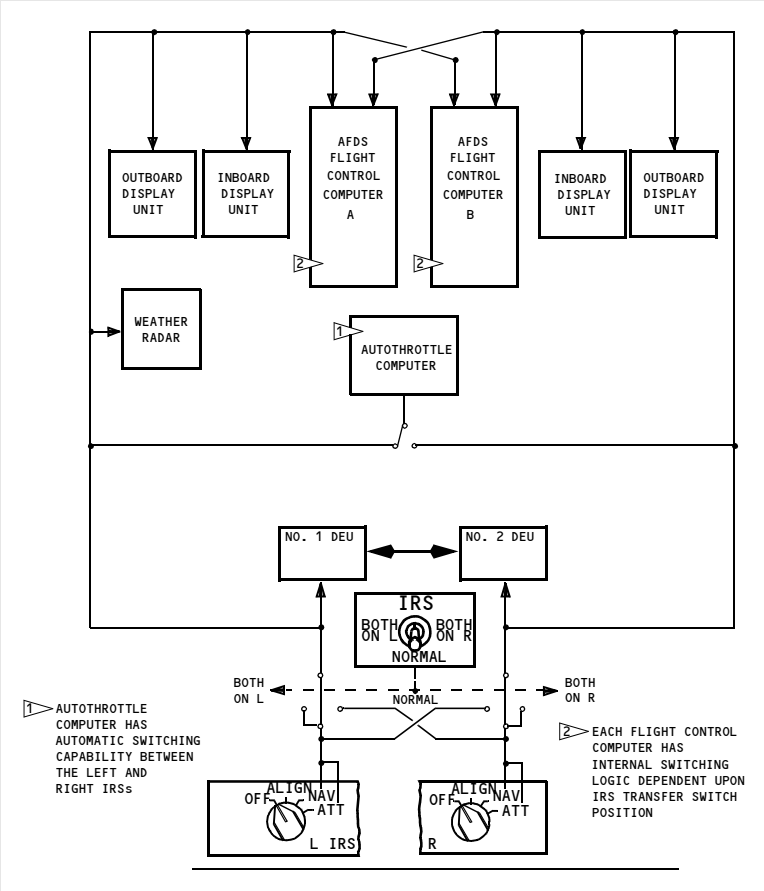

Radio Navigation Systems

Automatic Direction Finding (ADF)

An automatic direction finding (ADF) system enables automatic determination of magnetic and relative bearings to selected facilities.

[Option – With 2 ADF receivers]
Two ADF receivers are installed. The ADF bearing signals are sent to the pointers on the DUs and the standby radio magnetic indicator. The audio is heard by using the ADF receiver control on the audio selector panel.

Copyright © The Boeing Company. See title page for details.

If heading or track information is lost or invalid, ADF bearing pointers on the DUs will be removed, and ADF bearing pointers on the standby radio magnetic indicator will not display correct magnetic bearing. Relative bearings indicated by pointers may be correct if the receiver is operating.

Distance Measuring Equipment (DME)

Two frequency scanning DME systems are installed.

The FMC autotunes DME receivers as necessary for position updating. During normal operations, two different DME signals or a signal from a collocated VOR/DME pair provide an accurate radio geographical position to the FMC. The identifiers of DMEs currently providing update data to the FMC are displayed on the NAV STATUS page 1/2. The radio position is displayed on the POS REF page 2/3. Specific DME station tuning for FMC position updating can be inhibited on the NAV OPTIONS page 2/2.

The flight crew must manually tune the DME on the VHF navigation control panel and the respective EFIS control panel VOR/ADF switch must be in the VOR position for DME to be displayed on the CDS. DME distance is also displayed on the CDS when the ILS receivers are tuned to a collocated DME and localizer facility.

Instrument Landing System (ILS)

Two ILS receivers are installed.

The ILS receivers are tuned manually on the VHF navigation control panel. The flight crew must manually tune the ILS for display on CDS. The ILS localizer and glideslope can also be displayed on the standby attitude indicator.

LOC updating of the FMC occurs only after the ILS is manually tuned.The tuned ILS frequency is displayed on the navigation display in the APP modes.

Navaid Identifier Decoding

[Option – PFD/ND]

The Morse code identifier of a tuned VOR, ILS, or ADF can be converted to alpha characters. The decoded identifier is then shown on the PFD and ND. The crew should monitor this identifier for correct navigation radio reception. The identifier name is not compared with the FMC database.

Due to the large variation in ground station identifier quality, the decode feature may incorrectly convert the intended identifier name. Examples: the Hong Kong localizer “KL” may show as “KAI,” or the Boeing Field ILS may show as “QBFI” or “TTTT” instead of “IBFI.”

Pilots should verify the identity of the tuned navigation station from the audio Morse code when the tuned frequency remains shown or an incorrect identifier is shown.

Copyright © The Boeing Company. See title page for details.

DO NOT USE FOR FLIGHT

Marker Beacon

[Option – EFIS/MAP]
Marker beacon indications for outer, middle, and inner marker are displayed on the upper outboard corner of Captain's and First Officer's outboard display units.

[Option – PFD/ND]
Marker beacon indications for outer, middle and inner marker are displayed on the upper right hand corner of the attitude display located on the Captain's and First Officer's Primary Flight Display (PFD) units.

Very High Frequency Omni Range (VOR)

Two VOR receivers are installed.

The flight crew must manually tune the VOR on the navigation control panel for display on the DUs and the standby radio magnetic indicator. VOR–DME radio updating is available if the crew manually tunes a valid in–range VOR station.

[Option – EFIS/MAP]
Left and right VOR bearings are displayed on the DUs when a valid in–range VOR station is tuned, the respective EFIS control panel VOR/ADF switch is in the VOR position and the respective EFIS control panel POS switch is pushed. The DUs also show course deviation.

[Option – PFD/ND]
Left and right VOR bearings are displayed on the DUs when a valid in–range VOR station is tuned and the respective EFIS control panel VOR/ADF switch is in the VOR position. The DUs also show course deviation.

VHF NAV Transfer Switch

Should either VOR receiver fail, the VHF NAV transfer switch enables selection of the opposite VHF NAV receiver for display.

ATC Transponder

Two ATC transponders are installed and controlled by a single control panel. The ATC transponder system transmits a coded radio signal when interrogated by ATC ground radar. Altitude reporting capability is provided.

Transmissions are automatically enabled when the air/ground system indicates air mode.

TCAS is also controlled from the transponder panel. The TCAS system is described in Chapter 15.

Copyright © The Boeing Company. See title page for details.

Weather Radar

The weather radar system detects and locates various types of precipitation bearing clouds along the flight path of the airplane and gives the pilot a visual indication in color of the clouds' intensity. The radar antenna sweeps a forward arc of 180 degrees.

The radar indicates a cloud's rainfall intensity by displaying colors contrasted against a black background. Areas of heaviest rainfall appear in red, the next level of rainfall in yellow, and the least rainfall in green.

In map mode, the radar displays surfaces in red, yellow, and green (most reflective to least reflective).

These displays enable identification of coastlines, hilly or mountainous regions, cities, or large structures. Ground mapping mode can be useful in areas where ground–based navigation aids are limited.

The radar system performs only the functions of weather detection and ground mapping. It should not be used or relied upon for proximity warning or anticollision protection.

The turbulence mode displays normal precipitation and precipitation associated with turbulence. When the radar detects a horizontal flow of precipitation with velocities of 5 or more meters per second toward or away from the radar antenna, that target display becomes magenta. This magenta area is associated with heavy turbulence. The detection of turbulence is automatically limited to a 40 nautical mile range, regardless of the selected range.

[Option – Weather radar with IDNT]
The IDNT position activates the ground clutter reduction feature. Signals that are determined to have a high probability of originating from ground returns will be automatically removed from the display. Some portions of weather targets may be removed as well. The IDNT position is provided for analysis by the pilot and is not for continuous use.

[Option – With predictive windshear]
The weather radar also provides predictive windshear alerting below 1,200 feet RA. On the ground or in flight below 2,300 feet RA, radar antenna scan sweep is limited to 120 degrees with PWS enabled. Above 2,300 feet RA the radar sweep reverts to 180 degrees. (Refer to Chapter 15, Warnings.)

Copyright © The Boeing Company. See title page for details.

DO NOT USE FOR FLIGHT

Intentionally
Blank

Copyright © The Boeing Company. See title page for details.

Introduction

The flight management system (FMS) aids the flight crew in managing automatic navigation, in–flight performance optimization, fuel monitoring, and flight deck displays. Automatic flight functions manage the airplane lateral flight path (LNAV) and vertical flight path (VNAV). The displays include a map for airplane orientation and command markers (bugs) on the airspeed and N1 indicators to assist in flying efficient profiles.

The flight crew enters the desired route and flight data into the CDUs. The FMS then uses its navigation database, airplane position and supporting system data to calculate commands for manual or automatic flight path control.

The FMS can automatically tune the navigation radios and determine LNAV courses. The FMS navigation database provides the necessary data to fly routes, SIDs, STARs, holding patterns, and procedure turns. Lateral offsets from the programmed route can be calculated and commanded.

For vertical navigation, computations include items such as fuel burn data, optimum speeds, and recommended altitudes. Cruise altitudes and crossing altitude restrictions are used to compute VNAV commands. When operating in the Required Time of Arrival (RTA) mode, the computations include required speeds, takeoff times, and enroute progress information.

Flight Management Computer (FMC)

The basis of the flight management system is the flight management computer. Since the term FMC is universally understood, it is used here for standardization and simplification.

The FMC uses flight crew–entered flight plan information, airplane systems data, and data from the FMC navigation database to calculate airplane present position, and pitch, roll, and thrust commands required to fly an optimum flight profile. The FMC sends these commands to the autothrottle, autopilot, and flight director. Map and route information are sent to DUs. The EFIS control panels are used to select the desired information for the navigation displays. The mode control panel is used to select the autothrottle, autopilot, and flight director operating modes. Refer to the following chapters for operation of these other systems:

- Chapter 4, Automatic Flight
- Chapter 10, Flight Instruments, Displays.

Copyright © The Boeing Company. See title page for details.

DO NOT USE FOR FLIGHT

The FMC and CDU are used for enroute and terminal area navigation and to supplement primary navigation means when conducting other types of nonprecision approaches.

[Option – Dual FMC]
The dual FMC installation is certified as a "sole source" navigation system. Airplanes equipped with two FMCs are certified to operate outside radio navaid coverage. The second FMC serves as a backup, providing complete navigational functions if the other FMC fails.

[Option – Dual FMC]
With a dual FMC installation, one FMC is always designated as primary. This is controlled by the position of the FMC Source Select switch. Refer to Chapter 11, FMC Source Select Switch.

[Option – Dual FMC]
The primary FMC:

- allocates navaid tuning and updating functions between FMCs
- insures synchronization between FMCs
- controls CDU displays
- provides input to the autopilot
- provides input to the autothrottle system

[Option – Dual FMC]
Positioning the FMC Source Select Switch to BOTH ON L or BOTH ON R isolates FMC operation to use only the left or right FMC respectively. In the NORMAL position, the left FMC is primary by default. Although the aircrew can enter information into either CDU, the primary FMC is responsible for synchronizing this information with the secondary FMC and updating both CDU displays.

When external position updating is not available, the FMC uses the IRS position as reference. When the IRS is the only position reference, the FMC applies an automatic correction to the IRS position to determine the most probable FMC position. This correction factor is developed by the FMC's monitoring IRS performance during periods of normal position updating to determine the typical IRS error value. It is important to note that, when external position updating is not available, navigation accuracy may be less than required. Flight crews should closely monitor FMC navigation, especially when approaching the destination. The accuracy of the FMC navigation should be determined during descent phase by using radio navaids and radar information if available.

Note: Inaccurate position updating may cause the airplane to deviate from the desired track.

Copyright © The Boeing Company. See title page for details.

Control Display Units (CDUs)

Two identical, independent CDUs provide the means for the flight crew to communicate with the FMC. The crew may enter data into the FMC using either CDU, although simultaneous entries should be avoided. The same FMC data and computations are available on both CDUs; however, each pilot has control over what is displayed on an individual CDU.

Copyright © The Boeing Company. See title page for details.

DO NOT USE FOR FLIGHT

Intentionally
Blank

Copyright © The Boeing Company. See title page for details.

DO NOT USE FOR FLIGHT

Introduction

When first powered, the FMS is in the preflight phase. As a phase is completed, the FMS automatically transitions to the next phase in this order:

- preflight
- takeoff
- climb
- cruise
- descent
- approach
- flight complete.

Preflight

During preflight, flight plan and load sheet information are entered into the CDU. The flight plan defines the route of flight from the origin to the destination and initializes LNAV. Flight plan and load sheet information provide performance information to initialize VNAV.

Required preflight information consists of:

- initial position
- route of flight
- performance data
- takeoff data.

Optional preflight data includes:

- navigation database
- SID
- STAR
- RTA data
- cruise wind
- reduced takeoff and climb thrust limits.

Each required or optional data item is entered on specific preflight pages.

Preflight begins with the IDENT page. If the IDENT page is not displayed, it can be selected from the IDENT prompt on the INIT/REF INDEX page. Visual prompts provide assistance in selecting the appropriate CDU pages. Preflight pages can be manually selected in any order.

After entering and checking the necessary data on each preflight page, the lower right line select key is pushed to select the next page. When ACTIVATE is selected on the RTE page, the execute light illuminates. The EXEC key is then pushed to complete the task of making the route active before continuing with the preflight.

If a standard instrument departure (SID) is to be entered into the route, the departure/arrival (DEP/ARR) page is selected. After selecting the desired SID, the resulting modification must be appropriately linked to the existing route and executed. This can be accomplished on the RTE or RTE LEGS page.

When all required preflight entries are complete, the preflight status prompts on the TAKEOFF REF page are no longer displayed.

Copyright © The Boeing Company. See title page for details.

DO NOT USE FOR FLIGHT

Takeoff

The takeoff phase begins with selection of TO/GA and extends to the thrust reduction altitude where climb thrust is normally selected.

Climb

The climb phase begins at the thrust reduction altitude and extends to the top of climb (T/C) point. The T/C point is where the airplane reaches the cruise altitude entered on the PERF INIT page.

Cruise

The cruise phase begins at the T/C point and extends to the top of descent (T/D) point. Cruise can include step climbs and en route descents.

Descent

The descent phase begins at the T/D point or when either a level change or vertical speed descent is initiated. The descent phase extends to the beginning of the approach phase.

Approach

The approach phase begins two miles from the first waypoint of a published approach or approach transition selected from the ARRIVALS page.

Flight Complete

After landing, the flight complete phase clears the active flight plan and load data. Some preflight data fields initialize to default values in preparation for the next flight.

FMC and CDU Terminology

The following paragraphs describe FMC and CDU terminology.

Active – flight plan information currently being used to calculate LNAV or VNAV guidance commands.

Activate – designating an entered route as the active route for navigation. It is a two step process:

- push the ACTIVATE prompt
- push the execute (EXEC) key.

Altitude restriction – a crossing restriction at a waypoint.

Delete – remove FMC data and revert to default values, dash or box prompts, or a blank entry using the DELETE key.

Copyright © The Boeing Company. See title page for details.

Econ – a speed schedule calculated to minimize operating cost. The economy speed is based on the flight crew CDU–entered cost index. A low cost index reflects high fuel costs and results in a lower cruise speed.

Enter – placing an entry into the CDU scratchpad and then line selecting the information to the desired location. New characters can be typed, or existing data can be line selected into the scratchpad.

Erase – removing flight crew–entered information, which has resulted in a modification, by pushing the ERASE prompt.

Execute – making modified information part of the active flight plan by pushing the EXEC key.

Inactive – route, climb, cruise, or descent information not currently being used to calculate LNAV or VNAV commands.

Initialize – entering information required to make the system operational.

Message – information the FMC automatically writes in the scratchpad to inform the flight crew of a system condition.

Modify – active data that is changed but not yet executed. When a modification is made to the active route or performance mode, MOD is displayed in the page title, ERASE appears next to line select key 6 left, and the execute key illuminates.

Prompt – CDU displays that aid the flight crew in accomplishing a task. Prompts can be boxes, dashes, or a careted (< or >) line to remind the flight crew to enter or validate information.

Select – pushing a key to obtain the desired information or action, or to copy selected data to the scratchpad.

Speed restriction – an airspeed limit associated with a specified altitude or waypoint.

Waypoint – a point on the route. It can be a fixed point such as a latitude and longitude, VOR or ADF station, airway intersection, or a non–fixed point such as a conditional waypoint. A conditional waypoint is not necessarily associated with a land reference; it reflects a time position, or altitude requirement. An example of a conditional waypoint is “when reaching 1000 feet.”

Copyright © The Boeing Company. See title page for details.

DO NOT USE FOR FLIGHT

Maintenance Index Page

The MAINT BITE INDEX page is available only on the ground and provides access to data for use by maintenance personnel.

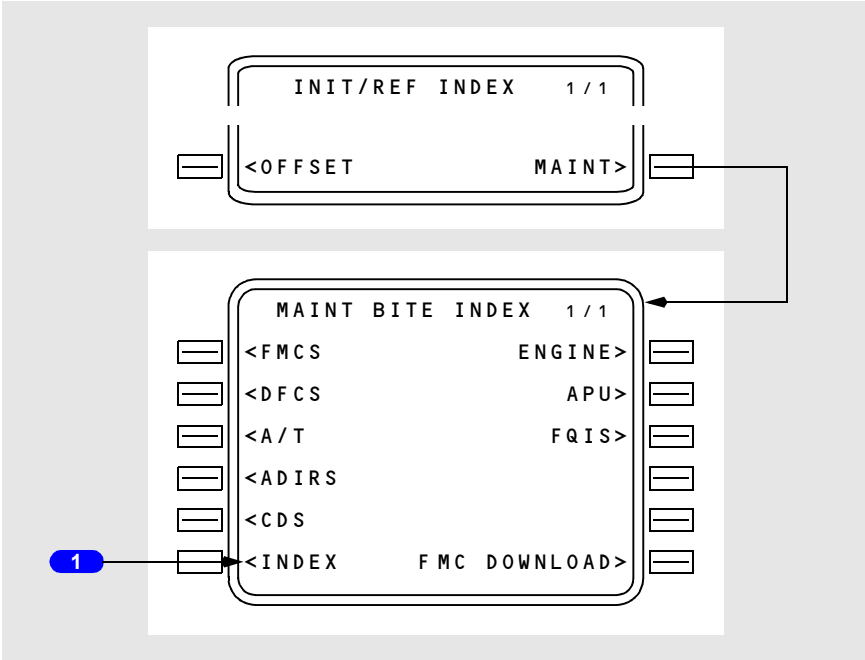

1 INDEX

Displays the INIT/REF INDEX page.

Navigation Position

[Option – With GPS]
The FMC determines present position from the IRS, GPS, and navigation radios. The FMC uses its calculated present position to generate lateral steering commands along the active leg to the active waypoint.

[Option – Dual FMC]
When the FMC Source Select Switch is positioned to NORMAL, the left FMC becomes primary, however, data from both FMCs is combined to determine a composite position and velocity for guidance and map displays.

Copyright © The Boeing Company. See title page for details.

FMC Position Update

[Option – With GPS]
On the ground, the FMC calculates present position based on GPS data. If GPS data is not available, the FMC calculates present position based on IRS data.

[Option – FMC U10.2 and later]
If GPS UPDATE is OFF, the FMC updates position to the takeoff runway threshold when a TO/GA switch is pushed. When making an intersection takeoff, the intersection data must be entered on the TAKEOFF REF page. If GPS UPDATE is ON, the TO/GA update is inhibited. GPS UPDATE is on the NAV OPTIONS page.

[Option – Runway position update via the CDU only]
On the ground prior to takeoff, FMC position update to the takeoff runway threshold position can be done on the TAKEOFF REF page.

[Option – With GPS]
In flight, the FMC position is continually updated from the GPS, navigation radios, and IRS. Updating priority is based on the availability of valid data from the supporting systems.

FMC position updates from navigation sensor positions are used in the following priority order:

- GPS
- two or more DME stations
- one VOR with a collocated DME
- one localizer and collocated DME
- one localizer.

The station identifiers and frequencies of the selected radio navigation aids are displayed on the NAV STATUS page 1/2.

FMC logic selects the GPS position as the primary update to the FMC position. If all GPS data becomes unavailable, the FMC reverts to radio or IRS updating.

The dual frequency–scanning DME radios are automatically tuned by the FMC. The stations to be tuned are selected based upon the best available signals (in terms of geometry and strength) for updating the FMC position, unless a specific station is required by the flight plan. Radio position is determined by the intersection of two DME arcs.

Copyright © The Boeing Company. See title page for details.

DO NOT USE FOR FLIGHT

If the DME radios fail, or if suitable DME stations are not available, FMC navigation is based on IRS position information only. The two VHF Nav radios are used by the FMC for localizer updating during an ILS approach and by the crew for navigation monitoring.

Note: The FMC is designed to automatically reject unreliable navaid data during FMC position updating. However, in certain conditions, navaids which are in error may satisfy the reasonableness criteria and provide the FMC with an inaccurate radio position. One of the most vulnerable times is when a radio position update occurs just after takeoff. This is usually manifested in an abrupt heading correction after engaging LNAV. The position shift can be seen on the map which will shift the desired track and runway symbol to a position significantly different from that displayed during ground roll.

[Option – FMC U10.3 and later]
Note: If the flight crew observes either of these indications, the FMC should be carefully monitored.

When adequate radio updating is not available, navigation display map mode may display a shift error. This error results in the displayed position of the airplane, route, waypoints, and navigation aids shifted from their actual positions.

An across track, undetected map shift may result in the airplane flying a ground track that is offset from the desired track. An along track, undetected map shift may result in the flight crew initiating altitude changes earlier or later than desired. In either case, an undetected map shift may compromise terrain or traffic separation.

Map shift errors can be detected by comparing the position of the airplane on the navigation display map mode with data from the ILS, VOR, DME, and ADF systems.

Navigation Performance

The FMC uses data from the navigation systems to accurately calculate the position of the airplane. The current FMC position is shown on line 1 of the POS REF page 2/3.

[Option – With GPS]
The FMC position is derived from a mathematical combination of the positions determined by the IRS, radio, and GPS systems. It represents the FMC's estimate of the actual position of the airplane. Its accuracy varies according to the accuracy of the other position determining systems.

[Option – FMC U10.4 and later]
Note: If the GPS position update is excessive, GPS updating is suspended until the GPS position can be determined to be reasonable.

Copyright © The Boeing Company. See title page for details.

Actual Navigation Performance (ANP)

Actual navigation performance (ANP) is the FMC's estimate of the quality of its position determination. It is shown on POS SHIFT page 3/3 and on RTE LEGS pages. ANP represents the estimated maximum position error with 95% probability. That is, the FMC is 95% certain that the airplane's actual position lies within a circle with a radius of the ANP value around the FMC position. The lower the ANP value, the more confident the FMC is of its position estimate.

Required Navigation Performance (RNP)

The FMC supplies a default required navigation performance (RNP) value for takeoff, en route, oceanic, terminal, and approach phases of flight. RNP can also be supplied by the Navigation Database or may be entered by the crew. Actual navigation performance should not exceed RNP.

[Option – FMC U10.3, U10.4 or U10.4A]
If ANP exceeds the RNP value, the UNABLE REQD NAV PERF–RNP message appears. RNP is shown on POS SHIFT page 3/3 and on RTE LEGS pages.

[Option – FMC U10.5 and later]
If ANP exceeds the RNP value, an amber UNABLE REQD NAV PERF–RNP message appears on the map display. RNP is shown on RNP PROGRESS page 4/4 and on RTE LEGS pages.

Copyright © The Boeing Company. See title page for details.

DO NOT USE FOR FLIGHT

Actual Navigation Performance

[Option – Single FMC with GPS]

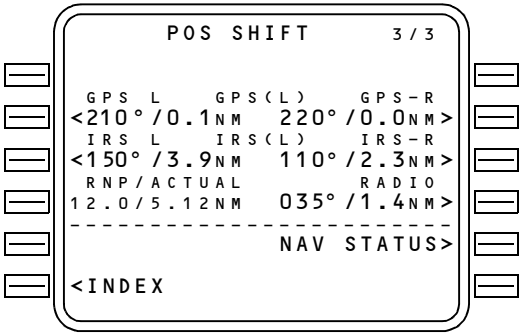

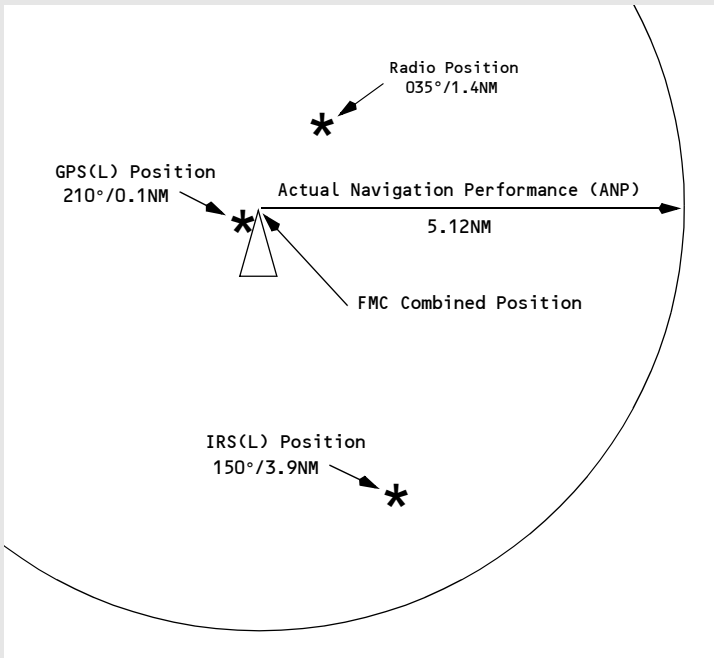

Copyright © The Boeing Company. See title page for details.

[Option – Dual FMC with GPS]

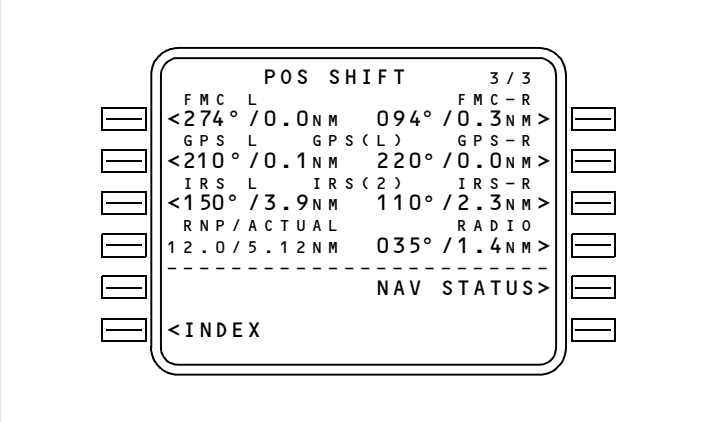

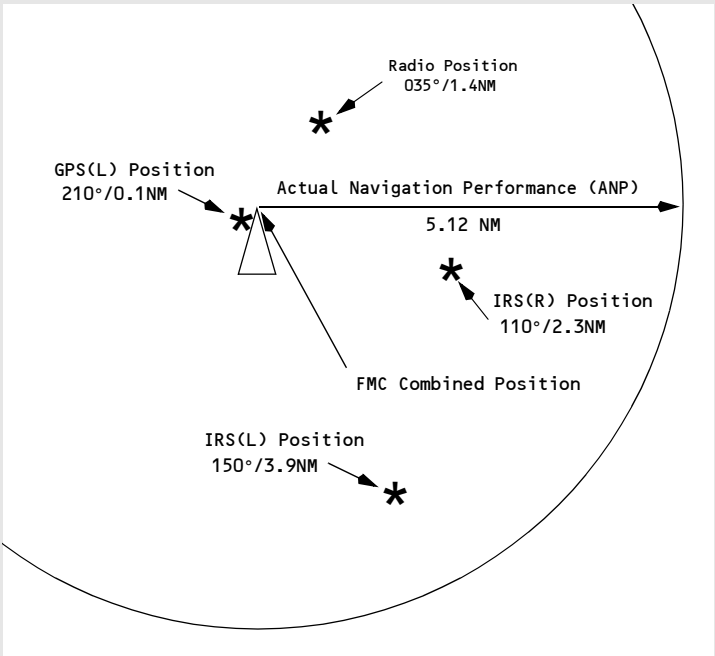

Copyright © The Boeing Company. See title page for details.

DO NOT USE FOR FLIGHT

Lateral Navigation (LNAV)

LNAV provides steering commands to the next waypoint. If selected, LNAV engages when laterally within 3 nautical miles of the active route leg. If outside of 3 nautical miles of the active route leg, LNAV engages if on an intercept heading of 90 degrees or less and the intercept will occur before the active waypoint. FMC LNAV guidance normally provides great circle courses between waypoints. However, when an arrival or approach from the FMC database is entered into the active route, the FMC can supply commands to fly a constant heading, track, or follow an arc, as required by the procedure.

Waypoints

Waypoint (navigation fix) identifiers are displayed on the CDU and navigation display.

The CDU message NOT IN DATA BASE is displayed if a manually entered waypoint identifier is not stored in the database. The waypoint can still be entered as a latitude/longitude, place–bearing/distance or place–bearing/place–bearing waypoint.

FMC–generated waypoints contain a maximum of five characters assigned according to the following rules.

Navaid Waypoint Names

VHF – waypoints located at VHF navaids (VOR/DME/LOC) are identified by the official one, two, three or four character facility identifier. Examples:

- Los Angeles VORTAC – LAX
- Tyndall TACAN – PAM
- Riga, Latvia – RIX.

NDB – waypoints located at NDBs are identified by use of the station identifier. Example:

- Fort Nelson, CAN – YE.

Fix Waypoint Names

Fixes with one–word names – waypoints located at fixes with names containing five or fewer characters are identified by the name. Examples:

- DOT
- ACRA
- ALPHA.

Copyright © The Boeing Company. See title page for details.

Long Waypoint Names

Names with more than five characters are abbreviated using the following rules sequentially until five characters remain. Double letters are deleted. Examples:

- KIMMEL becomes KIMEL
- COTTON becomes COTON
- RABBITT becomes RABIT.

Keep the first letter, first vowel and last letter. Delete other vowels starting from right to left. Examples:

- ADOLPH becomes ADLPH
- BAILEY becomes BAILY
- BURWELL becomes BURWL.

Keep the last letter, then delete consonants from right to left. Examples:

- ANDREWS becomes ANDRS
- BRIDGEPORT becomes BRIDT
- HORSBA becomes HORSA.

Fixes with multiword names use the first letter of the first word and abbreviate the last word, using the above rules sequentially until a total of five characters remain. Examples:

- CLEAR LAKE becomes CLAKE
- ROUGH ROAD becomes RROAD.

Unnamed Point Waypoint Names

Unnamed turn points, intersections and DME fixes – if an unnamed turn point, intersection or fix is collocated with a named waypoint or navaid on a different route structure (such as low altitude routes or an approach), the name or identifier of the collocated waypoint is used. Example:

- Unnamed turn point on J2 between the Lake Charles (LCH) and New Orleans (MSY) VORTACs is coincidental with the Lafayette (LFT) low altitude VORTAC. LFT is used as the identifier for the turn point.

Identifier codes for unnamed turn points not coincidental with named waypoints are constructed from the identifier of a navaid serving the point and the distance from the navaid to the point. If the distance is 99 nautical miles or less, the navaid identifier is placed first, followed by the distance. If the distance is 100 nautical miles or more, the last two digits are used and placed ahead of the navaid identifier. Examples (NAVAID – DISTANCE – IDENT):

- INW – 18 – INW18
- CSN – 106 – 06CSN
- TCS – 89 – TCS89.

Copyright © The Boeing Company. See title page for details.

DO NOT USE FOR FLIGHT

Unnamed flight information region (FIR), upper flight information region (UIR), and controlled airspace reporting points – waypoints located at unnamed FIR, UIR, and controlled airspace reporting points are identified by the three–letter airspace type identification followed by a two–digit sequence number.

Unnamed oceanic control area reporting points – positions in the northern hemisphere use the letters N and E, while positions in the southern hemisphere use the letters S and W. Latitude always precedes longitude. For longitude, only the last two digits of the three digit value are used.

Placement of the designator in the five character set indicates whether the first longitude digit is 0 or 1. The letter is the last character if the longitude is less than 100° and is the third character if the longitude is 100° or greater.

N is used for north latitude, west longitude. E is used for north latitude, east longitude. S is used for south latitude, east longitude. W is used for south latitude, west longitude. Examples:

- N50° W040° becomes 5040N
- N75° W170° becomes 75N70
- N50° E020° becomes 5020E
- N06° E110° becomes 06E10
- S52° W075° becomes 5275W
- S07° W120° becomes 07W20
- S50° E020° becomes 5020S
- S06° E110° becomes 06S10.

Procedure Arc Fix Waypoint Names

Unnamed terminal area fixes along a DME arc procedure – unnamed fixes along a DME arc procedure are identified with the first character D. Characters 2 through 4 indicate the radial on which the fix lies. The last character indicates the arc radius. The radius is expressed by a letter of the alphabet where A = 1 mile, B = 2 miles, C = 3 miles, and so forth. Examples:

- EPH252°/24 = D252X
- EPH145°/24 = D145X
- GEG006°/20 = D006T.

An unnamed waypoint along a DME arc with a radius greater than 26 miles is identified as an unnamed turn point that is not coincidental with a named waypoint. Examples:

- CPR338°/29 = CPR29
- GEG079°/30 = GEG30.

When there are multiple unnamed waypoints along a DME arc with a radius greater than 26 miles, the station identifier is reduced to two characters, followed by the radius, and then a sequence character. Examples:

- CPR134°/29 = CP29A
- CPR190° /29 = CP29B
- CPR201°/29 = CP29C.

Copyright © The Boeing Company. See title page for details.

Procedure Fix Waypoint Names

Marker beacons – a marker beacon is identified by the marker type identifier followed by the runway number. Examples:

- Outer Marker 13R = OM13R
- Middle Marker 21 = MM21.

Runway–related fixes – waypoints located at unnamed runway–related fixes are identified by adding a two–letter prefix to the runway number. The following list is used to determine the appropriate prefix:

- RX – runway extension fix
- FA – VFR final approach fix
- CF – final approach course fix
- FF – final approach fix
- IF – initial approach fix
- OM – outer marker
- MM – middle marker
- IM – inner marker
- BM – back course marker
- MD – minimum descent altitude
- A – (+ an alpha) step down fix
- RW – runway threshold
- MA – missed approach point other than RW
- TD – touchdown point inboard of RW.

Examples: OM25L, MM09, IM23, RW04, RW18L.

For airports with more than one approach to the same runway, the two letter prefix may change to allow different identifiers for the same waypoint. The first letter identifies the type of fix and the second letter identifies the type approach as follows:

- C( ) – final approach course fix
- F( ) – final approach fix
- P( ) – missed approach point
- I( ) – initial approach fix
- D( ) – minimum descent altitude
- T( ) – touch down point
- R( ) – runway centerline intercept.
- ( )I – ILS
- ( )L – localizer only( )B –backcourse ILS
- ( )D – VOR/DME
- ( )V – VOR only
- ( )S – VOR with DME points
- ( )N – NDB
- ( )Q – NDB with DME points
- ( )M – MLS
- ( )T – Tacan
- ( )R – RNAV.

Examples: CI32R, PV15, FN24L.

Unnamed turn points – unnamed turn points that are part of a procedure are identified as a latitude and longitude waypoint. These include waypoints (except conditional waypoints) defined by flying a course or track from a waypoint (except conditional waypoints) to a radial or DME distance. These waypoints are automatically entered in a route by selection of a procedure using these waypoints, from the departures or arrivals page.

Copyright © The Boeing Company. See title page for details.

DO NOT USE FOR FLIGHT

Airport reference points – airport reference points are identified by the ICAO identifier.

Duplicate Waypoint Names

Duplicate identifiers – should application of these rules result in more than one waypoint having the same identifier, then a CDU page change occurs when an attempt is made to enter the duplicated identifier. The page title is SELECT DESIRED WPT. The page lists the latitude and longitude of waypoints with the same identifier and the type of facility or waypoint. Selecting the latitude/longitude of the desired waypoint enters the correct waypoint on the original page.

Conditional Waypoint Names

Conditional waypoints are automatically entered into a route as a result of selecting a procedure on a DEPARTURES or ARRIVALS page. Normally, conditional waypoints cannot be manually entered on a route or legs page. These waypoints are events when a condition occurs and are not at a geographically–fixed position. The types of conditions are:

- passing through an altitude
- flying a heading to a radial or DME distance
- intercepting a course
- heading vector to a course or fix.

Altitude and course intercept conditional waypoints are displayed on the CDU inside (parentheses) marks. The following diagram depicts conditional waypoints.

Copyright © The Boeing Company. See title page for details.

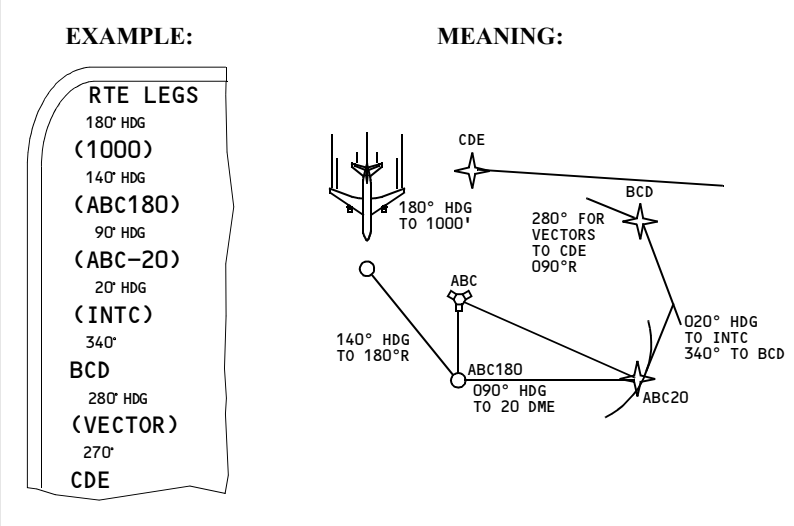

Note: All waypoints except BCD and CDE are examples of conditional waypoints.

Note: When (VECTOR) is the active leg and LNAV is not engaged, the FMC automatically sequence to the next waypoint when within 3 nm of the next leg. If (VECTOR) is the active waypoint and LNAV is engaged, the FMC does not automatically sequence to the next waypoint. The next waypoint becomes active only upon EXECution of the procedures for Proceeding Direct To a Waypoint or Intercepting a Leg to a Waypoint.

Manually Entered Latitude/ Longitude Waypoint Names

Pilot defined waypoints entered as a latitude and longitude are displayed in a five–character format. The first three characters are WPT followed by a two digit sequence number. Latitude and longitude waypoints are entered with no space or slash between the latitude and longitude entries. Leading zeroes must be entered. All digits and decimal points (to 1/10 minute) must be entered unless the latitude or longitude are full degrees. Examples:

- N47° W008° is entered as N47W008 and displayed as WPT01
- N47° 15.4’ W008° 3.4’ is entered as N4715.4W00803.4 and displayed as WPT02.

Copyright © The Boeing Company. See title page for details.

DO NOT USE FOR FLIGHT

Manually Entered Place–Bearing/Distance or Place–Bearing/Place–Bearing Waypoint Names

Waypoints entered as a place–bearing/distance or place–bearing/place–bearing are identified by the first three characters of the entry followed by a two–digit sequence number. Examples:

- SEA330/10 becomes SEA01
- SEA330/OLM020 becomes SEA02.

Manually Entered Along–Track Waypoint Names

Along–track waypoints are a special case of place–bearing/distance waypoints applied to the current route. When a waypoint is desired on the route where none exists, the along–track waypoint feature creates the desired waypoint without creating a route discontinuity.

Along–track waypoints are entered using the waypoint name (the place), followed by a slash and minus sign, for points before the waypoint, or no sign for points after the waypoint, followed by the mileage offset for the newly defined waypoint. The route course takes the place of the bearing which is not entered. The created waypoint is then inserted over the original waypoint. The distance offset must be less than the distance between the originating waypoint and next (positive value) or preceding (negative value) waypoint. Latitude and longitude waypoints cannot be used to create along–track waypoints. Examples:

- VAMPS/25 is 25 miles after VAMPS on the present route, and is displayed as VAM01
- ELN/–30 is 30 miles before ELN on the present route, and is displayed as ELN01.

Navigation Displays

The route is displayed on the navigation display in the map, map center, and plan modes. The display color and format represent the following status:

- an inactive route is displayed as a cyan dashed line
- an activated but not yet executed route is displayed as a cyan dashed line
- the active route is displayed in magenta
- modifications to an active route are displayed as dashed white lines
- modified waypoints are displayed in white
- executed route offsets are displayed as a dashed magenta line.

Vertical Navigation (VNAV)

VNAV provides vertical profile guidance through the climb, cruise, and descent phases of flight.

Copyright © The Boeing Company. See title page for details.

Speed/Altitude Restrictions

VNAV controls the path and speed to comply with waypoint crossing restrictions. Waypoint crossing restrictions are entered on the LEGS page waypoint line by pushing the applicable key on the right side of the CDU. Barometric altitude restrictions must be below the cruise altitude to be valid. Values entered as part of a procedure and manually entered restrictions are shown in large font. FMC predicted values do not act as restrictions, and are shown in small font.

[Option – With color]
A waypoint restriction is magenta when it is active. The restriction does not have to be in line 1 to be active.

[Option – With color]
Modified waypoint restrictions are shaded white until they are executed. Speed restriction entries require an altitude restriction at the same waypoint.

Waypoints can have altitude, airspeed or both airspeed/altitude restrictions.

All speed restrictions are considered by the FMC as at or below restrictions.

At or above altitude restrictions are entered with a suffix letter A (example: 220A). At or below altitude restrictions are entered with a suffix letter B (example: 240B). Mandatory altitude restrictions are entered without any suffix letter (example: 270).

Altitude restrictions that are between two altitudes are displayed with the lower limit first, followed by a suffix letter A, then the upper limit, followed by a suffix letter B (example: 220A240B).

Copyright © The Boeing Company. See title page for details.

DO NOT USE FOR FLIGHT

Takeoff and Climb

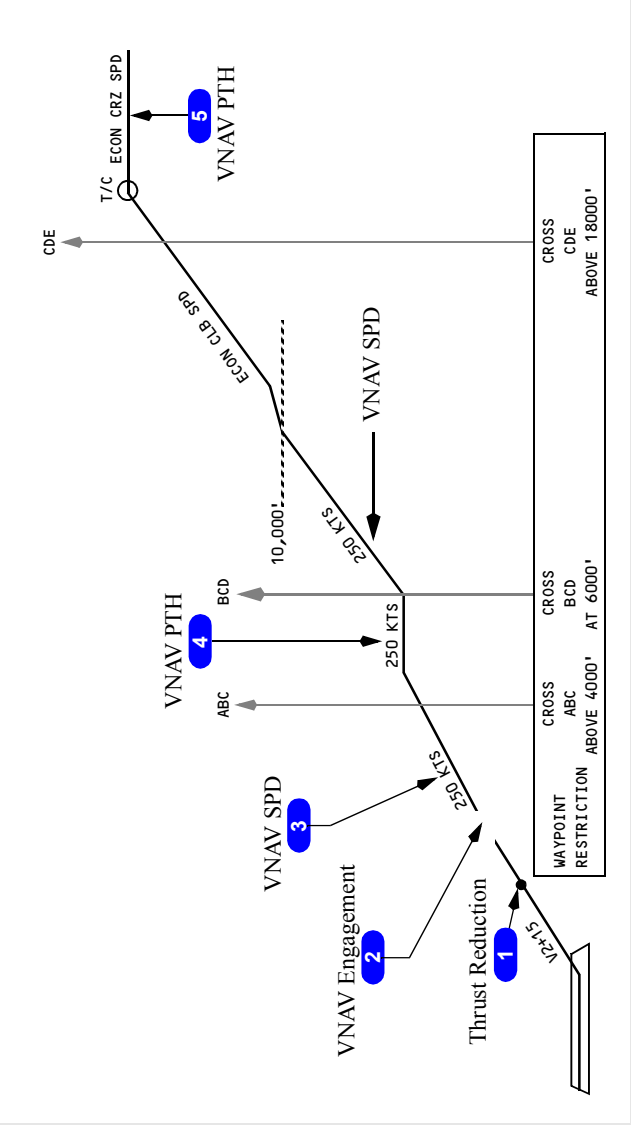

Copyright © The Boeing Company. See title page for details.

1 Thrust Reduction

Climb thrust is selected by pushing the N1 switch.

[Option – With automatic thrust reduction after takeoff]
Climb thrust is selected by pushing the N1 switch or automatically upon reaching the thrust reduction altitude.

[Option – With quiet climb]
When cutback mode is selected ON, the FMC calculates and commands a thrust cutback at the required cutback altitude. A new N1 is calculated during climb and normal climb thrust is restored at the RESTORE altitude.

2 VNAV Engagement

VNAV commands an airspeed increase to the planned climb speed profile, limited by configuration.

3 VNAV Climb

The VNAV climb profile uses VNAV SPD at the default climb speed or pilot selected climb speed to remain within all airspeed and altitude restrictions that are part of the SID entered into the active route. Autothrottle uses selected climb thrust limit.

Note: Selection of ENG OUT on the CLB page provides the crew with advisory engine out performance information.

If the climb speed profile cannot achieve an altitude restriction, the UNABLE NEXT ALTITUDE scratchpad message is shown.

4 Climb Restrictions

VNAV enters the VNAV PTH mode to remain within departure or waypoint restrictions. Speed maintained during this time can be:

- procedure based speed restriction
- waypoint speed restriction
- default VNAV climb speed
- manually entered climb speed.

5 Top Of Climb (T/C)

The point where the climb phase meets the cruise altitude is called the top of climb. Approaching this point, the FMC changes from the climb phase to the cruise phase. The T/C is shown any time the FMC calculates a change from a climb phase to a cruise phase, such as a step climb.

The T/C point is shown on the map as a green open circle with the label T/C.

Copyright © The Boeing Company. See title page for details.

DO NOT USE FOR FLIGHT

MCP Altitude Intervention
[Option]

[Option – With VNAV ALT]
The altitude intervention switch may be used to resume climb after a temporary level off.

[Option – With VNAV ALT]

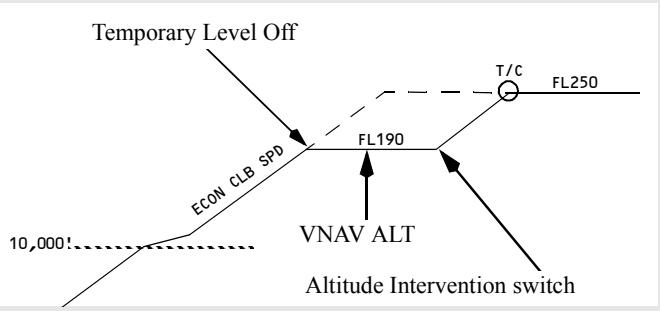

[Option – With VNAV ALT]
Whenever the airplane levels off at an MCP altitude that is not in the FMC, VNAV ALT engages. In the illustration above, FMC cruise altitude is FL250 and the clearance altitude, FL190, is set in the MCP. Pitch maintains altitude and thrust maintains FMC target speed. In the illustration above, the speed after the temporary level off would be ECON CLB SPEED.

[Option – With VNAV ALT]
To resume the climb, put the clearance altitude into the MCP altitude window and push the altitude intervention switch. VNAV SPD engages. Pitch maintains FMC speed and thrust increases to the climb limit. In the example, the airplane climbs to FMC CRZ ALT and then levels off in cruise.

The altitude intervention switch may be used during climb or descent to delete altitude restrictions between the current altitude and the MCP altitude. When level at a restriction altitude, and cleared to a higher altitude prior to crossing the restriction waypoint, reset the MCP altitude to the new clearance altitude and push the altitude intervention switch.

Copyright © The Boeing Company. See title page for details.

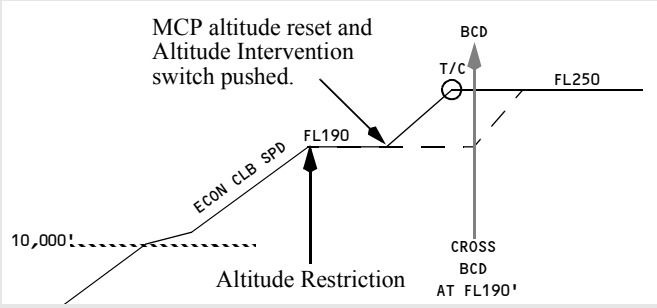

In the illustration above, the current altitude restriction is deleted and the airplane continues VNAV climb to the cruise altitude. T/C moves to match the new climb profile.

The altitude intervention switch may be used to increase cruise altitude. When level at a cruise altitude, and then cleared to a higher cruise altitude, reset the MCP altitude to the new cruise altitude and push the altitude intervention switch.

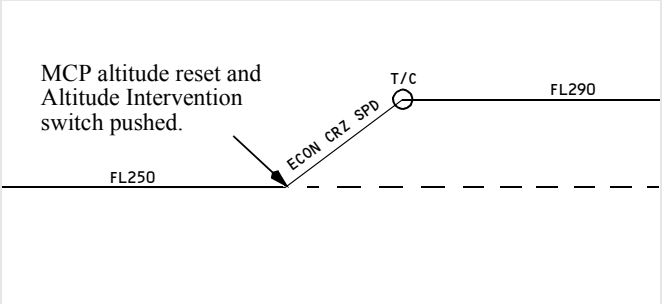

In the illustration above, the cruise altitude is increased and the airplane enters a VNAV cruise climb at the economy cruise speed.

Altitude intervention cannot be used to decrease cruise altitude. Setting a lower altitude then pushing the altitude intervention switch causes the FMC to enter an early descent in the selected descent mode.

Cruise

At cruise altitude, the FMC sets cruise speed at the default or pilot entered speed until reaching the top–of–descent (T/D) point. Alternate cruise speed options are:

- long range (LRC)
- flight crew entered speed.

Copyright © The Boeing Company. See title page for details.

DO NOT USE FOR FLIGHT

Cruise thrust is set as required to maintain level flight at the target speed, with the autothrottle engaged. The FMC uses maximum range cruise speed if cost index is set to zero.

Fuel and ETA predictions are based on a constant altitude cruise unless a step climb altitude is entered.

Step Climb

If a step climb altitude is entered in the CRZ page STEP altitude, the FMC calculates the point where the step climb should begin.

The distance and ETA to the next step point are shown on the CRZ and PROGRESS pages. The next step point is shown on the map as a green open circle with the label S/C.

MCP Speed Intervention
[Option]

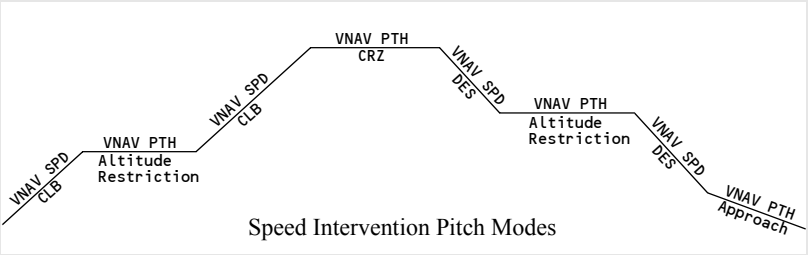

Speed Intervention Pitch Modes

The above illustration shows VNAV mode for each phase of flight during speed intervention.

With VNAV engaged, pushing the speed intervention switch enables speed intervention. Speed intervention allows the flight crew to change airplane speed with the IAS/MACH selector.

In a path descent, VNAV PTH changes to VNAV SPD during speed intervention. In all other phases, the pitch mode remains the same. In VNAV PTH mode, thrust controls speed; in VNAV SPD mode, pitch controls speed.

In approach phase during speed intervention, the pitch mode remains in VNAV PTH after speed intervention is exited. The FMC shall remain in the current vertical mode regardless of IAS MACH selector changes.

[Option – FMC U10.4 and later]
When speed intervention is exited the descent mode will switch back to path mode.

Copyright © The Boeing Company. See title page for details.

Descent

VNAV can perform a descent in either of two modes – path descent or speed descent. During a path descent, the FMC uses idle thrust and pitch control to maintain a vertical path, similar to a glideslope in three dimensions. During a speed descent, the FMC uses idle thrust and pitch control to maintain a target descent speed, similar to a level change descent.

Top Of Descent (T/D)

The point where the cruise phase changes to the descent phase is the top of descent. The T/D point is shown on the map as a green open circle with the label T/D. T/D is calculated from an end of descent (E/D) point.

Intermediate T/D points show on the map as green open circles with the label T/D–XXXXX (altitude). Intermediate T/D points exist when path segments between altitude restricted waypoints produce a level path segment. The intermediate T/D point shows where the descent will resume.

End of Descent (E/D)

The FMC calculates a descent path based on airspeed restrictions, altitude restrictions and the end of descent (E/D) point. The E/D point is shown on the map as a green open circle with the label E/D. The E/D is the last of the following which is not preceded by a lateral discontinuity:

- the runway threshold for approaches with a runway waypoint on the RTE LEGS page, or
- the missed approach point for approaches not showing a runway waypoint on the RTE LEGS page, or
- the lowest “at” altitude restriction if no arrival procedure is entered.

Entering an instrument arrival procedure provides an E/D point.

If there is no E/D point, FMC predictions assume a computed profile to 1000 feet above the destination field elevation, at a position which will vary according to selection of arrival procedures. The FMC will provide a slowdown profile for approach. VNAV path descent is not available if there is no E/D point.

VNAV Descent and Approach Path

The descent path starts at the calculated top of descent (T/D) point and includes waypoint altitude restrictions. The path is based on:

- idle thrust
- speedbrakes retracted
- descent wind speed decreasing with decreasing altitude
- applicable target speed.

After the first “at” or “at or below” restriction, the path angle is level until intercepting the idle thrust descent path to the next altitude constrained waypoint.

Copyright © The Boeing Company. See title page for details.

DO NOT USE FOR FLIGHT

[Option – FMC U10.2 and later]

Note: When passing top of descent following high speed cruise operation (within approximately 6 knots of Vmo/Mmo, cost index of 100 or higher), VNAV may revert to LVL CHG to prevent overspeed. Reduce airspeed to the VNAV target descent speed prior to reengaging VNAV.

[Option – With geometric descent path]

After the first "at" or "at or below" restriction, the path angle is constant between waypoints.

Normally, the target speed is economy speed above the airspeed restriction altitude and 240 knots below that altitude, until deceleration for approach. VNAV will not permit descent below the airspeed restriction altitude until the airspeed is at or below the restricted value plus ten knots. The start and end of the airport speed restriction deceleration segment is shown on the map as a green open circles with no labels.

The descent path assumes deceleration to reach the final approach fix (FAF), or the glideslope intercept point at VREF 40+20 knots.

Target speeds are changed by entries on the LEGS or DESCENT pages. Wind and thrust assumptions are changed on the DES FORECASTS page.

Deceleration points show on the map as green open circles with the label DECEL. Deceleration points show prior to:

- airspeed constrained waypoints
- holding patterns
- approach flap extension.

If more than one deceleration segment exists in the flight plan, only the next deceleration point shows. Deceleration points can also show prior to cruise holding patterns or other speed reductions.

[Option – With VNAV ALT]

During descent, VNAV ALT engages if the airplane levels at an MCP altitude not in the FMC.

VNAV Path Descent

An E/D point must be defined in order to accomplish a path descent. It may be defined manually or by the selection of an arrival procedure.

The FMC defaults to the path descent mode for planning purposes. If the necessary information for a path descent is not available by the time the airplane reaches the T/D point, the FMC will revert to the speed descent mode.

The path descent normally begins automatically at the calculated T/D point, provided the MCP altitude is reset for the descent. If descent is not initiated by the T/D, a path descent may not be available. At the T/D, the FMC commands idle thrust and pitch to follow the descent path.

Copyright © The Boeing Company. See title page for details.

The descent complies with waypoint altitude restrictions by following the calculated vertical path.

Note: A path descent uses the target speed for planning purposes only. There is no attempt to maintain the target speed.

A path descent will automatically revert to a speed descent, or VNAV will disengage, if all required parameters are not maintained during descent.

Note: When descending in VNAV PTH, the FCC will disengage VNAV and switch to LVL CHG if actual speed becomes equal to or slightly less than the minimum speed, denoted by the underspeed limiting symbol in the MCP IAS/Mach window. This can also happen in turbulence or gusty conditions when the minimum speed may momentarily increase due to G loading. See section 4.20, Minimum Speed Reversion.

The FMC uses a special program called “Energy Compensation” at certain times during an ACT PATH DES. This program goes into effect when the MCP has been temporarily set to an altitude above the planned descent path. The airspeed cursor will slowly move toward a slower airspeed while the “TARGET” speed on the FMC remains constant. The airspeed reduction improves the capability of recapturing the planned descent path. When the airplane is cleared to resume the descent, the airspeed will slowly build up to the FMC target speed as the airplane recaptures the planned descent path.

The CDU message DRAG REQUIRED is displayed if an unexpected tailwind results in a significant increase in airspeed to maintain path. The CDU message DES PATH UNACHIEVEABLE is displayed if the FMC determines that the planned descent profile cannot be accomplished. VNAV disengages if a limit speed will be exceeded.

[Option – FMC U10.3]
A path descent must be initiated while within the allowable cross–track error for LNAV, however LNAV may be disengaged during descent while remaining in the path mode. To maintain a path descent under these conditions, the airplane must remain within a distance equal to twice the RNP from the LNAV course. If this distance is exceeded, VNAV will change to speed descent if no vertical angle is specified for the current leg. VNAV will disengage if there is a vertical angle specified and LNAV is not engaged.

[Option – FMC U10.4 and later]
A path descent must be initiated while within the allowable cross–track error for LNAV, however LNAV may be disengaged during descent while remaining in the path mode. To maintain a path descent under these conditions, the airplane must remain within a distance equal to twice the RNP from the LNAV course. VNAV will remain in path regardless of cross–track.

Copyright © The Boeing Company. See title page for details.

DO NOT USE FOR FLIGHT

VNAV Cruise and Path Descent Profile (Nonprecision Approach)

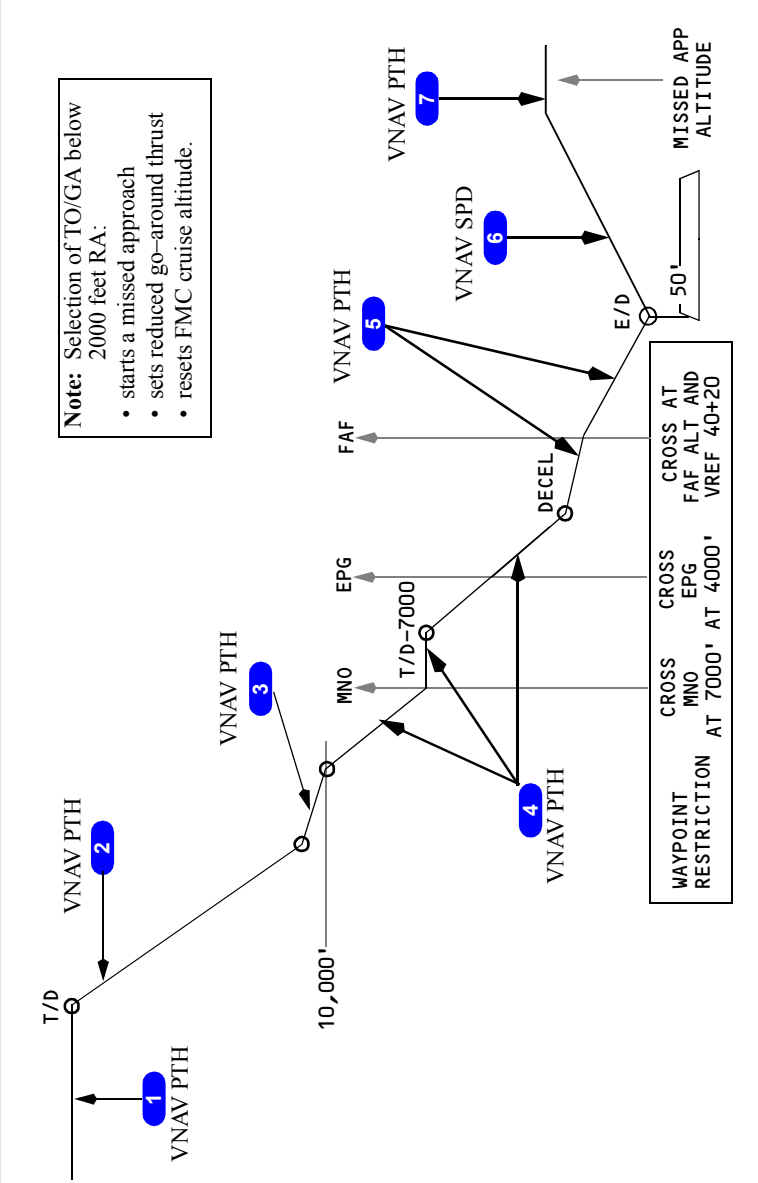

Copyright © The Boeing Company. See title page for details.

[Option – With geometric descent path]

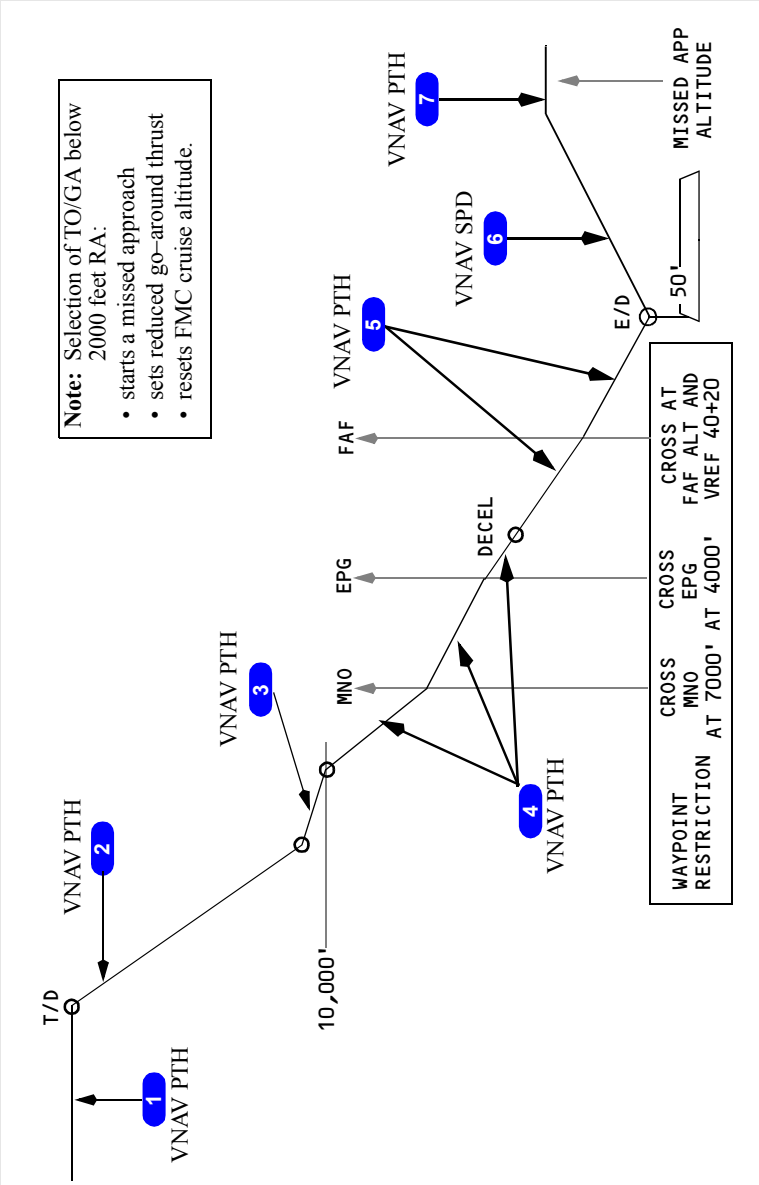

Copyright © The Boeing Company. See title page for details.

DO NOT USE FOR FLIGHT

1 Cruise

Before the top of descent, FMC is in cruise mode and uses VNAV PTH and ECON cruise speed.

2 Descent

After top of descent, FMC is in descent mode and VNAV changes to economy descent speed and descends in VNAV PTH.

3 Speed Restriction Deceleration

Before the speed restriction altitude, VNAV decelerates to commanded speed using VNAV PTH.

When at restricted speed, VNAV commands decreased pitch and descends in VNAV PTH.

4 Altitude Restrictions

The VNAV path conforms to altitude restrictions at MNO, EPG, and the FAF. If required, VNAV uses a level path until intercepting the idle thrust descent path to the next altitude constrained waypoint.

[Option – With geometric descent path]
The VNAV path conforms to altitude restrictions at MNO, EPG, and the FAF. The thrust mode changes to FMC SPD as required to maintain the target speed.

5 Approach

VNAV descends and starts approach in VNAV PTH at the commanded speed.

6 Missed Approach

When TOGA is pushed during approach, or when crossing the missed approach point, VNAV disengages.

When selected during missed approach, VNAV engages in VNAV SPD.

7 Missed Approach Level Off

At missed approach altitude VNAV changes to VNAV PTH.

VNAV Speed Descent

A speed descent may be selected manually by selecting the SPEED prompt on the PATH DES page. With no E/D specified, the speed descent is the only descent mode available.

Copyright © The Boeing Company. See title page for details.

The speed descent maintains the target speed. Normally, the target speed is economy above the airspeed restriction altitude and 240 knots below that altitude, until deceleration is necessary for the approach. VNAV will not permit descent below the altitude restriction until the airspeed is at or below the restricted value.

The speed descent normally begins automatically at the calculated T/D, provided the MCP altitude is reset for the descent. At the T/D, the FMC commands pitch to maintain target descent speed. LNAV does not have to be engaged in order to fly a VNAV speed descent.

The descent attempts to comply with waypoint altitude restrictions, and will not violate these restrictions. The VNAV speed descent will not, however, guarantee the airplane reaches an altitude restriction at the required point.

A speed descent cannot automatically revert to a path descent, except during STAR, approach transition, or approach leg with a vertical angle. However, if all required parameters for a path descent are available, a path descent may be manually selected at any time by selecting the PATH prompt on the speed descent page.

Copyright © The Boeing Company. See title page for details.

DO NOT USE FOR FLIGHT

VNAV Cruise and Speed Descent Profile (Nonprecision Approach)

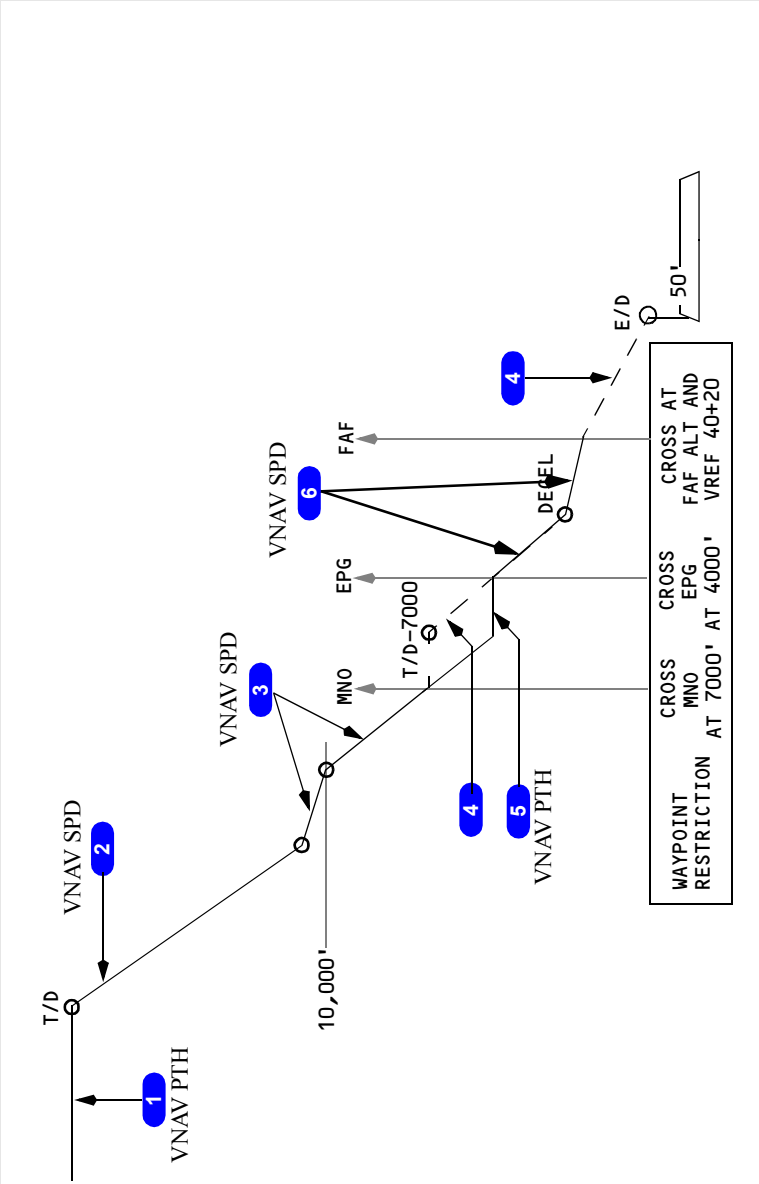

Copyright © The Boeing Company. See title page for details.

[Option – With geometric descent path]

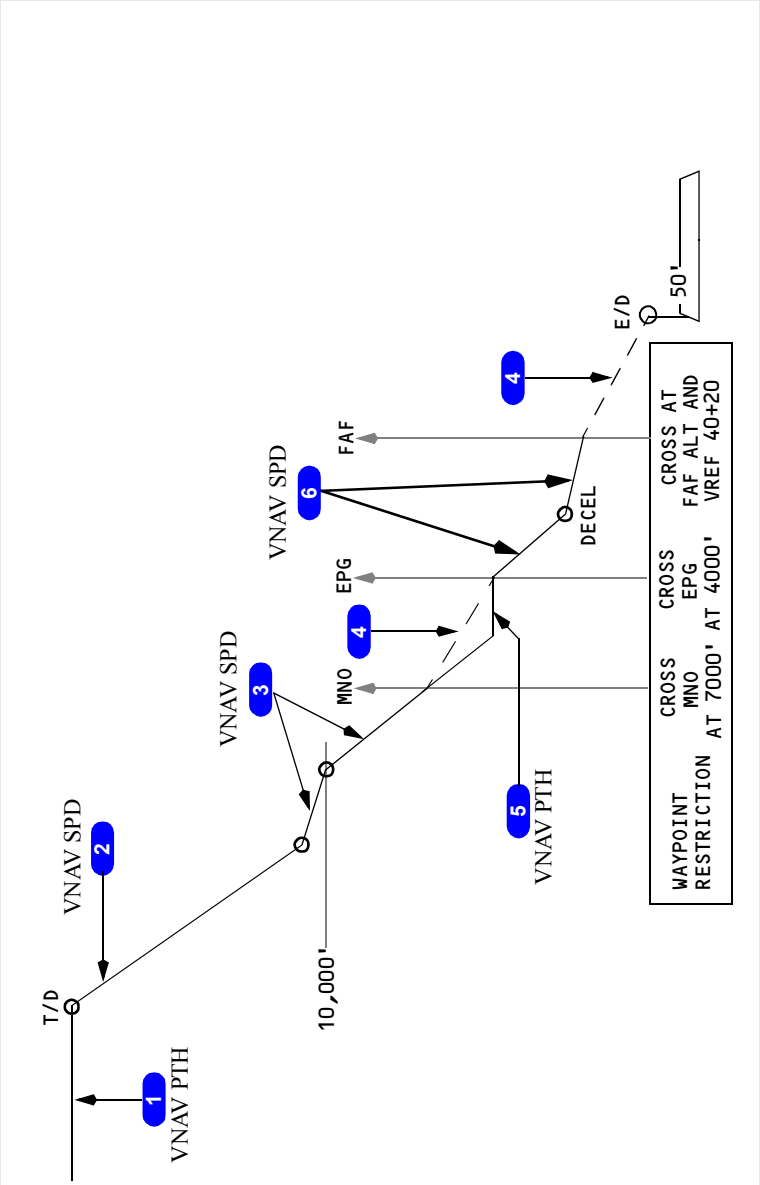

Copyright © The Boeing Company. See title page for details.

DO NOT USE FOR FLIGHT

1 Cruise

Before the top of descent, FMC is in cruise mode and uses VNAV PTH and ECON cruise speed.

2 Descent

After top of descent, FMC is in descent mode and VNAV changes to economy descent speed and descends in VNAV SPD.

3 Speed Restriction Deceleration

Before the speed restriction altitude, VNAV decelerates to commanded speed using VNAV SPD.

When at restricted speed, VNAV commands decreased pitch and descends in VNAV SPD.

4 VNAV Path

During a speed descent, VNAV may not maintain the FMC computed VNAV path. However, if E/D shows, a VNAV path is available.

5 Altitude Restrictions

VNAV conforms to altitude restrictions at MNO and EPG. After MNO VNAV continues an idle thrust descent using VNAV SPD.

Upon reaching the next altitude restriction, VNAV commands level flight using VNAV PTH. The thrust mode changes to FMC SPD.

6 Descent and Approach

After EPG, VNAV continues the idle thrust descent using VNAV SPD.

Prior to the approach, VNAV decelerates to approach speed. The FMC prompts manual flap extension.

Copyright © The Boeing Company. See title page for details.

Vertical Angle

A vertical angle can be assigned to a waypoint from the navigation database. This vertical angle defines a VNAV path between the waypoint and the waypoint preceeding it. This feature can be available in approaches, approach transitions, and STARs. For example, the vertical angle for the glidepath of an ILS approach would typically be 3 degrees. This angle is displayed on the ACT RTE LEGS page above the speed/altitude line for the associated waypoint. Vertical angles may be expected in any approach ending at RWXXX or MAXXX. The E/D will be RWXXX or MAXXX, and the E/D altitude will be either threshold crossing height (TCH – typically 50 feet above the touchdown zone elevation) or the altitude specified at MAXXX.

If a path (VNAV PTH) descent is active when a vertical angle leg becomes active, the path mode will remain active, but VNAV will follow the vertical angle rather than the idle thrust descent path.

If the vertical angle leg becomes active during a speed descent, the VNAV mode will change to VNAV PTH automatically, and there will be no SPEED prompt on the descent page.

Early Descent

A descent in VNAV started before the top of descent point is an early descent. If a path descent is planned, VNAV commands a 1000 fpm descent until the idle descent path is intercepted. If a speed descent is planned, VNAV commands an idle thrust descent.

To start an early descent, use DES NOW prompt on the DES page.

[Option – With speed and altitude intervention]
An early descent can also be started by pushing the altitude intervention switch.

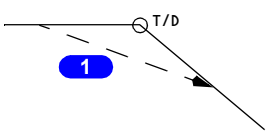

DES NOW (VNAV PTH)

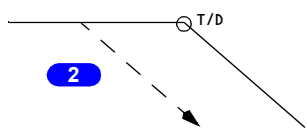

DES NOW (VNAV SPD)

1 DES NOW (VNAV PTH)

With a VNAV path descent planned, VNAV starts an early descent at 1000 fpm and captures the idle descent path. VNAV uses FMC SPD for the autothrottle mode and VNAV PTH for the pitch mode.

Copyright © The Boeing Company. See title page for details.

DO NOT USE FOR FLIGHT

2 DES NOW (VNAV SPD)

With a VNAV speed descent planned, VNAV starts an idle thrust early descent. VNAV does not attempt to capture the VNAV descent path. VNAV uses VNAV SPD for the pitch mode and the autothrottle commands IDLE, followed by ARM.

Approach

The FMC transitions to “on approach” when the airplane is within:

- 2 NM of the first approach waypoint (including approach transitions such as arcs and procedure turns), or
- 2000 feet of airport elevation, whichever occurs first.

When the FMC is “on approach”, the following features are available:

- UNABLE RNP alerting levels are higher
- when preparing for a missed approach and the MCP altitude is set at least 300 feet above the current airplane altitude, VNAV will continue to command a descent
- if the airplane is more than 200 feet below the vertical path, VNAV commands zero vertical speed until intercepting the path.

Note: Display of a specified path angle is not limited to approaches. A path angle may be defined for a leg in a STAR and displays on the RTE LEGS page for the procedure.

The FMC transitions out of “on approach” under the following conditions:

- selecting TO/GA
- the airplane lands
- the waypoint cycles to the first waypoint of the missed approach
- executing a direct-to waypoint in the missed approach.

The following situations are generally encountered during approach operations, but are not determined by “on approach” logic:

- If speed intervention is engaged:
  - during a path descent with flaps up on an idle leg, VNAV switches to VNAV SPD
  - with flaps down, VNAV remains in VNAV PTH
  - when a point to point (geometric path) leg is active, VNAV remains in VNAV PTH
  - while a vertical angle leg (GP x.xx on RTE LEGS page) is active, VNAV remains in VNAV PTH
- if a vertical angle leg (GP x.xx on RTE LEGS page) becomes active, VNAV switches to VNAV PTH without pilot action
- if on a vertical angle leg, and cross track exceeds two times the RNP value, while LNAV is not engaged, VNAV will disengage.

Copyright © The Boeing Company. See title page for details.

VNAV will remain engaged at all flap settings, allowing approaches to be flown using the vertical angle guidance. Speed for final approach can be set on the APPROACH REF page.

[Option – FMC U10.3 and later]
If an ILS approach is flown in VNAV using vertical angle guidance, VNAV will disconnect when passing the GS–XXX point if G/S is armed, but it can be reengaged. If the GS–XXX point is deleted, VNAV will remain engaged throughout the approach.

For an approach without a runway waypoint on the RTE LEGS page, the VNAV path is calculated to the MDA or a calculated altitude at the missed approach point. The calculated altitude may be below the MDA to ensure a flight path angle and normal threshold crossing height.

Note: It is the flight crew's responsibility not to descend below the MDA until adequate visual contact is achieved.

Go-Around

Below 2000 feet radio altitude, a go-around can be initiated by any of the following methods:

- pushing either TO/GA switch while in a descent
- selecting Go-Around Thrust Limit when below MCP altitude with N1 autothrottle mode engaged
- executing a direct-to waypoint in the missed approach (other than the missed approach point)
- automatically while in a decent and the last waypoint of the approach cycles to the first waypoint of the missed approach.

Once the go-around is initiated:

- the thrust limit changes to go-around thrust
- the FMC transitions from active descent to active climb
- all descent altitude constraints below the current airplane altitude are deleted and replaced with predicted altitudes
- the original destination airport (airport from which the go-around was just initiated) becomes the new origin airport allowing SID selection if a diversion to another airport is required.

Note: VNAV and LNAV can only be engaged when the airplane climbs above 400 feet radio altitude, unless the loaded missed approach procedure is from the navigation database in which case VNAV and LNAV can be engaged below 400 feet radio altitude.

Copyright © The Boeing Company. See title page for details.

DO NOT USE FOR FLIGHT

If the go-around was initiated by pushing a TO/GA switch or selection of go-around thrust, the CRZ ALT will change to the highest of:

- the highest constraint in the missed approach
- 1500 feet above airport elevation
- the MCP altitude.

Note: If the MCP altitude is the lowest of the three, the autopilot, if engaged, will level off at the MCP altitude.

If the go-around was initiated by direct-to or waypoint sequencing, the CRZ ALT will change to the highest of:

- the highest constraint in the missed approach
- 1500 feet above airport elevation.

If VNAV is engaged to fly the missed approach, the thrust limit changes to climb.

Refer to section NP20.xx, Go-Around Procedure and section 4.20, Go-Around for additional information.

Copyright © The Boeing Company. See title page for details.

VNAV Cruise (Engine Out Above Eng Out Max Alt)

[Option – FMC U10.3 and later]

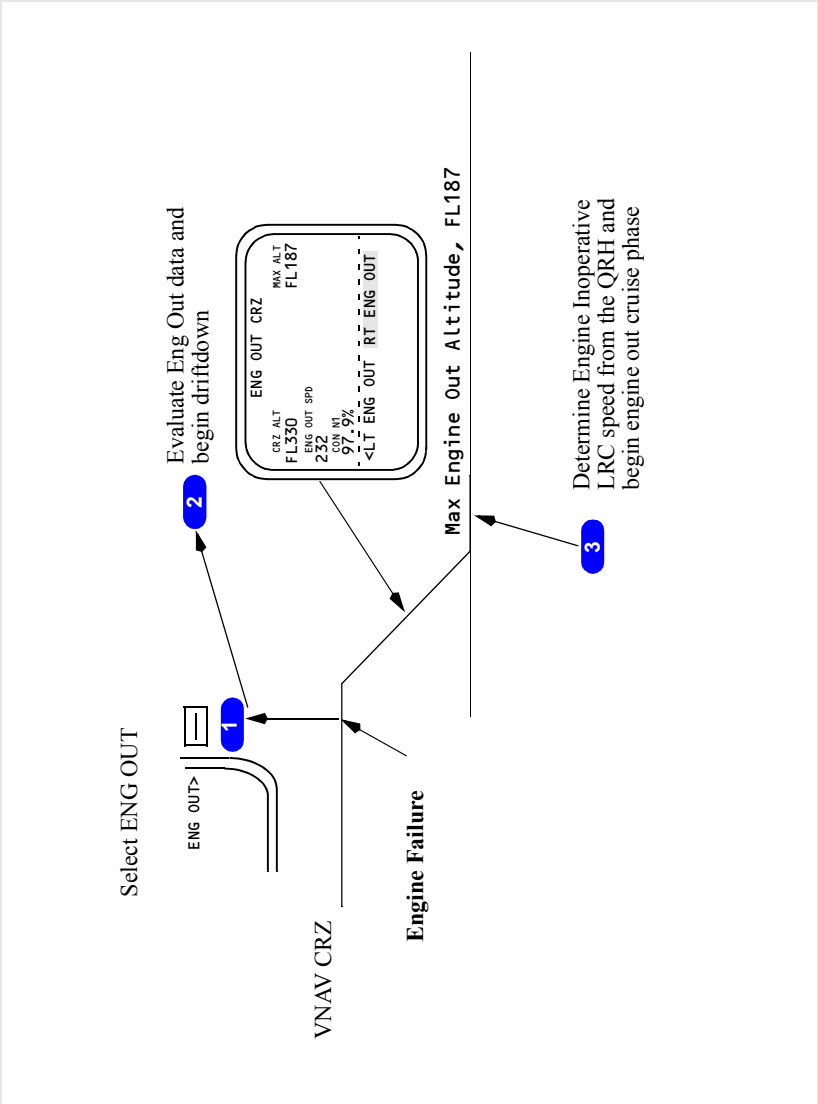

Copyright © The Boeing Company. See title page for details.

DO NOT USE FOR FLIGHT

1 Engine Out Modification

Select the ENG OUT prompt on the CRZ page. The ENG OUT page displays the appropriate engine out driftdown performance data to enable the airplane to descend to the engine out maximum altitude. Refer to FMC Cruise, section 11.42 for a complete description of the ENG OUT CRZ page.

2 Drift Down Execution

After selecting the left or right ENG OUT mode, perform the driftdown as follows:

- disconnect A/T
- set maximum continuous thrust on operating engine (N1 line)

[Option – FMC U10.3 and later]

- set MCP speed to ENG OUT SPD
- set MCP altitude to MAX ALT or lower altitude as required
- select LVL CHG.

The airplane then descends at CON thrust and the driftdown airspeed to the MAX ALT. As the driftdown proceeds and airplane gross weight decreases, the maximum altitude may increase.

Note: The engine out cruise page provides advisory performance data for operating with one engine.

3 Engine Out Cruise

Engine out cruise operates like normal cruise with engine out cruise speeds. If range is a factor, determine Engine Inoperative LRC speed from the QRH. Thrust limit remains in CON.

Required Time of Arrival (RTA)

VNAV controls cruise speed to achieve a flight crew specified arrival time at a specified waypoint. After the appropriate waypoint and RTA are input to the FMC, the FMC will compute a recommended takeoff time, speeds required to comply with the RTA, and progress information for the flight. If the RTA is not achievable, the RTA UNACHIEVABLE scratchpad message is displayed.

Data Entry Rules

Altitude Entry

Altitudes can be entered into the FMC as three digit (xxx), four digit (xxxx), five digit (xxxxx), or flight level (FLxxx) numbers. The FMC automatically displays altitude or flight level entries in the proper form based on the transition altitude. Some data lines further restrict the valid entry forms.

Copyright © The Boeing Company. See title page for details.

Three digit entries represent altitude or flight levels in increments of 100 feet. Leading zeros are required.

Examples of three digit (xxx, FLxxx) entries with transition altitude = 10,000 feet:

- 800 feet is entered as 008 or FL008 and displayed as 800
- 1,500 feet is entered as 015 or FL015 and displayed as 1500
- 11,500 feet is entered as 115 or FL115 and displayed as FL115
- 25,000 feet is entered as 250 or FL250 and displayed as FL250.

Four digit entries represent feet, rounded to the nearest ten feet. Leading zeros are required. This form is used when the altitude does not exceed 9,994 feet.

Examples of four digit (xxxx) entries with transition altitude = 18,000 feet:

- 50 feet is entered as 0050 and displayed as 50
- 835 feet is entered as 0835 and displayed as 840
- 1,500 feet is entered as 1500 and displayed as 1500
- 8,500 feet is entered as 8500 and displayed as 8500
- 9,994 feet is entered as 9994 and displayed as 9990.

Five digit entries represent feet, rounded to the nearest ten feet. This form is used when the altitude exceeds 9,994 feet.

Examples of five (xxxxx) digit entries with transition altitude = 4,000 feet:

- 50 feet is entered as 00050 and displayed as 50
- 835 feet is entered as 00835 and displayed as 840
- 1,500 feet is entered as 01500 and displayed as 1500
- 8,500 feet is entered as 08500 and displayed as FL085
- 9,995 feet is entered as 09995 and displayed as FL100
- 11,500 feet is entered as 11500 and displayed as FL115
- 25,000 feet is entered as 25000 and displayed as FL250.

Negative altitude entries are allowed to –1000 feet.

Airspeed Entry

Airspeeds can be entered into the FMC as calibrated airspeed or Mach number. Calibrated airspeeds are entered as three digits (xxx) in knots. Mach numbers are entered as one, two, or three digits following a decimal point.

Copyright © The Boeing Company. See title page for details.

DO NOT USE FOR FLIGHT

Data Pairs

Many CDU pages display data in pairs separated by a slash "/." Examples of these pairs include wind direction/speed and waypoint airspeed/altitude restrictions. When entering both values in a pair, the slash is inserted between the values. When it is possible to enter only one value of the pair, the slash may not be required. When entering only the outboard value of a pair, the trailing or leading slash may be entered, but is not required before transferring to the data line. When entering the inboard value of a pair, the trailing or leading slash must be entered before transferring to the data line. Omission of the required slash normally results in an INVALID ENTRY message.

Bearing Entry

Entry of a bearing value requires three digits. For example, key 090, not 90. A bearing entry of 360 is displayed as 000.

Plus/Minus Signs

When entering temperature or an along–track displacement distance, positive values are assumed by the FMC and + signs are not required. For negative values, key in the – sign.

Copyright © The Boeing Company. See title page for details.

FMC Databases

The FMC contains two databases:

- performance database
- navigation database.

The performance database eliminates the need for the flight crew to refer to a performance manual during flight, and provides the FMC with the information required to calculate pitch and thrust commands. All information normally required can be displayed on the CDU. The database includes:

- airplane drag and engine characteristics
- maximum and optimum altitudes
- maximum and minimum speeds.

Maintenance personnel can refine the database by entering correction factors for drag and fuel flow.

The navigation database includes most information normally determined by referring to navigation charts. This information can be displayed on the CDU or navigation display. The database contains:

- the location of VHF navigation aids
- waypoints
- airports
- runways
- other airline selected information, such as SIDs, STARs, approaches, and company routes.

If the permanent database does not contain all of the required flight plan data, additional airports, navaids, and waypoints can be defined by the crew and stored in either a supplemental or a temporary navigation database. Use of these additional databases provides world–wide navigational capability, with the crew manually entering desired data into the FMC via various CDU pages. Information in the supplemental navigation database is stored indefinitely, requiring specific crew action for erasure; the temporary navigation database is automatically erased at flight completion.

The supplemental and temporary databases share storage capacity for forty navaids and six airports, the entries being stored in either database on a first come, first served basis. For the waypoint category, exclusive storage is reserved in the temporary database for twenty entries (including those created on the RTE or RTE LEGS pages). An additional twenty waypoints (up to a maximum of forty) can be stored in either the temporary or supplemental database on a first come, first served basis.

Copyright © The Boeing Company. See title page for details.

DO NOT USE FOR FLIGHT

When any storage capacity is full, entries which are no longer required should be deleted by the crew to make space for additional new entries. Created waypoints cannot be stored in the database runway category.

The FMC contains two sets of navigation data, each valid for 28 days. Each set corresponds to the normal navigation chart revision cycle. The FMC uses the active set for navigation calculations. The contents of the navigation database are periodically updated and are transferred to the FMC before the expiration date of the current data.

Thrust Management

The autothrottle operates in response to flight crew mode control panel inputs or to automatic FMC commands. Reference thrust can be selected on the N1 LIMIT page. Automatic FMC autothrottle commands are made while VNAV is engaged. The autothrottle system:

- uses reference thrust limits calculated by the FMC
- commands the thrust levers
- commands thrust equalization through the electronic engine controls.

Thrust limits are expressed as N1 limits. Thrust equalization references N1.

The FMC calculates a reference thrust for the following modes:

- takeoff
- derated takeoff
- assumed temperature takeoff
- climb
- reduced climb
- cruise
- continuous
- go–around.

[Option – With takeoff bump thrust]
The FMC calculates a reference thrust for the following modes:

- takeoff
- derated takeoff
- assumed temperature takeoff
- takeoff bump
- climb
- reduced climb
- cruise
- continuous
- go–around.

[Option –With takeoff bump thrust and quiet climb]
The FMC calculates a reference thrust for the following modes:

- takeoff
- derated takeoff
- assumed temperature takeoff
- takeoff bump
- climb
- reduced climb
- cruise
- continuous
- go–around
- noise abatement (cutback).

Copyright © The Boeing Company. See title page for details.

The thrust reference mode automatically transitions for the respective phase of flight. These modes can be selected on the N1 LIMIT page. The selected thrust reference mode is displayed on the thrust mode display.

[Option – FMC U10.1 and later, with automatic thrust reduction after takeoff]
The flight crew can specify the thrust reduction height where the transition from takeoff to climb thrust takes place by making an entry on TAKEOFF REF page 2. Allowable entries are 800 feet to 15,000 feet.

[Option – FMC U10.3 and later]
The default value is determined by the airline and is stored in the model/engine database.

[Option – With quiet climb]
With cutback mode selected ON, the flight crew can specify the thrust reduction and restore altitudes on TAKEOFF REF page 2. The FMC calculates and commands a cutback thrust rating based on data provided through the model/engine database. In addition the FMC uses the reduction altitude to calculate the required cutback altitude. A new N1 is calculated during climb and normal climb thrust is restored at the RESTORE altitude.

Reduced Thrust Takeoff

Reduced thrust takeoffs lower EGT and extend engine life. They are used whenever performance limits and noise abatement procedures permit.

Takeoff Derate

[Option – FMC U10.1 and later]
Fixed derates can be selected on the N1 LIMIT page. Performance data for these derates is provided in the Airplane Flight Manual (AFM).

With derated takeoff selected, the thrust setting parameter is considered a limitation for takeoff; therefore, thrust levers should not be advanced further except in an emergency. A further thrust increase following an engine failure could result in a loss of directional control while on the ground. Use the takeoff speeds supplied by the FMC or specified in Chapter PI, Performance-Inflight, for the selected derate condition.

Derated takeoff rating can be further reduced by assumed temperature.

[Option – With FMC computed QRH takeoff speeds]
Use the takeoff speeds provided by the FMC or specified in Chapter PI, Performance–Inflight, for the selected derate or variable takeoff rating condition.

Use the takeoff speeds specified in Chapter PI, Performance–Inflight, for the selected derate or variable takeoff rating condition.

Copyright © The Boeing Company. See title page for details.

DO NOT USE FOR FLIGHT

Assumed Temperature Thrust Reduction Takeoff

[Option – FMC U10.1 and later]

A takeoff thrust less than the full rated thrust may be achieved by using an assumed temperature that is higher than the actual temperature. The desired thrust level is obtained through entry of a SEL TEMP value on the N1 LIMIT page or TAKEOFF REF page 2. Use approved sources for selecting the assumed temperature.

The maximum thrust reduction authorized is 25 percent below any certified rating. Do not use assumed temperature reduced thrust if conditions exist that affect braking, such as slush, snow, or ice on the runway, or if potential windshear conditions exist.

If the assumed temperature method is applied to a fixed derate, application of additional power should not exceed the fixed derate N1 limit as loss of directional control could occur while on the ground.

When the assumed temperature method is used with full rate, the reduced thrust setting is not considered a limitation. If conditions are encountered where additional thrust is desired, the crew can manually apply full thrust.

Takeoff Bump Thrust

[Option]

Takeoff bump thrust may be used to meet extra thrust requirements for takeoff at certain airports. Takeoff bump thrust provides thrust above normal maximum takeoff thrust. The takeoff thrust bump setting may be selected on the N1 LIMIT page. Takeoff thrust bump is only available for takeoff, and cannot be applied to go around, max continuous, or climb thrust ratings. If takeoff thrust bump is selected, assumed temperature reduced thrust is not available.

Derated Thrust Climb

Two fixed climb thrust derates can be selected on the N1 LIMIT page. CLB–1 provides a climb limit reduced by 3% N1 (approximately 10% thrust). CLB–2 provides a climb limit reduced by 6% N1 (approximately 20% thrust). The reduced climb setting gradually increases to full rated climb thrust by 15,000 feet. In cruise, the thrust reference automatically changes to CRZ. The reference can be manually selected on the N1 LIMIT page.

Use of an assumed temperature reduced thrust takeoff or takeoff derate affects the FMCs climb derate computation. If a reduced thrust takeoff has been specified on the TAKEOFF REF page, the FMC will re-compute CLB-1 and CLB-2 values as required to avoid a climb N1 value greater than the reduced thrust takeoff N1 value.

Use of derated climb thrust reduces engine maintenance costs, but increases total trip fuel.

Copyright © The Boeing Company. See title page for details.

Fuel Monitoring

The FMC receives fuel data from the fuel quantity indicating system. Fuel quantity values show on the PERF INIT page and on PROGRESS page 1/3.

The scratchpad message VERIFY GW AND FUEL shows if total fuel quantity data is invalid. The PERF INIT page FUEL line changes to dashes. The FMC uses the last valid fuel quantity for performance predictions and VNAV operation. The flight crew should manually enter estimated fuel weight. Periodic fuel weight update is required for the remainder of the flight to keep gross weight current. The FMC does not update the manual fuel weight entry. The scratchpad message VERIFY GW AND FUEL shows again each 30 minutes if subsequent entries are not performed. The scratchpad message does not show during descent with Vref selected.

The scratchpad message CHECK FMC FUEL QUANTITY shows if the FMC has detected an unexpected drop in fuel quantity.

The FMC continually estimates the amount of fuel that will remain when the destination airport is reached if the active route is flown. The CDU message USING RSV FUEL is displayed if the estimate is less than the fuel reserve value entered on the PERF INIT page. The CDU message INSUFFICIENT FUEL is displayed if predicted fuel at destination will be 2000 lb (900 kg) or less.

Loss of FMC Electrical Power

The FMC requires continuous electrical power to operate. When the electrical power is interrupted for less than ten seconds:

- LNAV and VNAV disengage
- all entered data is retained by the FMC
- the FMC resumes normal operation when power is restored.

If power is lost for ten seconds or more on the ground, all preflight procedures and entries must be done again when power is restored.

If power is lost for more than ten seconds in flight:

- LNAV and VNAV disengage
- all entered data is retained by the FMC, and when power is restored the RTE LEGS page is displayed with the scratchpad message SELECT ACTIVE WPT/LEG.

Before LNAV can engage, the FMC must be instructed how to return to the route. Select the desired active waypoint and proceed direct or intercept a course to the waypoint.

Copyright © The Boeing Company. See title page for details.

DO NOT USE FOR FLIGHT

FMC Failure

[Option – Dual FMC]

Single FMC Failure

The FMC/CDU is designed to automatically preserve the most capable modes of navigation and guidance that can be maintained with the equipment and navigation aids available. If an error or system failure results in reduced capability, then the FMC may generate a crew message for display in the CDU scratchpad. If other system inputs to the FMC should fail, affected CDU displays are blanked to prevent the display of misleading or erroneous data. For example, loss of the total fuel input causes some performance related data to be blank. The messages and FMC internal responses provide an orderly transition from full FMC guided flight to less automated capability.

If the right FMC fails, the FMC alert light and the FMC message light will illuminate. The message SINGLE FMC OPERATION will be displayed in both scratchpads. VTK will display on the right navigation display. LNAV and VNAV will disengage if autopilot B is in use (can be reengaged if autopilot A is selected). After 25 to 30 seconds, the right navigation display will display failure information. The right navigation display may be restored by placing the FMC source select switch to BOTH ON L.

Note: If the above indications are observed with no VTK on the right navigation display, there is a disagreement between left and right FMC data. Moving the FMC Source Select Switch to BOTH ON L should allow the two FMCs to resynchronize. The switch may then be returned to NORMAL when the message DUAL FMC OP RESTORED is displayed on both scratch pads.

[Option – MCDU]
If the left FMC fails, the FMC alert light will illuminate. The MENU page will appear on both CDUs. VTK will appear on the left navigation display. LNAV and VNAV will disengage, but can be reengaged if autopilot B is in use or is selected. After 25 to 30 seconds, the left navigation display will display failure information. To restore full operation, the FMC source select switch must be moved to BOTH ON R.

[Option – FMC U10.2 and later]
Note: During an FMC software restart, the navigation display map track may rapidly slew to 0 degrees then to the correct value.

Copyright © The Boeing Company. See title page for details.

Dual FMC Failure

[Option – MCDU]
If both FMCs fail, the FMC alert light will illuminate. The MENU page will appear on both CDUs. VTK will appear on both navigation displays. LNAV and VNAV will disengage. After 25 to 30 seconds, both navigation displays will display failure information.

FMC Failure

[Option – Single FMC]

[Option – CDU]
If the FMC fails, the FMC alert light will illuminate. The FMC/CDU FAIL light will appear on both CDUs, and both CDUs will display failure modes. VTK will appear on both navigation displays. LNAV and VNAV will disengage. After 25 to 30 seconds, both navigation displays will display failure information.

[Option – MCDU]
If the FMC fails, the FMC alert light will illuminate. The MENU page will appear on both CDUs. VTK will appear on both navigation displays. LNAV and VNAV will disengage. After 25 to 30 seconds, both navigation displays will display failure information.

[Option – FMC U10.2 and later]
Note: During an FMC software restart, the navigation display map track may rapidly slew to 0 degrees then to the correct value.

Copyright © The Boeing Company. See title page for details.

DO NOT USE FOR FLIGHT

Intentionally
Blank

Copyright © The Boeing Company. See title page for details.

[Option]

Company Data Link

The airplane communications system enables two–way data link communications between the FMC and airline operations. A downlink occurs when data is transferred from the FMC and transmitted through the airplane communications system to a receiver on the ground. Data may be downlinked from the FMC either manually or automatically. An uplink is the opposite of a downlink; data is transmitted from a ground station for input to the FMC. Data may be uplinked at the discretion of the airline operations dispatcher or in response to a downlink request.

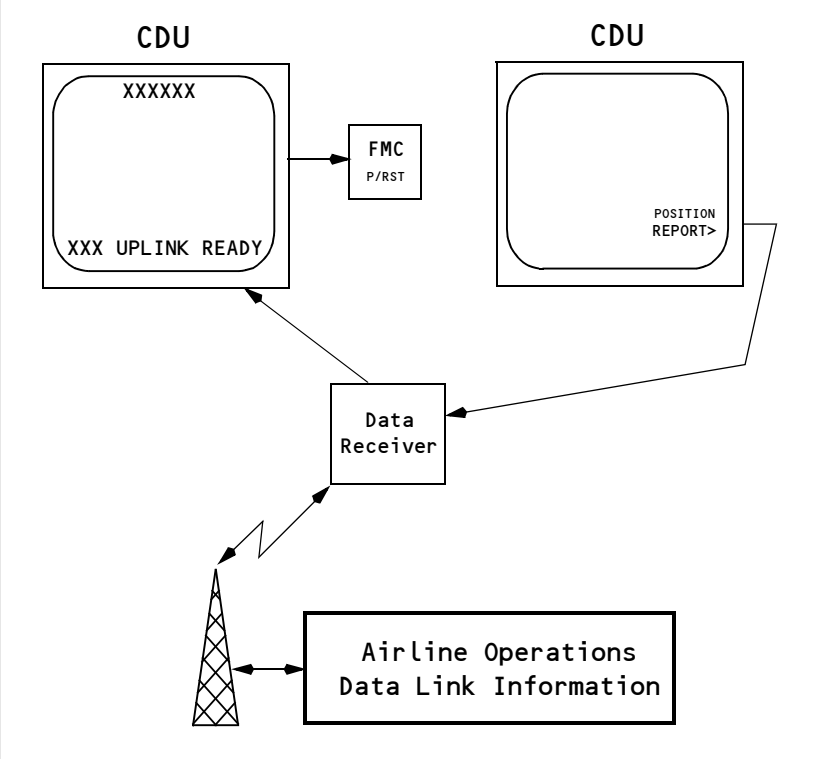

Copyright © The Boeing Company. See title page for details.

DO NOT USE FOR FLIGHT

Data Link

Downlinks are data link messages transmitted to a ground station. Requests for data and reports of FMC information are two types of downlinks. Requests are made manually by the flight crew. Reports can be made manually or may occur automatically.

Uplinks are messages transmitted to the airplane. Most uplinks require manual selections by the flight crew. Some uplinks are input automatically.

Manual Downlinks

Select a REQUEST prompt to start the downlink request for data. REQUEST prompts are on PERF INIT, PERF LIMITS, TAKEOFF REF, PROGRESS, DES FORECASTS, RTE, ALTERNATE DEST, RTE DATA, and SUPP NAV DATA pages. Downlink reports of the active route may be accomplished by selection of the REPORT prompt on the PERF LIMITS or PROGRESS page and a position report may be downlinked by selection of the REPORT prompt on the PROGRESS page. The contents of the supplemental navigation database can be downlinked by selection of the REPORT prompt on the SUPP NAV DATA page.

When the communications function is unable to process FMC downlinks, the words FAIL, VOICE, NO COMM, or FULL are displayed on the CDU pages in place of the REQUEST and REPORT prompts and the header line displays the word DATALINK. The status messages are:

- FAIL
  - the ACARS management unit is inoperative
- VOICE
  - radio is operating in the VOICE mode
- NO COMM
  - radio is operational but not available
- FULL
  - all available downlink space is full.

Reports

A REPORT prompt on each page downlinks a unique report applicable to that page. The pages below contain report prompts.

Copyright © The Boeing Company. See title page for details.

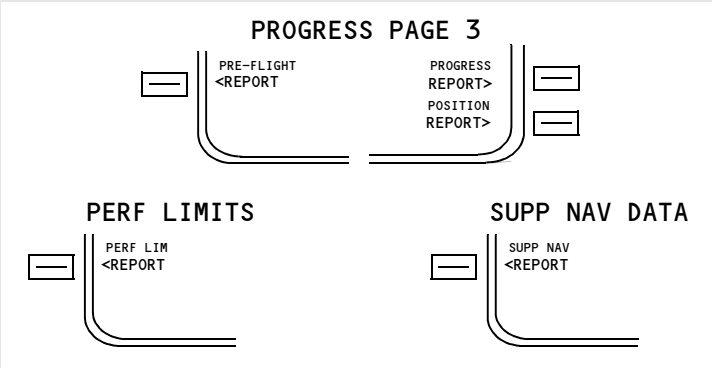

CDU Pages

Report Status

Below is a typical sequence of status in response to sending a report.

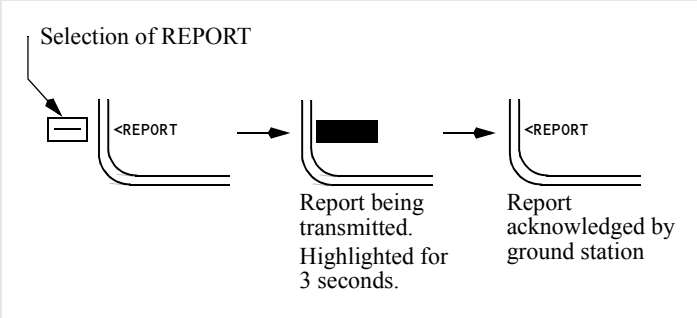

CDU Page

Automatic Downlinks

The FMC can be configured by the airline to automatically transmit downlinks of FMC data at predetermined points during the flight or in response to specific information requests from the airline dispatcher. The FMC response in these cases is completely automatic and no crew action is necessary.

Uplinks

Uplinked data may be loaded automatically or may require flight crew action. Three uplinks automatically load data into the FMC when the REQUEST prompt is selected and do not require execution.

Copyright © The Boeing Company. See title page for details.

DO NOT USE FOR FLIGHT

Uplinked data that waits in system memory for flight crew action are considered to be pending. A pending uplink is included or discarded when the flight crew selects the applicable prompt. Flight crew response to an uplink depends on the type of uplink. Flight crew action is made with ACCEPT/REJECT or LOAD prompts, FMC modification ERASE prompt or EXEC key, or when the page with the uplink is selected.

Data can be uplinked from the airline dispatcher directly to the FMC. The uplinks are annunciated to the crew by the FMC alert lights. The uplink is identified by a CDU scratchpad message.

PERF INIT uplinks are available only on the ground and after an origin airport has been entered on the RTE page.

RTE DATA cruise winds are available when not in descent and a cruise altitude and a flight plan route exist.

DES FORECASTS winds are available if a cruise altitude exists.

Long Delete Function

[Option – MCDU]

During uplink, CDU keys are ignored until data is loaded into the FMC. The uplink may be suspended by pressing and holding down the DEL key for at least one second. For all uplinks, except SUPP NAV DATA uplinks, the loaded data is then removed from the flight plan and placed back into the ready to be loaded state.Uplinks that do not generate a modified plan are reloaded when there has been no CDU pushbutton activity for 30 seconds. Uplinks that do generate a modified plan can be reloaded using the LOAD prompt on the appropriate page.

When the long delete is used during a SUPP NAV DATA uplink, the uplink is suspended, but the data loaded up to that point remains in the database.After 30 seconds of keyboard inactivity, the remaining data is loaded.

Requests

A REQUEST prompt on each page downlinks a unique request applicable to that page. The pages below contain request prompts.

Copyright © The Boeing Company. See title page for details.

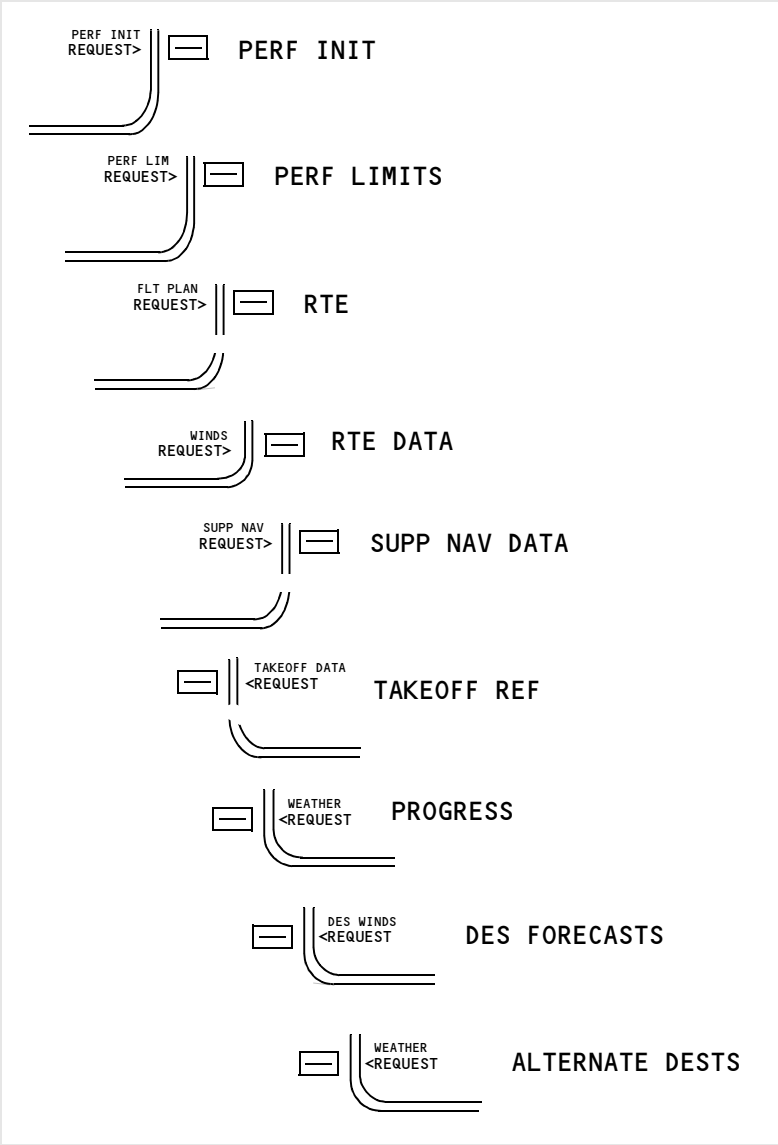

CDU Pages

Request Status

Below is a typical sequence of status in response to sending a request.

Copyright © The Boeing Company. See title page for details.

DO NOT USE FOR FLIGHT

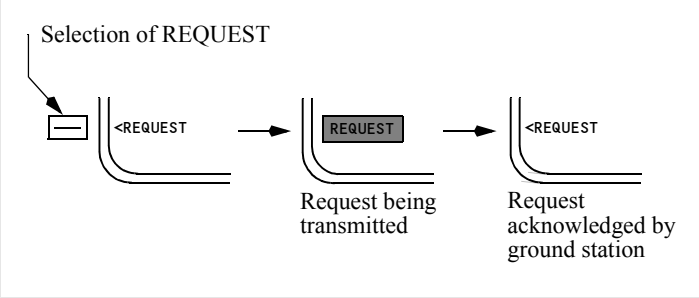

CDU Page

FMC Data Link Uplinks (Accept/Reject)

ACCEPT and REJECT are shown on the TAKEOFF REF 1/2 page following receipt of uplink data.

Uplink data for the current runway is shown initially in small font for preview.

Selecting ACCEPT:

- displays uplinked data in large font
- replaces previous data with uplinked data
- returns page display to normal (pre–uplink) format
- clears scratchpad message
- transmits a downlink accept message (if enabled) to acknowledge acceptance.

Selecting REJECT:

- replaces uplinked data with previous data
- returns page display to normal (pre–uplink) format
- clears scratchpad message
- transmits a downlink reject message (if enabled) to inform of rejection.

Copyright © The Boeing Company. See title page for details.

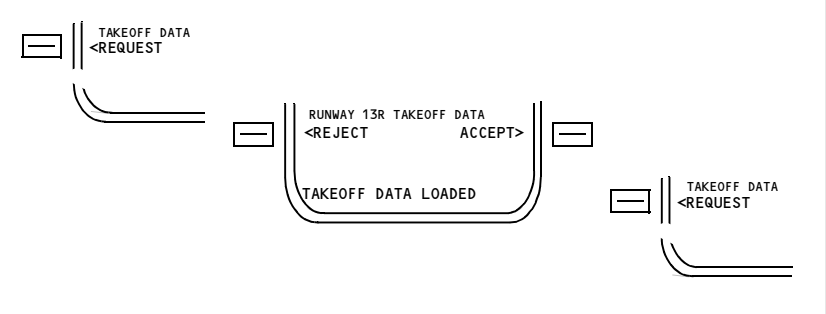

CDU Pages

FMC Data Link Uplinks (Load/Activate/Exec)

LOAD is shown on the RTE page after receipt of uplink data. After the uplinked data is loaded, the ACTIVATE prompt is shown. After selecting ACTIVATE, the EXEC light illuminates.

Selecting LOAD:

- loads uplinked data into FMC for viewing
- updates scratchpad message
- transmits a downlink accept message (if enabled) to acknowledge acceptance.

Selecting ACTIVATE and EXEC:

- puts uplinked data in active flight plan
- returns page display to normal (pre–uplink) format
- clears scratchpad message
- transmits a downlink accept message (if enabled) to acknowledge acceptance.

Copyright © The Boeing Company. See title page for details.

DO NOT USE FOR FLIGHT

[Option – Liquid crystal display CDU or Liquid crystal display MCDU or Liquid crystal FANS MCDU]

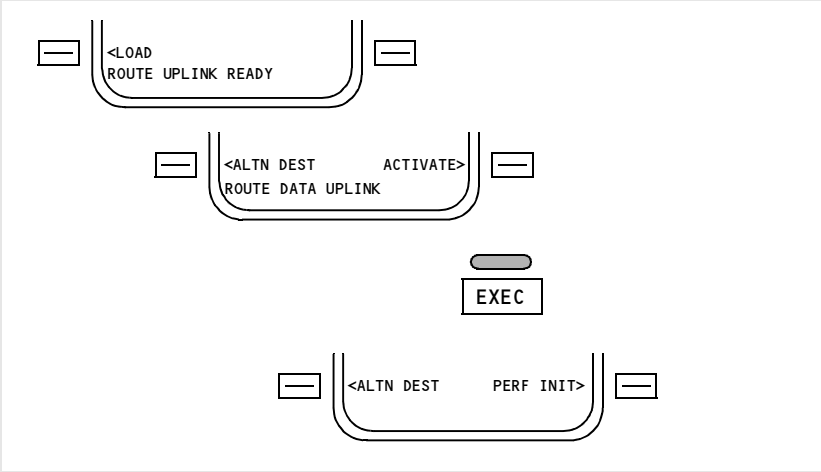

CDU Pages

FMC Data Link Uplinks (Load/Exec–Erase)

LOAD shows on the PERF INIT, PERF LIMITS, RTE DATA, and DES FORECASTS pages after receipt of uplink data.

After the uplinked data is loaded, the EXEC light illuminates and the ERASE prompt is displayed.

Selecting LOAD:

- loads uplinked data into FMC for viewing
- updates scratchpad message
- uplinked data modifies previous data
- ERASE prompt displays
- EXEC light illuminates.

Pushing the EXEC key:

- incorporates modified data into active flight plan
- clears scratchpad message
- returns page display to normal (pre–uplink) format
- transmits a downlink accept message (if enabled) to acknowledge acceptance.

Selecting ERASE:

- removes modified data
- clears scratchpad message

Copyright © The Boeing Company. See title page for details.

- returns page display to normal (pre–uplink) format.
- transmits a downlink reject message (if enabled) to inform of rejection.

[Option – Liquid crystal display CDU or Liquid crystal display MCDU or Liquid crystal FANS MCDU]

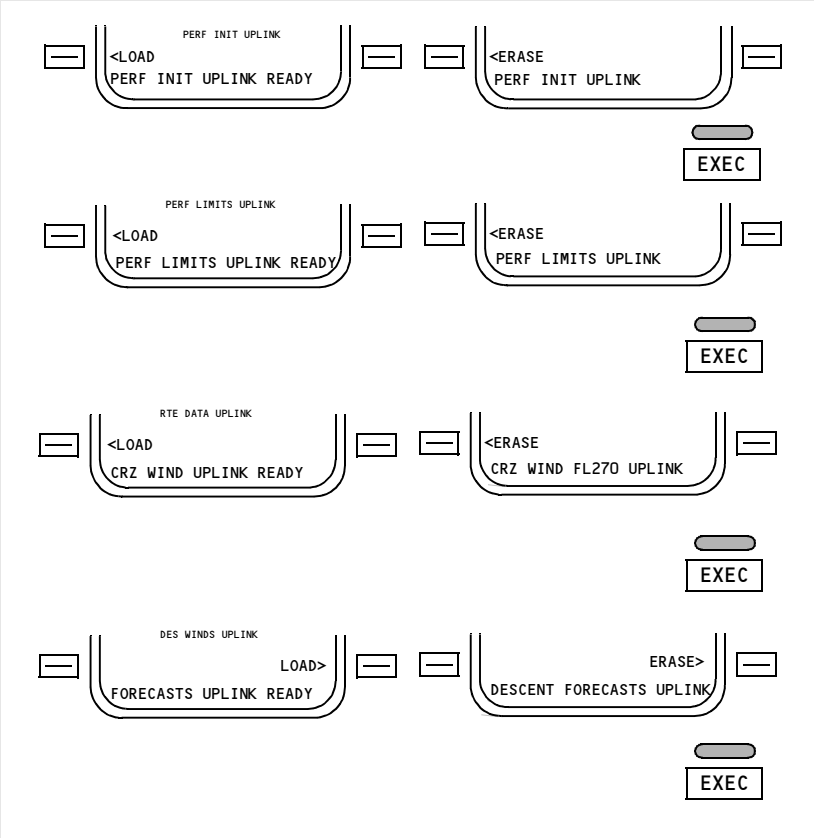

CDU Pages

FMC Data Link Uplinks (Request)

Selecting the REQUEST prompt is the only action required to uplink data on the PROGRESS, ALTERNATE DEST, and SUPP NAV DATA pages.

After the uplinked data is loaded, an uplink message appears in the scratchpad.

Copyright © The Boeing Company. See title page for details.

DO NOT USE FOR FLIGHT

Selecting REQUEST:

- loads uplinked data into FMC
- displays scratchpad message when uplink complete
- uplinked data modifies previous data.

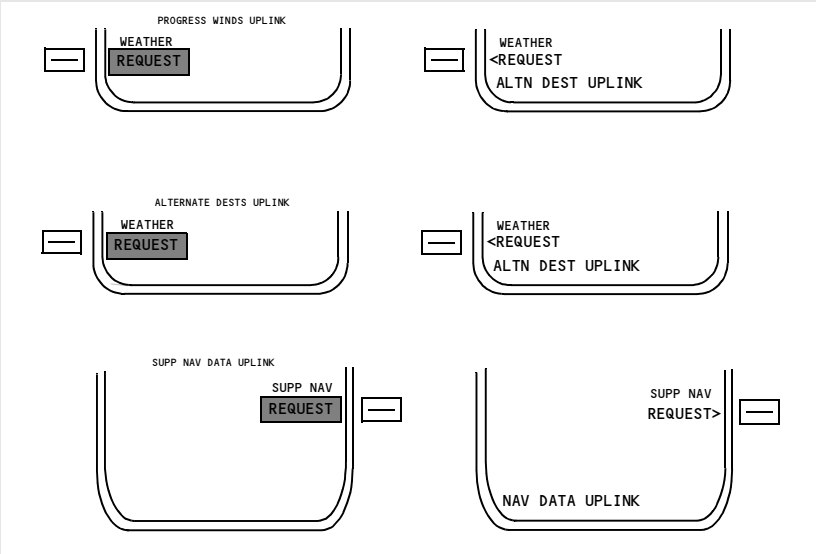

CDU Pages

FMC Data Link Uplinks (Automatic)

Data can be automatically uplinked.

The scratchpad message XXXXX UPLINK READY is displayed and the FMC alert light illuminates.

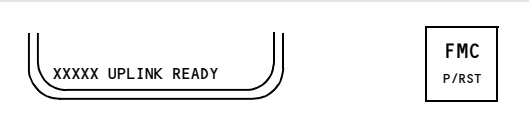

CDU Pages

Data Link Management

The flight crew should monitor system status of FMC data link by observing status displays on CDU pages.

Copyright © The Boeing Company. See title page for details.

CDU Data Link Status Displays

Data link operation is verified when the correct line title is above the related prompt. In the example below, the line title TAKEOFF DATA is above the REQUEST prompt on the TAKEOFF REF page.

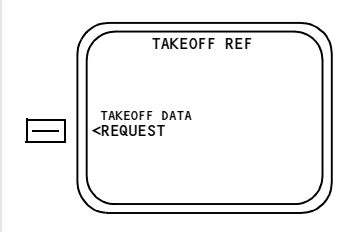

CDU Pages

When the data link system is not operating, CDU page prompts change to FAIL, VOICE, NO COMM or FULL and the headings change to DATALINK. A typical example is shown below.

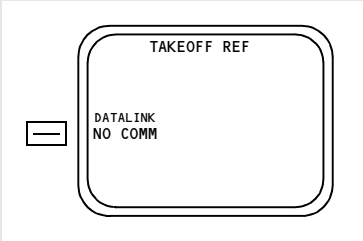

CDU Pages

Copyright © The Boeing Company. See title page for details.

DO NOT USE FOR FLIGHT

FMC Communications Page

[Option – FANS MCDU with company data link]

FMC communication page provides ability to initiate AOC datalink downlink requests. The actual prompts available and types of information requests generated is customer definable. The page examples below are representative only.

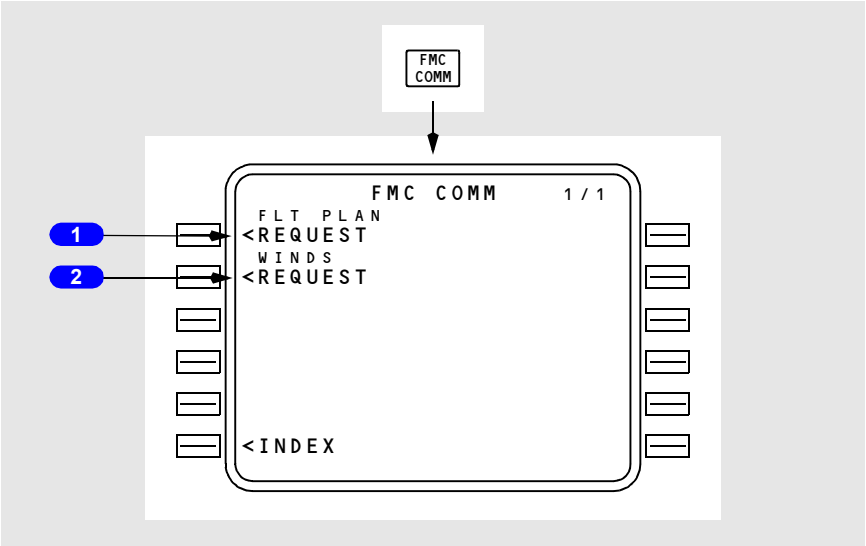

1 Flight Plan Request (FLT PLAN REQUEST)

Push – transmits a data link request for a flight plan uplink.

2 WINDS REQUEST

Push – transmits a data link request for a winds uplink.

Copyright © The Boeing Company. See title page for details.

Introduction

Completion of the FMC preflight requires data entry in all minimum required data locations. Completing all required and optional preflight data entries ensures the most accurate performance possible.

[Option – With company data link]
Data link can be used to load preflight data from airline ground stations. Using data link reduces the required crew actions. Manual crew entries replace existing data. Data link can also be used to load takeoff data onto the TAKEOFF REF pages.

Preflight Page Sequence

The normal preflight sequence follows paging prompts on each CDU page.

The normal FMC power–up page is the identification page. Preflight flow continues in this sequence:

- identification (IDENT) page
- position initialization (POS INIT) page
- route (RTE) page
- DEPARTURES page (no automatic prompt)
- performance initialization (PERF INIT) page

[Option – FMC U10.1 and later]
- with U10.1 or later installed:
  - N1 LIMIT page
  - takeoff reference (TAKEOFF REF) page.

Some of these pages are also used in flight.

Copyright © The Boeing Company. See title page for details.

DO NOT USE FOR FLIGHT

Minimum Preflight Sequence

[Option – FMC U10.1 and later]

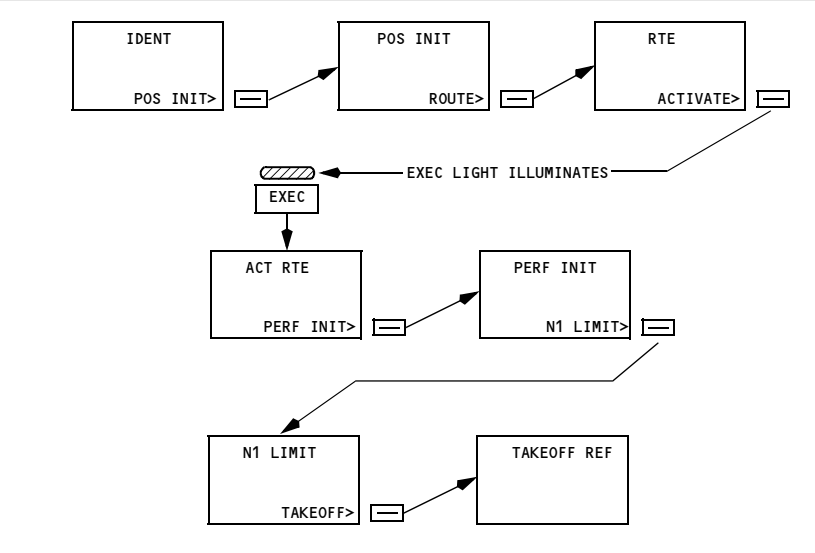

During preflight, a prompt in the lower right of the CDU page automatically directs the crew through the minimum requirements for preflight completion. Pushing the prompt key for the next page in the flow presents new entry requirements. Additional entries are made on pages to refine the performance and route calculations. If a required entry is missed, a prompt on the TAKEOFF page leads the crew to the preflight page that is missing data.

The airplane inertial position is required for FMC preflight and flight instrument operation.

A route must be entered and activated. The minimum route information is origin and destination airports and a route leg.

Performance information requires the airplane weight and cruising altitude.

Supplementary Pages

Supplementary pages are sometimes required. These pages must be manually selected. Manual selection interrupts the normal automatic sequence. Discussions of each normal page include methods to display the page when the automatic sequence is interrupted.

When the route includes SIDs and STARs, they can be entered into the preflight using the DEPARTURES or ARRIVALS pages.

Copyright © The Boeing Company. See title page for details.

Route discontinuities are removed, the route is modified, and speed/altitude restrictions are entered on the RTE LEGS page. The RTE LEGS page is described in the FMC Takeoff and Climb and FMC Cruise sections of this chapter.

[Option – With alternate destination prediction]
Alternate airports are added on the ALTERNATE DESTS page. The ALTERNATE DESTS page is described in the FMC Descent/Approach section of this chapter.

Waypoint, navigation, airport, and runway data is referenced on the REF NAV DATA page or the SUPP NAV DATA page. The REF NAV DATA page and SUPP NAV DATA page are described in the FMC Cruise section of this chapter.

VNAV performance is improved if the forecast winds and temperatures are entered during the preflight.

A single wind and temperature for cruise may be entered on the PERF INIT page. Wind and temperature data for specific cruise waypoints are entered on the RTE DATA page. The RTE DATA page is described in the FMC Cruise section. Wind and temperature for descent is entered on the DES FORECASTS page. The DES FORECASTS page is described in the FMC Descent section.

Copyright © The Boeing Company. See title page for details.

DO NOT USE FOR FLIGHT

Preflight Pages

The preflight pages are presented in the sequence used during a typical preflight.

Initialization/Reference Index Page

The initialization/reference index page provides manual selection of FMC pages. It provides access to pages used during preflight and not normally used in flight.

[Option – Without alternate destination prediction or message recall]

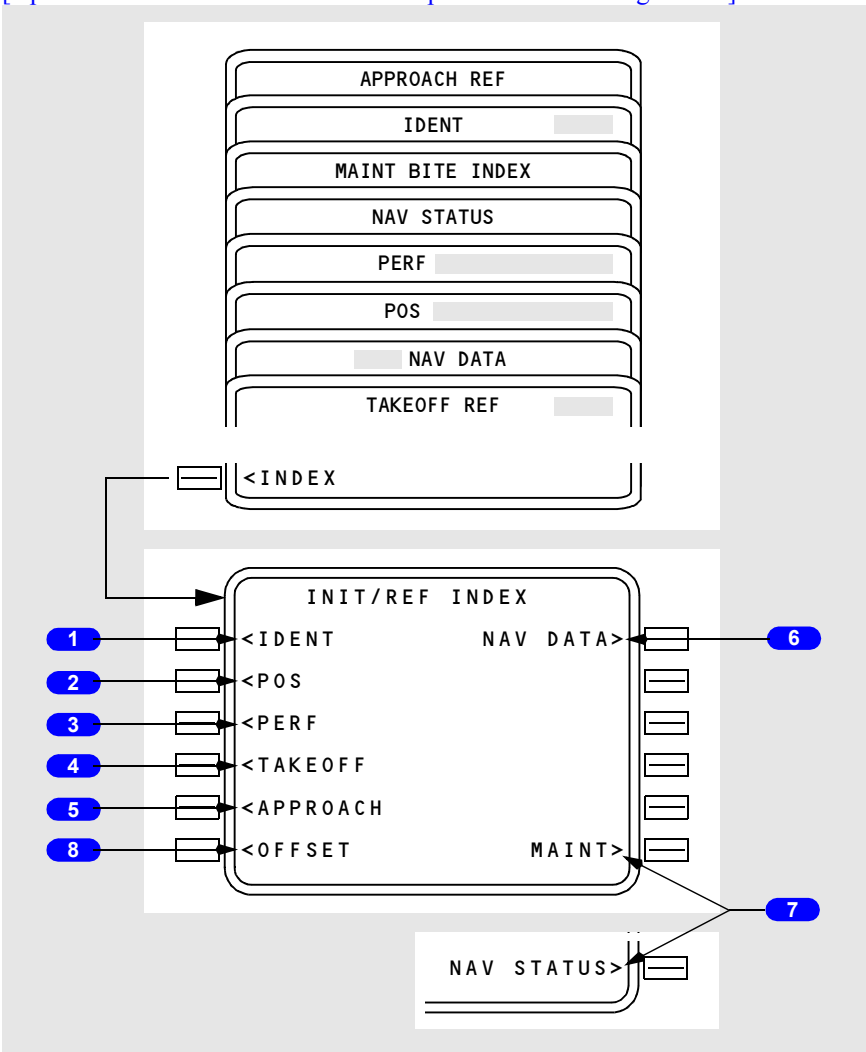

Copyright © The Boeing Company. See title page for details.

[Option – With alternate destination prediction and message recall]

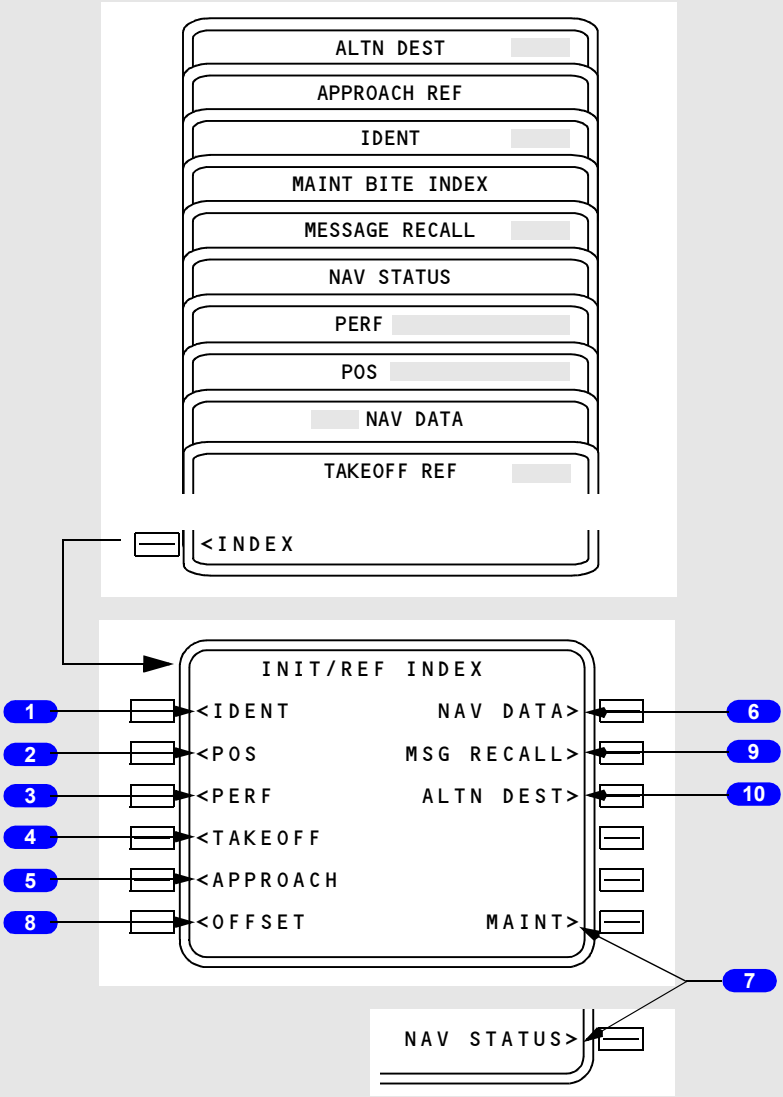

1 IDENT

Displays the IDENT page, the first page in the automatic preflight sequence.

Copyright © The Boeing Company. See title page for details.

DO NOT USE FOR FLIGHT

2 Position Initialization (POS)

- Displays the POS INIT page used for IRS initialization
- POS INIT page is also used to enter/update magnetic heading for an IRS which is in the ATT mode.

3 Performance Initialization (PERF)

Displays the PERF INIT page for initialization of data required for VNAV operations and performance predictions.

4 Takeoff Reference (TAKEOFF)

Displays the TAKEOFF REF page to enter takeoff reference information and V speeds.

5 APPROACH

Displays the APPROACH REF page for entry of the approach VREF speed.

6 Navigation Data (NAV DATA)

Displays the REF NAV DATA page to display information about waypoints, navaids, airports, and runways. On the ground, displays the SUPP NAV DATA page if SUPP is entered in the scratchpad prior to selection.

7 Maintenance (MAINT) or Navigation Status (NAV STATUS)

- MAINT – On ground only. Displays maintenance pages for maintenance use.
- NAV STATUS – Displays NAV STATUS page which shows status of navigation aids being tuned by the FMC. Replaces MAINT prompt when in air.

8 OFFSET

Displays the LATERAL OFFSET page for initiating a lateral offset.

9 Message Recall (MSG RECALL)
[Option – With message recall]

Displays the MESSAGE RECALL page to view active messages.

10 Alternate Destinations (ALTN DEST)
[Option – With alternate destination prediction]

Displays the ALTERNATE DESTS page used for alternate airport planning and diversions.

Copyright © The Boeing Company. See title page for details.

Identification Page

Most of the data on this page is for crew verification. Active date accepts manual entries.

The crew verifies FMC data and selects a navigation database on the identification page.

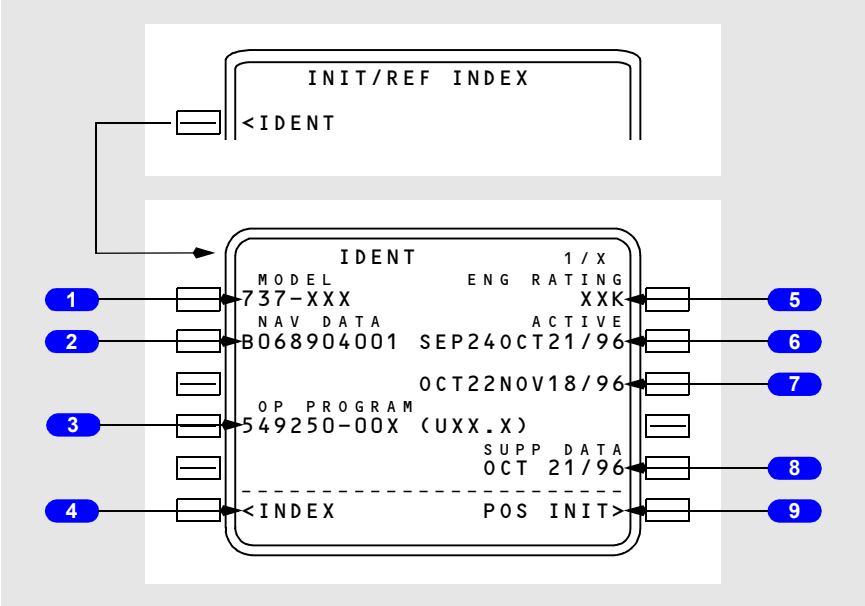

1 MODEL

Displays the airplane model from the FMC performance database (e.g., 737–600, 737–700, 737–800 or 737-900).

2 Navigation Data (NAV DATA)

Displays the navigation database identifier.

3 Operational Program (OP PROGRAM)

Displays the Boeing software part number and update version. Update version installed at delivery:

[Option – FMC U10.3]
- Update 10.3 (U10.3)

[Option – FMC U10.4]
- Update 10.4 (U10.4)

Copyright © The Boeing Company. See title page for details.

DO NOT USE FOR FLIGHT

[Option – FMC U10.4A]
- Update 10.4A (U10.4A)

[Option – FMC U10.5]
- Update 10.5 (U10.5)

4 INDEX

Push – displays the INIT/REF INDEX page.

5 Engine Rating (ENG RATING)

Displays the engine thrust stored in the FMC performance database (e.g., 20K, 22K, 24K, 26K or 27K).

6 ACTIVE Date Range

Displays the effectivity date range for the active navigation database.

Database activation is accomplished by pushing the proper date range prompt to copy that date into the scratchpad. The scratchpad date may then be transferred to the ACTIVE database line. The previous active date moves down to the inactive date line.

The ACTIVE label appears above the active navigation database date. No label appears above the inactive navigation database date. The navigation database date can be changed only on the ground. Changing the navigation database removes all previously entered route data.

When an active database expires in flight, the expired database continues to be used until the active date is changed after landing.

7 Inactive Date Range

Displays the effectivity date range for the inactive navigation database.

8 Supplemental Data (SUPP DATA)

Displays the effective date of supplemental data. Blank if supplemental database is empty.

9 Position Initialization (POS INIT)

Push – displays the POS INIT page.

Copyright © The Boeing Company. See title page for details.

Position Initialization Page 1/3

The position initialization page 1/3 allows airplane present position entry for IRS alignment and FMC initialization. The same page is used to enter/update the magnetic heading for an IRS which is in the ATT mode. There are three POS pages.

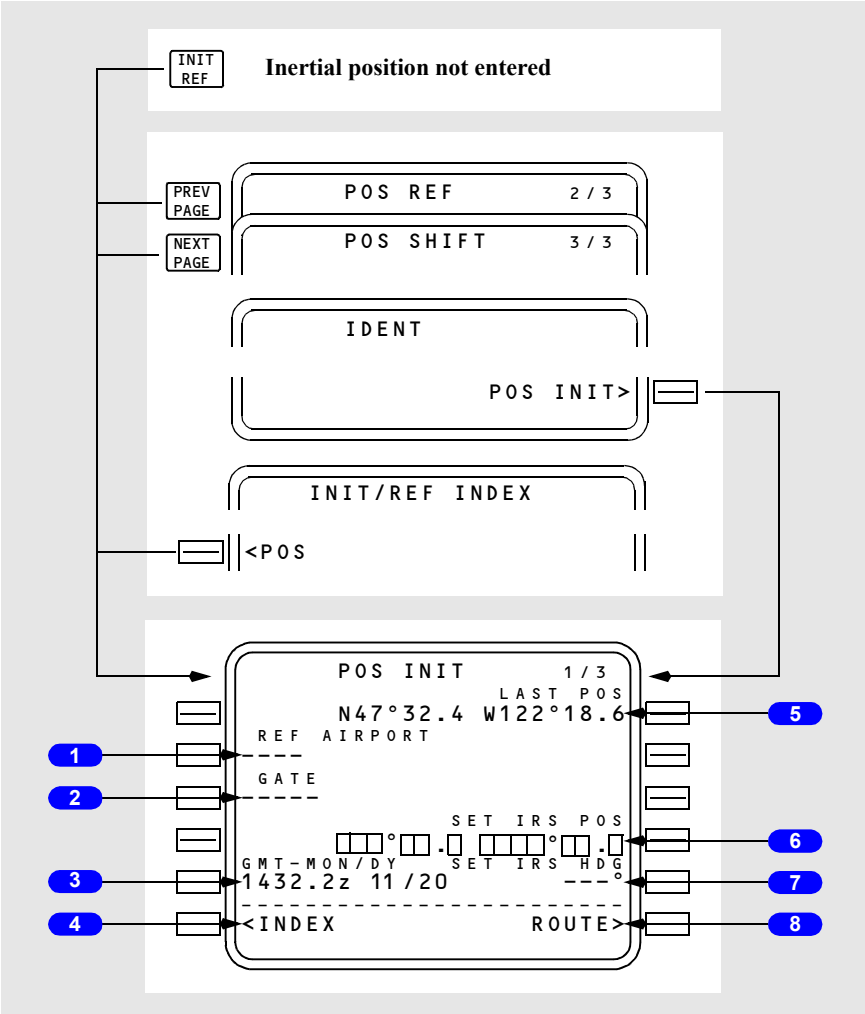

1 Reference Airport (REF AIRPORT)

The reference airport entry allows entry of the current airport for display of the airport latitude/longitude.

Optional entry.

Copyright © The Boeing Company. See title page for details.

DO NOT USE FOR FLIGHT

Valid entries are ICAO four letter airport identifiers.

Displays the latitude and longitude of the reference airport.

Removes previous GATE entry.

Entry blanks at lift–off.

2 GATE

The gate entry allows further refinement of the latitude/longitude position.

Optional entry after the reference airport is entered.

Valid entry is a gate number at the reference airport.

Displays the latitude and longitude of the reference airport gate from the navigation database.

Changes to dashes when a new reference airport is entered.

Entry blanks at lift–off.

3 GMT – Month/Day (GMT – MON/DY)

[Option – With GPS]
Displays GPS time and date. If the GPS time is not valid, GMT starts at 0000.0Z when the FMC is first powered. MON/DY is blank. Manually enter the correct GMT.

4 INDEX

Push – displays the INIT/REF INDEX page.

5 Last Position (LAST POS)

Displays the last FMC computed position.

6 Set IRS Position (SET IRS POS)

The set inertial position entry is required to initialize the IRS. Select the most accurate latitude/longitude for the initialization. A displayed latitude/longitude can be selected or a manual entry can be used.

If an entry is not made before the IRS finishes the initial alignment, the scratchpad message ENTER IRS POS is displayed.

Failure of the manually entered position to pass the IRS internal check displays the scratchpad message ENTER IRS POS.

Enter airplane position latitude and longitude.

Box prompts are displayed when either IRS is in the ALIGN mode and IRS present position has not been entered.

Copyright © The Boeing Company. See title page for details.

Blanks when the IRS transitions from the alignment to the navigation mode.

7 Set IRS Heading (SET IRS HDG)

Enter/update magnetic heading for any IRS which is in ATT mode. Line blanks when IRS not in ATT mode.

8 ROUTE

Push – displays the ROUTE page.

Copyright © The Boeing Company. See title page for details.

DO NOT USE FOR FLIGHT

Position Reference Page 2/3

[Option – With GPS]

Position reference page 2 displays the airplane positions as calculated by the FMC, IRS, GPS, and radio navigation receivers.

This page displays latitude/longitude. All position displays are in actual latitude and longitude, as calculated by the respective system. Ground speed is displayed for the FMC and each IRS.

[Option – With GPS]

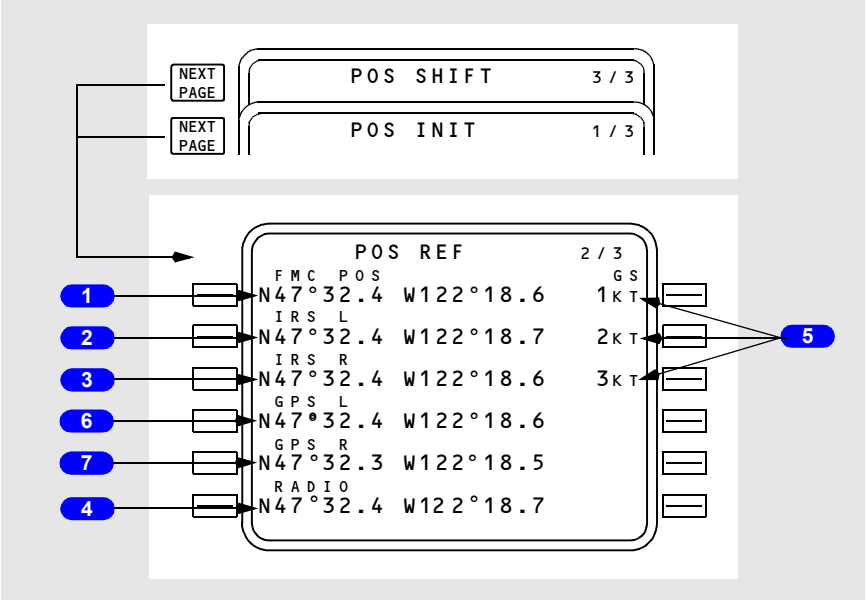

1 FMC Position (FMC POS)

Displays the FMC calculated latitude/longitude.

Blank if FMC position is invalid.

2 IRS L

Displays the latitude/longitude position as determined by the left IRS.

Blank if IRS position is invalid.

3 IRS R

Displays the latitude/longitude position as determined by the right IRS.

Blank if IRS position is invalid.

Copyright © The Boeing Company. See title page for details.

4 RADIO

Displays the latitude/longitude position as determined by the navigation radios.

Blank if on the ground or if radio position is invalid in flight.

5 Groundspeed (GS)

Displays the ground speed for FMC and IRS.

Blank if ground speed of related system is invalid.

6 GPS L
[Option – With GPS]

Displays the latitude/longitude position as determined by the left GPS.

Blank if GPS position is invalid.

7 GPS R
[Option – With GPS]

Displays the latitude/longitude position as determined by the right GPS.

Blank if GPS position is invalid.

Copyright © The Boeing Company. See title page for details.

DO NOT USE FOR FLIGHT

Route Page 1/X

The route is entered and displayed in air traffic control format.

[Option – FMC U10.3 and later]
The first route page displays origin and destination data. Route segments are displayed on subsequent route pages.

Individual portions of the route may be manually entered by the flight crew. An pre–defined route may be loaded using the CO ROUTE line. CO ROUTE entries must correspond to a company defined route in the navigation database.

[Option – With company data link]
The route may also be uplinked.

[Option – FMC U10.3 and later with flight number entry]

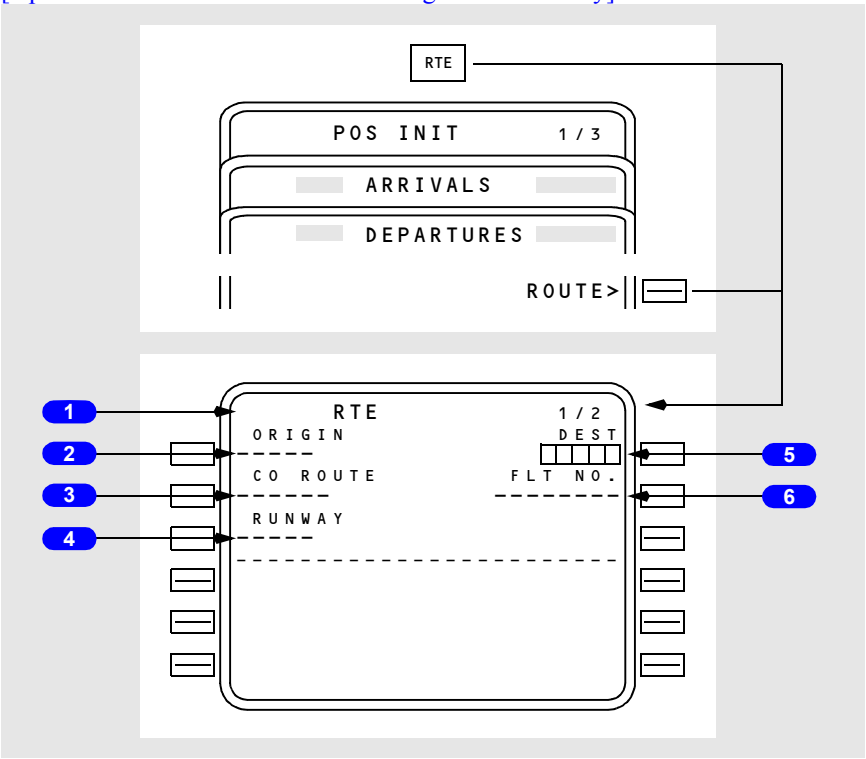

Copyright © The Boeing Company. See title page for details.

[Option – FMC U10.3 and later, with flight number entry and company data link]

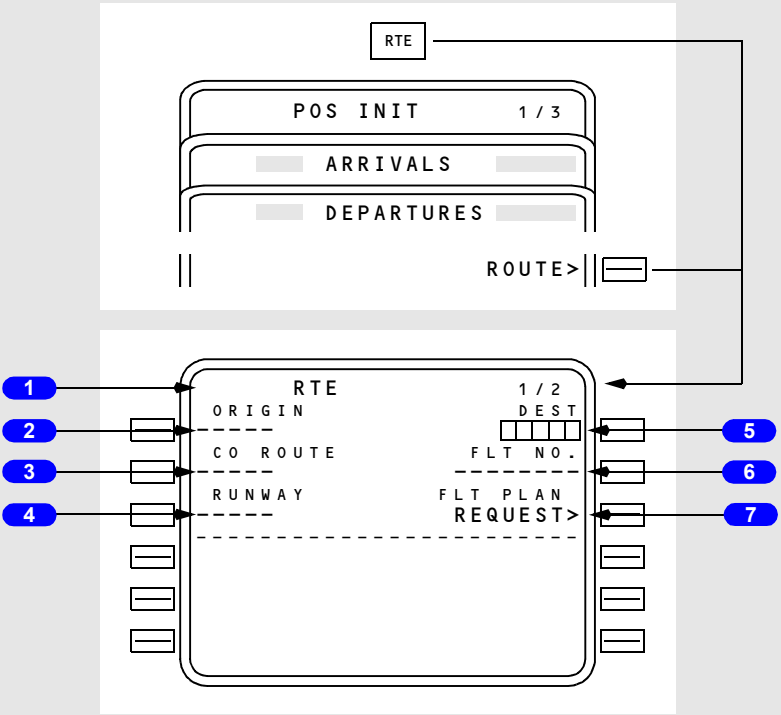

1 Page Title

The word ACT appears to the left of the title when the route has been activated and executed.

The word MOD appears to the left of the normal title when the route is modified and the change is not executed.

Multiple route pages are indicated by the page sequence number to the right of the title.

2 ORIGIN

Enter the ICAO airport identifier for the origin.

An entry is required for route activation.

Valid entries must be in the navigation database.

[Option – FMC U10.3 and later]
Entry is allowed for all phases of flight. Entry of a new origin erases the previous route.

Copyright © The Boeing Company. See title page for details.

DO NOT USE FOR FLIGHT

New entries on an active route display MOD in the route title.

Enables direct selection of departure and arrival procedures for the origin airport.

Automatically entered as part of a company route.

3 Company Route (CO ROUTE)

A company route can be called from the navigation database by entering the route identifier. The data provided with a company route can include origin and destination airports, departure runway, SID, and STAR, and the route of flight. All company route data is automatically entered when the route identifier is entered.

An entry is optional for activation of the route.

Enter a company route identifier.

Valid entry is any crew entered company route name. If the name is not contained in the NAV database, the scratchpad message NOT IN DATA BASE is displayed.

Entry of a new company route replaces the previous route.

Inflight entry is inhibited for the active route.

4 RUNWAY

Line title does not display until after entry of origin airport.

Enter the desired runway for the origin airport.

An entry is optional for activation of the route.

Entries must be in the navigation database.

New entries on an active route display MOD in the route title.

Can be entered from the DEPARTURES page.

Deleted upon reaching the first waypoint.

5 Destination (DEST)

Enter the ICAO airport identifier for the destination of the route.

An entry is required for route activation.

Entries must be in the navigation database.

New entries on an active route display MOD in the route title.

Enables direct selection of arrival procedures for the destination airport.

Automatically entered as part of a company route.

Entry and execution of a new destination clears any runway and runway dependent approach procedure of the previous destination. If the active leg is part of the affected procedure, then all subsequent (inactive) legs are cleared.

Copyright © The Boeing Company. See title page for details.

6 Flight Number (FLT NO.)
[Option – With flight number entry]

Enter the company flight number.

Entry is optional for activation of the route.

Limited to 8 characters.

Crew entered.

Flight number is included in the PROGRESS page title.

7 FLT PLAN REQUEST
[Option – With company data link]

Push – transmits a data link request for a flight plan route uplink

Copyright © The Boeing Company. See title page for details.

DO NOT USE FOR FLIGHT

Route Pages 1/X and 2/X with Data Entries
[Option – FMC U10.3 and later]

[Option – With flight number entry]

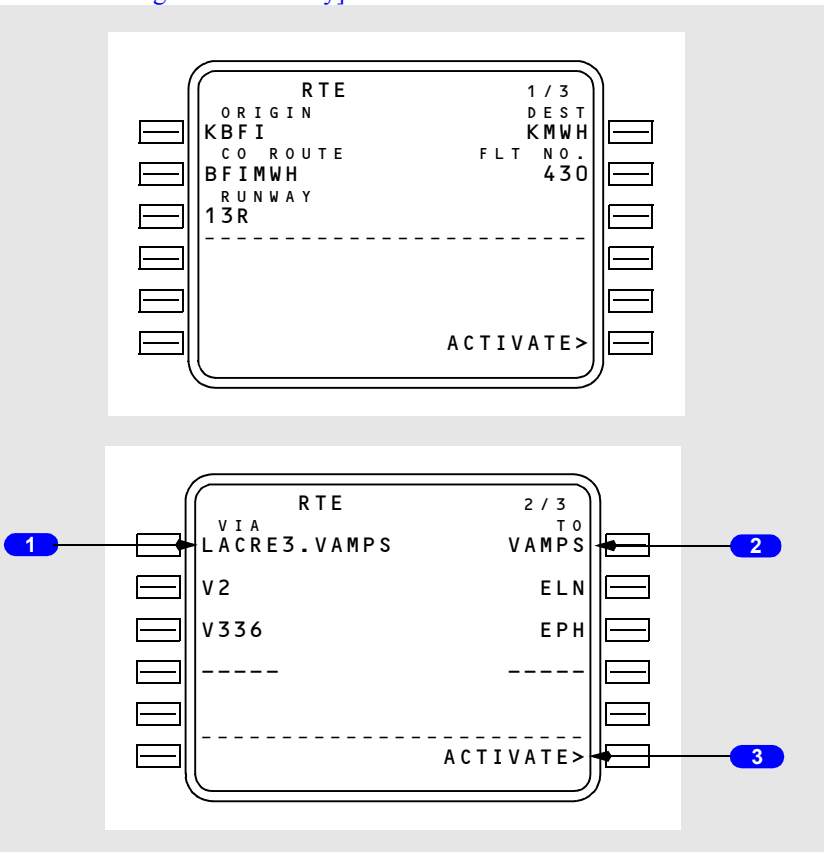

Copyright © The Boeing Company. See title page for details.

[Option – With flight number entry and company data link]

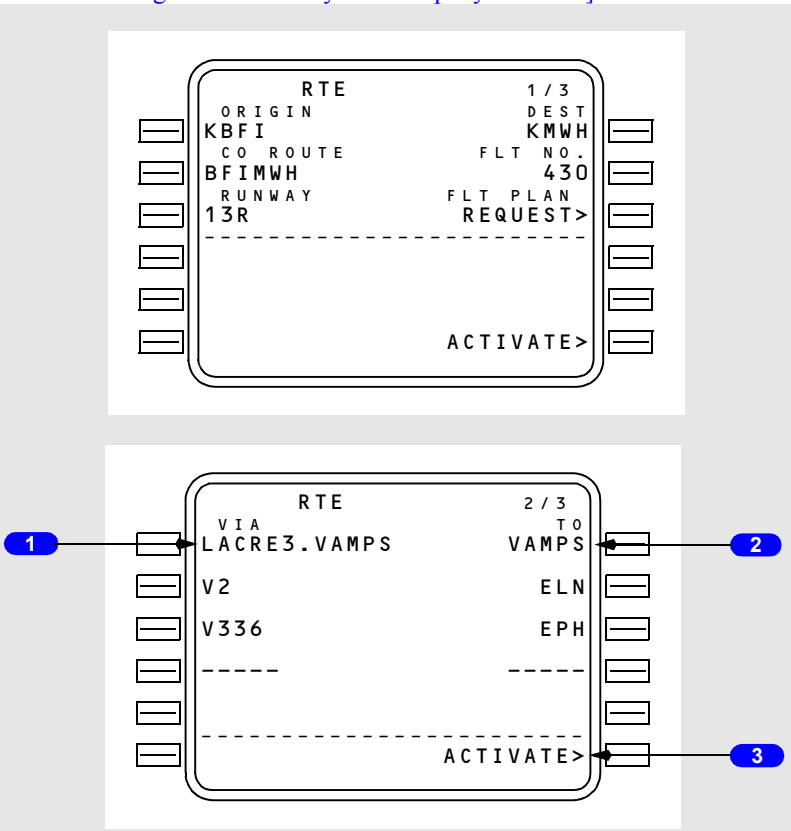

1 VIA

The VIA column displays the route segment to the waypoint or termination displayed in the TO column. Enter the path which describes the route segment between the previous waypoint and the segment termination.

Enter an airway in the VIA column and box prompts are displayed in the TO column if the previous TO line contains a waypoint on the airway.

Valid entries can also include procedures or DIRECT. Procedures are normally entered through selections on DEPARTURES and ARRIVALS pages. DIRECT is normally entered as a result of entering a TO waypoint first.

Valid airways must:

- contain the fix entered in the TO waypoint, and
- contain the previous TO waypoint, or

Dashed prompts change to DIRECT if the TO waypoint is entered first.

Copyright © The Boeing Company. See title page for details.

DO NOT USE FOR FLIGHT

Dash prompts appear for the first VIA beyond the end of the route.

Invalid VIA entries display the scratchpad entry INVALID ENTRY.

Invalid VIA entries are:

- airways and company routes which do not contain the TO waypoint of the previous line
- airways or company routes that are not in the navigation database.

When entering airways, the beginning and ending waypoints determine if the entry is valid. The route segment must contain the waypoint entered in the TO position. The TO waypoint of the previous route segment must be the same as the beginning point of the current route segment, or a route discontinuity is created between the segments.

Entry of a SID or transition automatically enters the VIA and TO data for the route segments of the SID. A SID automatically links to the next route segment when the final SID waypoint is part of the route segment.

LACRE3.VAMPS is an example of a SID selection made on the DEPARTURES page.

V2 is an example of airway entry.

2 TO

Enter the end point of the route segment specified by the VIA entry.

Entry of a waypoint in the TO column without first entering a VIA airway displays DIRECT in the VIA column.

Box prompts indicate that an entry is required.

Valid waypoint entries for a DIRECT route segment are any valid waypoint, fix, navaid, airport, or runway.

Valid waypoint entries for airways are waypoints or fixes on the airway.

Dash prompts appear on the first TO waypoint following the end of the route.

3 ACTIVATE

Pushing the ACTIVATE key arms the route for execution as the active route. When the EXEC key is pushed, the route becomes the active route and the ACTIVATE prompt is replaced with the next required preflight page prompt.

Push – prepares the selected route for execution as the active route.

Activation of a route is required for completion of the preflight.

Displayed on inactive route pages.

Copyright © The Boeing Company. See title page for details.

After route activation, the ACTIVATE prompt is replaced by:

- PERF INIT, when the required performance data is incomplete, or
- TAKEOFF when the required performance data is complete.

Additional Route Page Prompts for an Activated Route

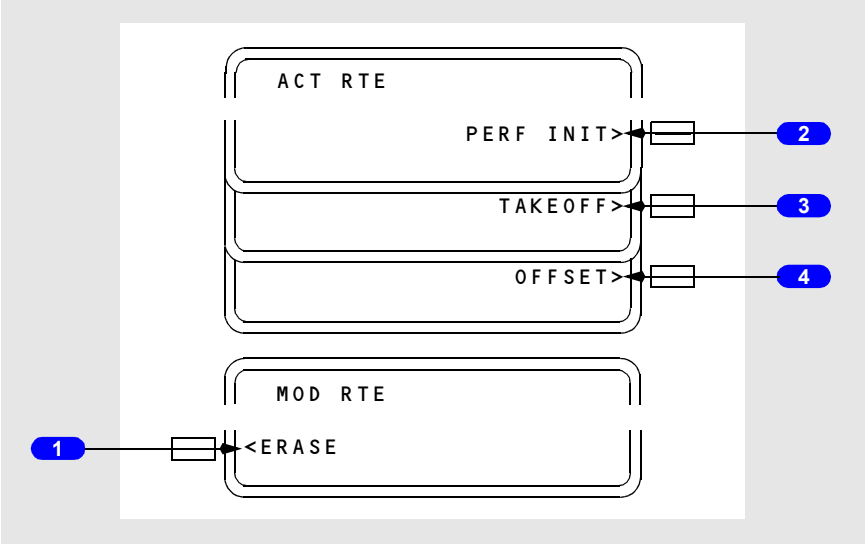

[Option – With alternate destination prediction]

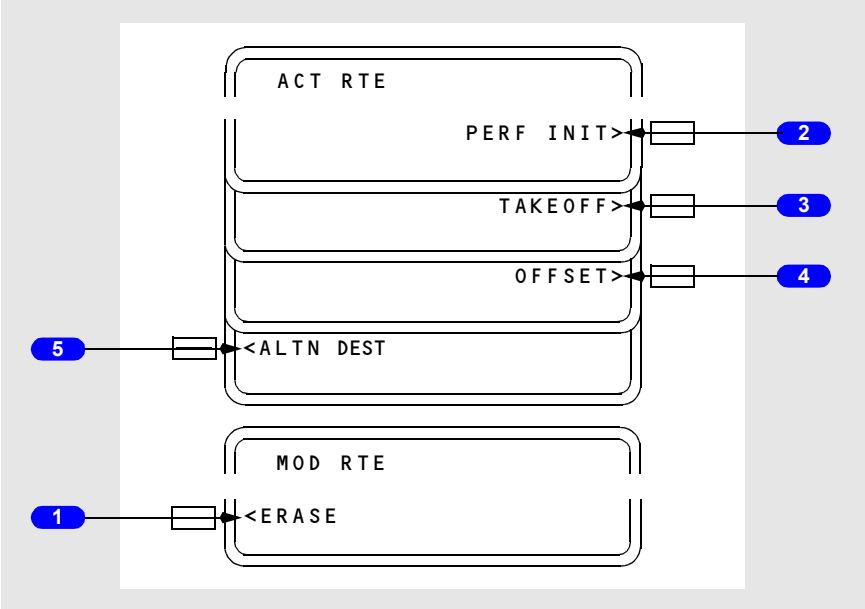

Copyright © The Boeing Company. See title page for details.

DO NOT USE FOR FLIGHT

1 ERASE

Push – removes all pending modifications.

Displayed only during modifications.

2 Performance Initialization (PERF INIT)

Push – displays PERF INIT page.

Displayed only on the ground when required entries on the PERF INIT page are incomplete.

3 TAKEOFF

Push – displays TAKEOFF REF page 1/2.

Displayed only on the ground when all required entries on the PERF INIT page are complete.

4 OFFSET

Push – displays LATERAL OFFSET page.

Displayed only in flight.

5 Alternate Destination (ALTN DEST)
[Option – With alternate destination prediction]

Push – displays ALTERNATE DESTS page 1/6.

Copyright © The Boeing Company. See title page for details.

Departure/Arrival Index Page

The departure and arrival index page is used to select the departure or arrival page for the origin and destination airports for each route. The index also allows reference to departure or arrival information for any other airport in the navigation database.

Departure and arrival prompts are available for the origin airport. Destination airports have only arrival prompts.

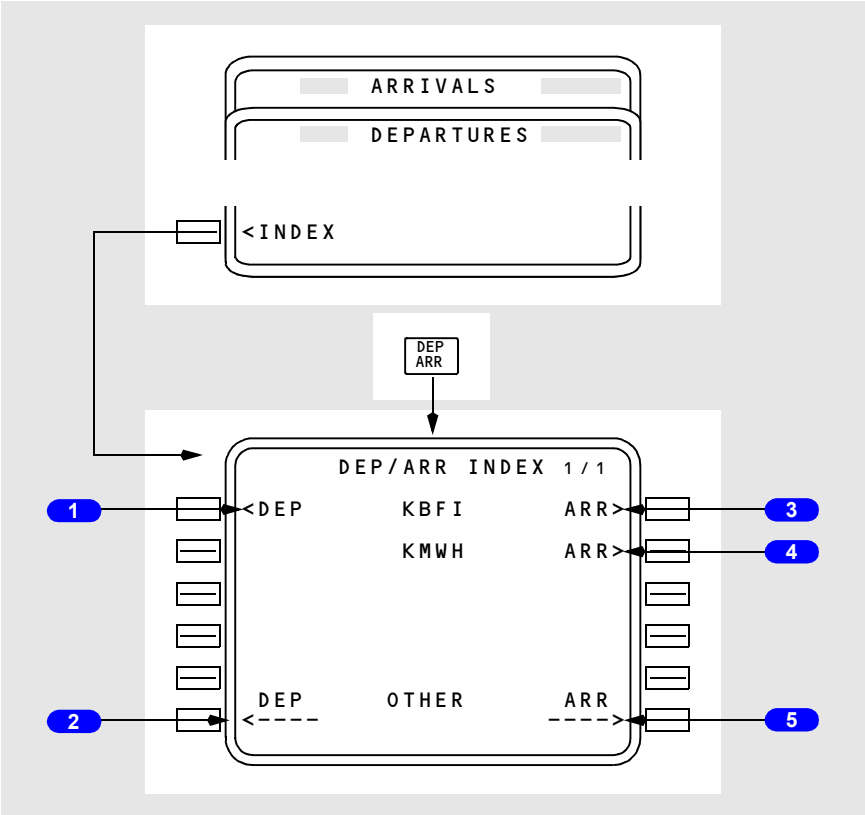

1 Departure (DEP) – Origin

Push – displays the departure page for origin airport.

2 Departure (DEP) – OTHER

Displays the departure page for the airport entered into this line through the scratchpad.

Copyright © The Boeing Company. See title page for details.

DO NOT USE FOR FLIGHT

DEP prompt for OTHER allows display of departure information about airports that are not an origin or destination. The displayed information can be viewed but cannot be selected, because the airport is not on the route.

3 Arrival (ARR) – Origin

Push – displays the arrival page for origin airport. Origin airport arrivals selection is used during a turn–back situation.

4 Arrival (ARR) – Destination

Push – displays the arrival page for destination airport.

5 Arrival (ARR) – OTHER

Displays the arrival page for the airport entered into this line through the scratchpad.

ARR prompt for OTHER allows display of arrival information about airports that are not an origin or destination. The displayed information can be viewed but cannot be selected, because the airport is not on the route.

Copyright © The Boeing Company. See title page for details.

Departures Page

The departures page is used to select the departure runway, SID, and transition for the route origin airport.

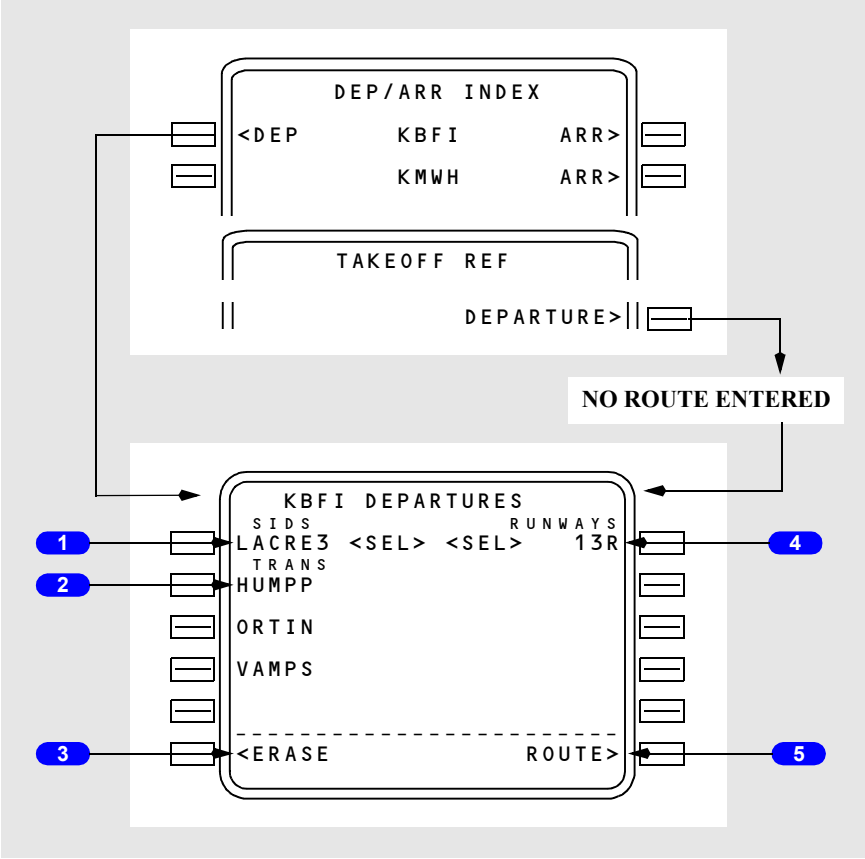

1 Standard Instrument Departures (SIDS)

Displays SIDS for the airport and runway selections.

[Option – With engine out SIDS]
Displays the engine–out SIDS for the airport and runway selections following the last SID display line or on the first line if there are no SIDS for the departure airport and runway.

Without the selection of a runway on the RTE page, the initial display contains all of the information for the airport runways and SIDS. As selections are made, incompatible options are removed. SID transitions are displayed after a SID is selected.

Copyright © The Boeing Company. See title page for details.

DO NOT USE FOR FLIGHT

2 Transitions (TRANS)

Displays transitions compatible with the selected SID.

3 ERASE/INDEX

Erase is displayed when a route modification is pending. INDEX is displayed when no route modification is pending.

ERASE push – removes route modifications that are not executed and restores the original route.

INDEX push – displays the DEP/ARR INDEX page.

4 RUNWAYS

Displays a list of runways for the selected airport.

The runway selected on the RTE page is displayed as <SEL> or <ACT> when this page is displayed.

5 ROUTE

Push – displays the RTE page.

Selecting Options

Selecting an option displays <SEL> inboard of the option, and a route modification is created. When the modification is executed, the <SEL> becomes <ACT>. Leaving the page and returning displays all options and the <SEL> or <ACT> prompts.

Copyright © The Boeing Company. See title page for details.

Performance Initialization Page

The performance initialization page allows the entry of airplane and route data to initialize performance calculations. This information is required for VNAV calculations.

[Option – FMC U10.1 and later]

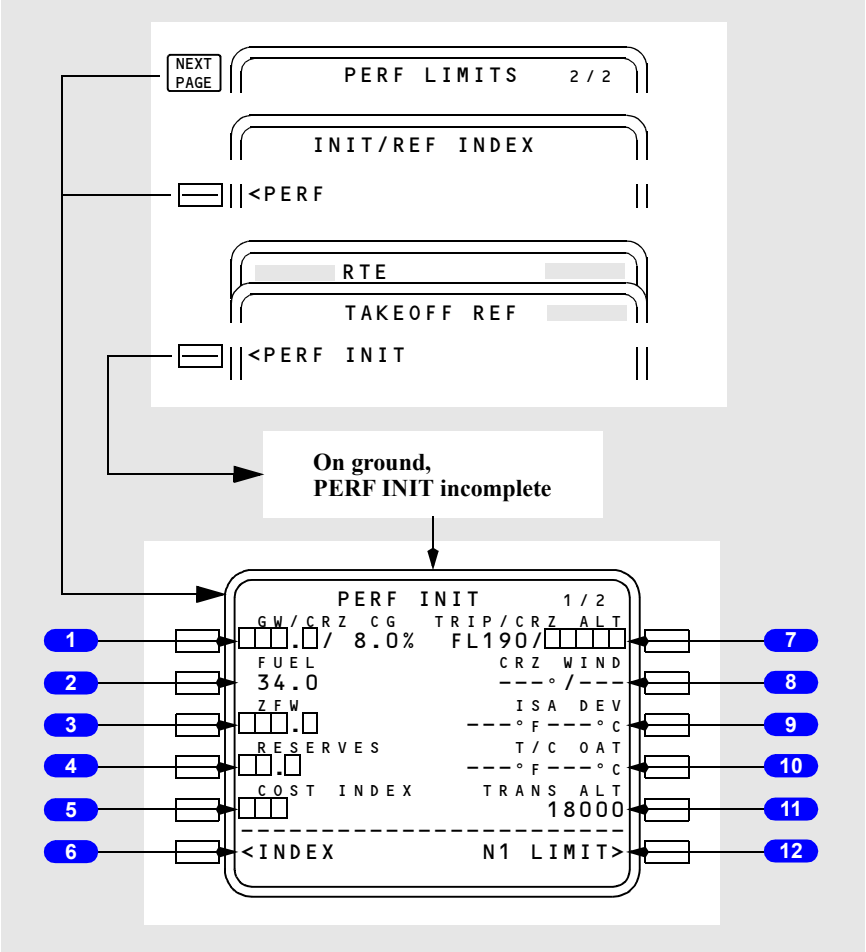

Copyright © The Boeing Company. See title page for details.

DO NOT USE FOR FLIGHT

[Option – FMC U10.1 and later, with PLAN FUEL line]

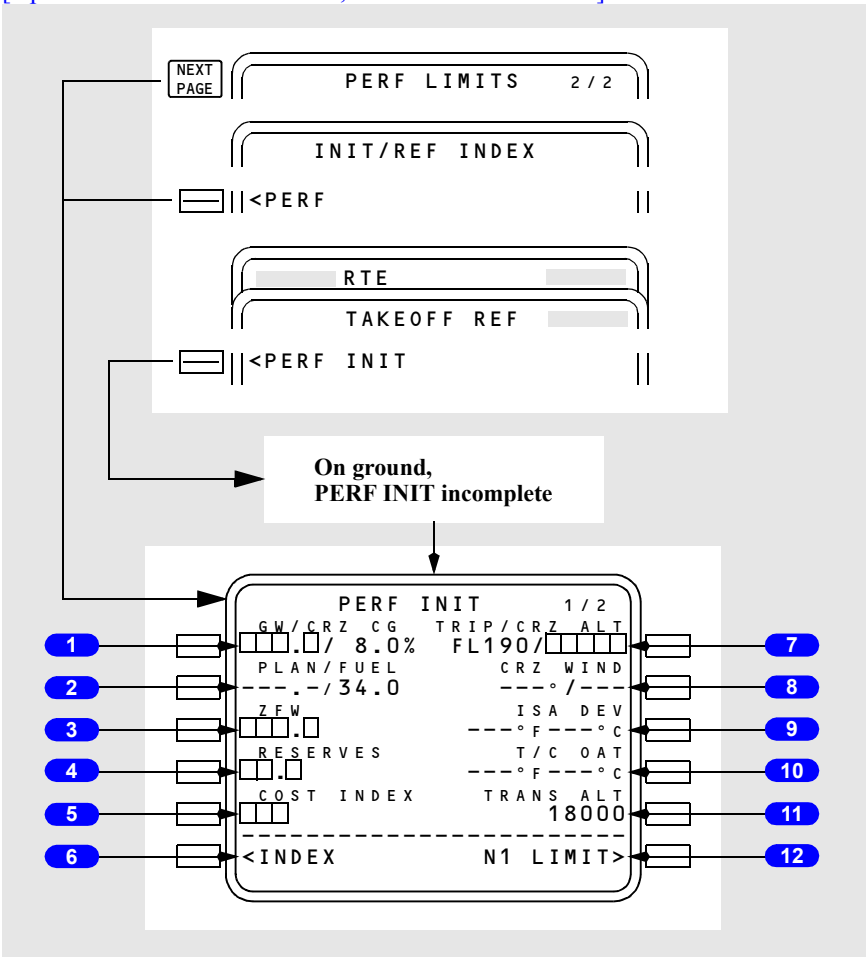

Copyright © The Boeing Company. See title page for details.

[Option – FMC U10.1 and later, with company data link and PLAN FUEL line]

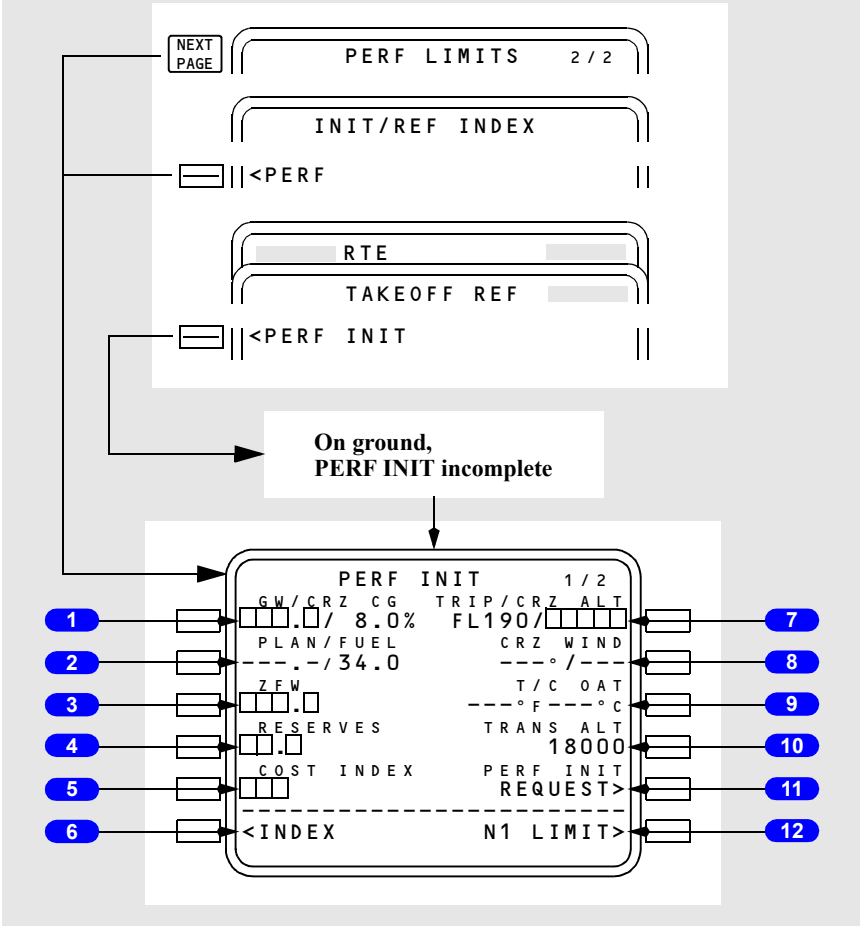

1 Gross Weight/Cruise Center of Gravity (GW/ CRZ CG)

Airplane gross weight is required. The entry can be made by the flight crew or automatically calculated by the FMC, following entry of zero fuel weight.

Enter airplane gross weight.

Valid entries are xxx or xxx.x.

Automatically displays calculated weight when zero fuel weight is entered first.

Displays default or manually entered cruise CG. Entry of actual cruise CG may increase maximum altitude capability.

Copyright © The Boeing Company. See title page for details.

DO NOT USE FOR FLIGHT

2 FUEL

Fuel on board is automatically displayed as received from the airplane fuel quantity indication system.

In flight, when the FMC is not receiving the required fuel data, displays dashes and manual fuel weight entry is possible. After manual entry, MAN (manual) shows by the fuel weight. After manual entry, periodic update of the fuel weight is required for the remainder of the flight to keep gross weight current.

2 PLAN/FUEL
[Option – With PLAN FUEL line]

Fuel on board is automatically displayed as received from the airplane fuel quantity indication system.

[Option – FMC U10.3 and later]
PLAN entry allows fuel predictions before actual fuel is known. Entry is blanked with flaps extended or in flight.

In flight, when the FMC is not receiving the required fuel data, displays dashes and manual fuel weight entry is possible. After manual entry, MAN (manual) shows by the fuel weight. After manual entry, periodic update of the fuel weight is required for the remainder of the flight to keep gross weight current.

3 Zero Fuel Weight (ZFW)

Airplane zero fuel weight is required. Normally the ZFW is entered from the airplane dispatch papers and the FMC calculates the airplane gross weight.

Enter the airplane zero fuel weight.

Valid entry is xxx or xxx.x.

Calculated zero fuel weight is automatically displayed if airplane gross weight is entered first and fuel on board is valid.

4 RESERVES

Enter fuel reserves for the route.

Entry is required to complete the preflight.

Valid entry is xx or xx.x.

5 COST INDEX

The cost index is used to calculate ECON climb and cruise speeds. The value reflects the relative impacts on overall trip cost of fuel cost as compared to other direct hourly operating costs.

Enter the cost index for ECON calculations.

Copyright © The Boeing Company. See title page for details.

Entry is required to enable use of VNAV mode.

Valid entries are 0 to 500. 0 causes the ECON speed to be MAX RANGE; 500 results in a minimum time flight.

Entry of a company route on RTE page causes any company stored value of cost index to be automatically displayed. A manual entry has priority.

6 INDEX

Push – displays the INIT/REF INDEX page.

7 Trip/Cruise Altitude (TRIP/CRZ ALT)

Trip altitude is automatically computed and displayed whenever entries have been made for the ORIGIN, DEST, GROSS WT, and COST INDEX. Otherwise, the field is blank.

Trip altitude is the predicted minimum cost altitude determined by operator constraints. Provides crew a reference for selecting a planned cruise altitude.

Cruise altitude is required.

Enter the cruise altitude for the route.

Automatically displays this cruise altitude on the CLB, CRZ, and RTE Legs pages.

8 Cruise Wind (CRZ WIND)

Cruise wind entry provides input to optimize FMC calculations.

Enter the forecast cruise wind.

Entry is propagated onto the RTE DATA page.

If no entry made, the FMC assumes zero wind for preflight predictions.

9 ISA Deviation (ISA DEV)

ISA deviation entry provides input to optimize FMC calculations.

Entry causes T/C OAT to be computed and displayed.

Enter ISA deviation for top of climb altitude.

If no entry made, FMC assumes zero deviation.

9 Top of Climb Outside Air Temperature (T/C OAT) [Option – With company data link]

T/C OAT entry provides input to optimize FMC calculations.

Entry causes ISA DEV to be computed and displayed.

Copyright © The Boeing Company. See title page for details.

DO NOT USE FOR FLIGHT

Enter top of climb OAT.

If no entry made, FMC assumes ISA value.

10 Top of Climb Outside Air Temperature (T/C OAT)

T/C OAT entry provides input to optimize FMC calculations.

Entry causes ISA DEV to be computed and displayed.

Enter top of climb OAT.

If no entry made, FMC assumes ISA value.

10 Transition Altitude (TRANS ALT)
[Option – With company data link]

Displays 18,000 feet at FMC power up.

Changes automatically after selecting a departure procedure with a different transition altitude.

Manual entry has priority.

11 Transition Altitude (TRANS ALT)

Displays 18,000 feet at FMC power up.

Changes automatically after selecting a departure procedure with a different transition altitude.

Manual entry has priority.

11 PERF INIT REQUEST
[Option – With company data link]

Push – transmits a data link request for a PERF INIT uplink

12 N1 LIMIT
[Option – FMC U10.1 and later]

Push – displays the N1 LIMIT page.

Copyright © The Boeing Company. See title page for details.

Performance Limits Page

The performance limits page allows the entry of performance limits affecting RTA and ECON calculations.

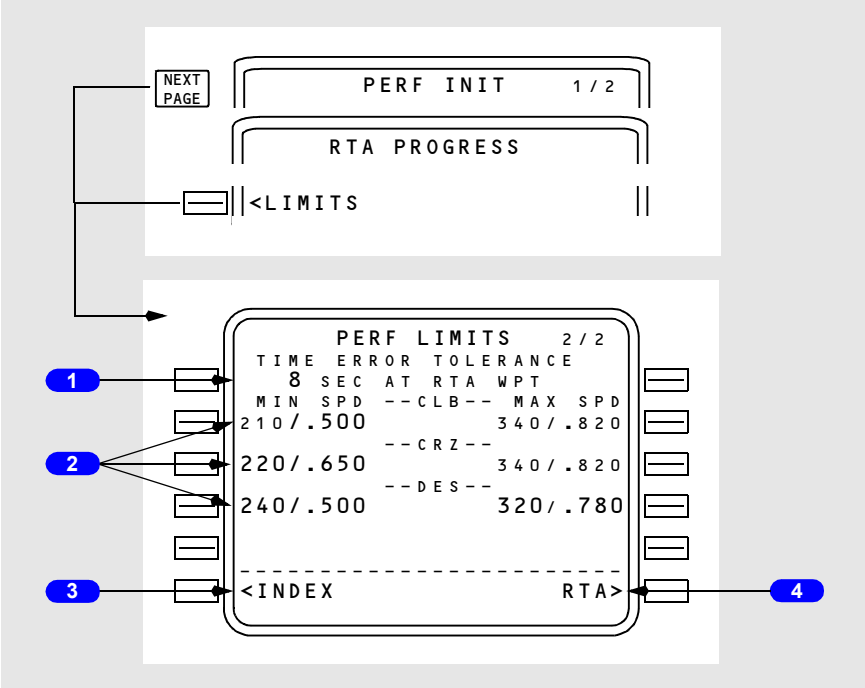

Copyright © The Boeing Company. See title page for details.

DO NOT USE FOR FLIGHT

[Option – With company data link]

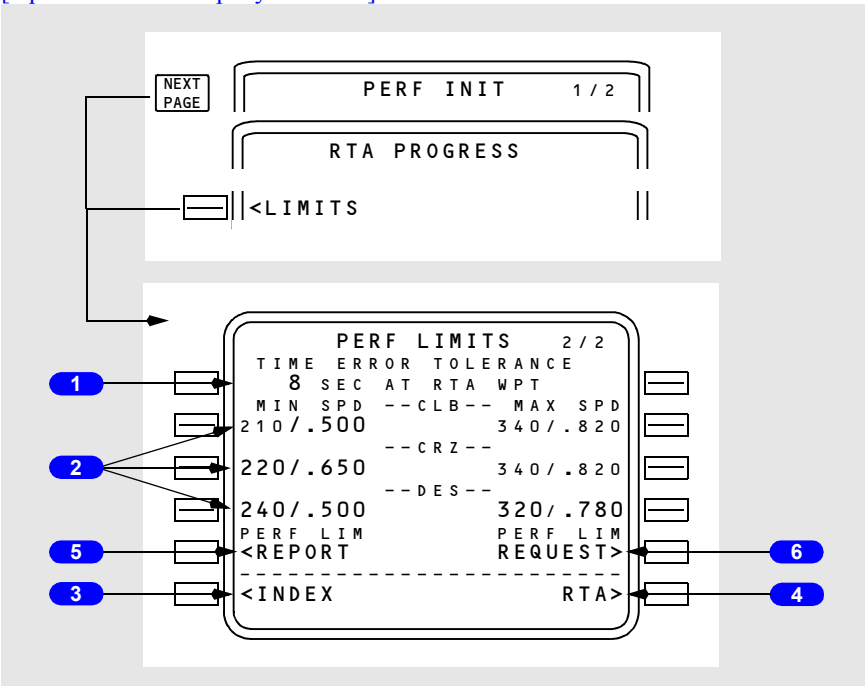

1 TIME ERROR TOLERANCE

Used during RTA calculations to establish a boundary on computed speeds.

Valid entry range is from 5 to 30 seconds.

Default value is 30 seconds and is displayed in small font.

2 Minimum Speed/Maximum Speed (MIN SPD/MAX SPD)

Establishes lower and upper speed limits for each phase of flight.

Default is 210/.40 for lower limit and 340/.820 for upper limit. Displayed in small font.

Either CAS or Mach can be entered.

Limits both RTA and ECON modes in flight.

3 INDEX

Push – selects INIT /REF INDEX page.

4 Required Time of Arrival (RTA)

Push – selects RTA PROGRESS page.

Copyright © The Boeing Company. See title page for details.

5 PERF LIM REPORT
[Option – With company data link]

Push – transmits displayed performance limits to ground station.

6 PERF LIM REQUEST
[Option – With company data link]

Push – transmits a data link request for a performance limits uplink.

Copyright © The Boeing Company. See title page for details.

DO NOT USE FOR FLIGHT

N1 LIMIT Page - Preflight

[Option – FMC U10.1 and later]

This section describes the preflight version of the N1 LIMIT page. See the FMC Takeoff and Climb section for a description of the in–flight version of the N1 LIMIT page.

The N1 LIMIT page is used during preflight to manage takeoff and climb thrust. Temperature data is entered, allowing the FMC to make N1 computations for normal or reduced thrust takeoff. Fixed takeoff and climb thrust derates may be selected.

[Option – Takeoff bump thrust]
The N1 LIMIT page is also used to select a takeoff bump thrust setting to meet extra thrust requirements for takeoff at certain airports.

[Option – Aspirated TAT, with takeoff bump thrust]

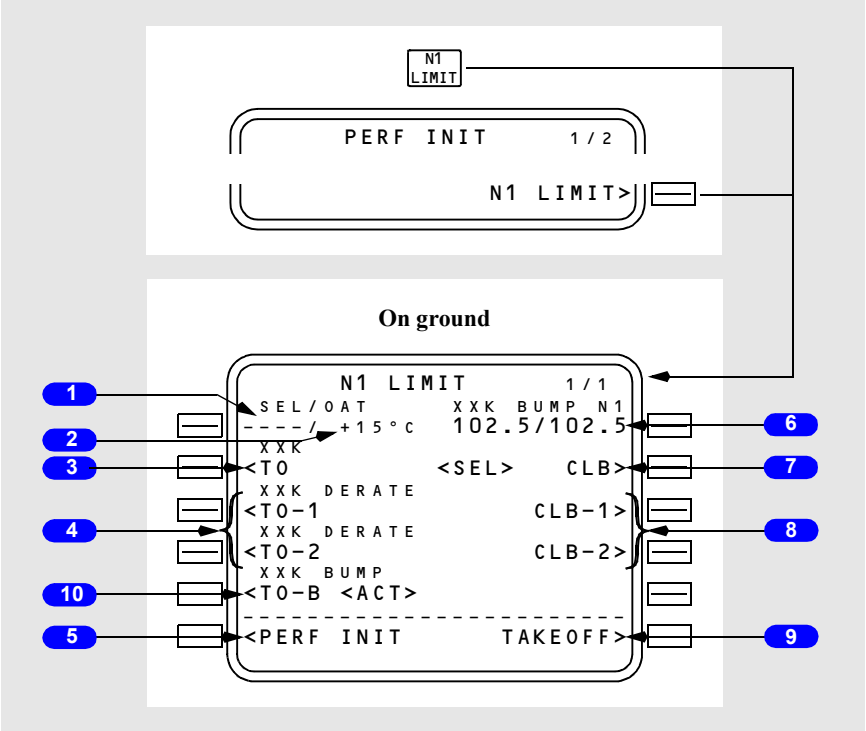

Copyright © The Boeing Company. See title page for details.

[Option – Non–aspirated TAT, with takeoff bump thrust]

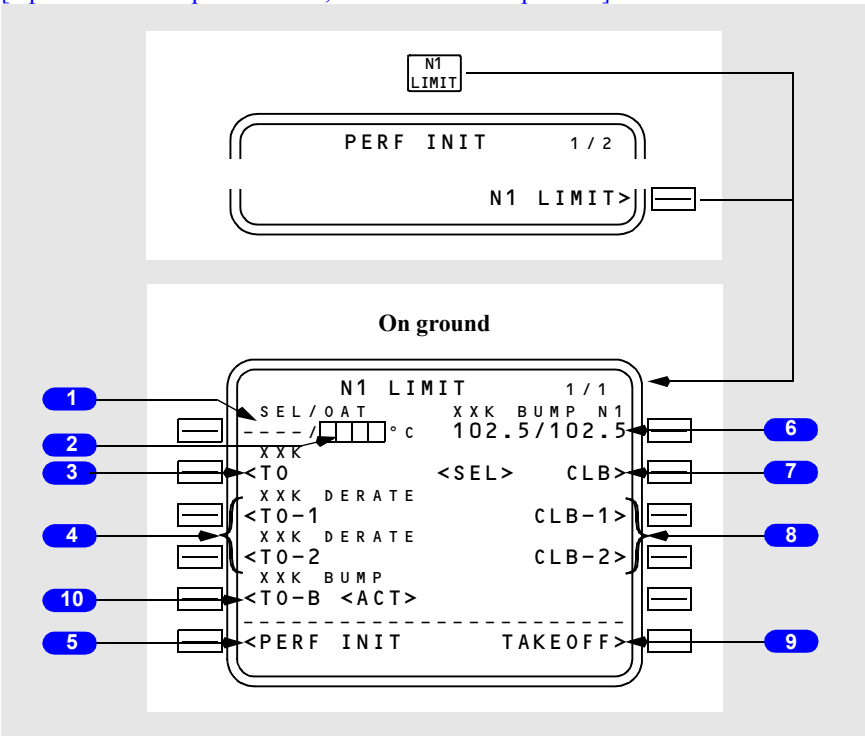

Copyright © The Boeing Company. See title page for details.

DO NOT USE FOR FLIGHT

[Option – Aspirated TAT]

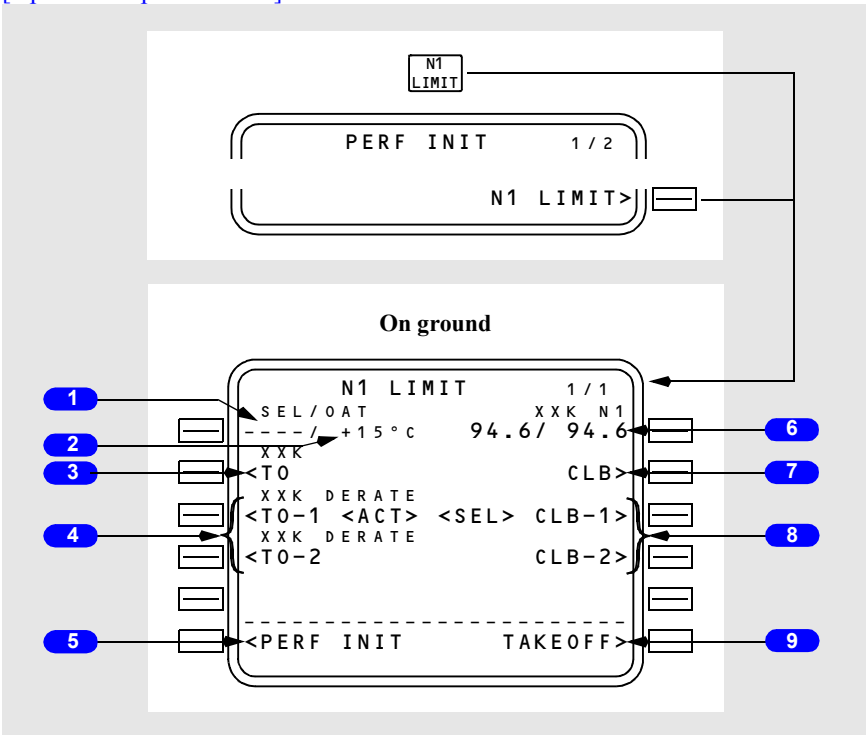

1 Selected Temperature (SEL)

Entry of an assumed temperature calculates a reduced thrust takeoff N1.

Entry can be made in degrees C or degrees F.

Maximum allowable entry is 70 degrees C (158 degrees F). The FMC, however, will limit the N1 to 25% takeoff reduction.

2 Outside Air Temperature (OAT)
[Option – Aspirated TAT]

Aspirated TAT displays the sensed OAT in small–size characters. Manual entry of actual takeoff OAT is displayed in large–sized characters.

Sensed or manually entered OAT is used by the FMC to calculate the takeoff N1 limits.

Entry can be made in degrees C or degrees F.

Copyright © The Boeing Company. See title page for details.

2 Outside Air Temperature (OAT)
[Option – Non–aspirated TAT]

Manual entry of actual takeoff OAT is displayed in large–sized characters and is used by the FMC to calculate the takeoff N1 limits.

Entry can be made in degrees C or degrees F.

3 Takeoff Thrust Limit (TO XXK)

Push – selects full rated takeoff thrust limit.

Selection of TO automatically selects CLB thrust.

Data line title displays full rated thrust. Typical line titles display as “24K” or “22K.”

Selection of a new rating after V speeds are selected on the TAKEOFF REF page causes the V speeds to display in small font, and the NO VSPD flag to show on the airspeed indication.

4 Takeoff Derates (TO–1 and TO–2)

Push – selects the associated takeoff thrust limit.

[Option – With company data link]
Takeoff data uplink may automatically select a thrust derate.

Data line title displays the associated reduced thrust rating. Typical line titles display as “22K DERATE” or “20K DERATE”

Normally, selecting TO–1 automatically arms CLB–1 and selecting TO–2 automatically arms CLB–2.

Note: If a reduced thrust takeoff has been specified, then either CLB–1 or CLB–2 may be automatically specified if required to avoid a climb N1 value greater than the specified reduced thrust takeoff N1.

Selection of a new rating after V speeds are selected on the TAKEOFF REF page causes the V speeds to display in small font, and the NO VSPD flag to show on the airspeed indication.

5 PERF INIT

Push – displays the PERF INIT page.

6 Takeoff N1 (XXK N1)

Displays the FMC computed N1 for takeoff

Data line title displays full rated thrust or selected takeoff derate thrust. Typical line titles display as “24K N1” or “22K N1”

Copyright © The Boeing Company. See title page for details.

DO NOT USE FOR FLIGHT

Data line title changes to RED XXK N1 when an assumed temperature (SEL TEMP) entry results in a reduced N1 value. If a SEL TEMP and a DERATE are both selected the data line title will change to "RED XXK N1," and the effect on thrust will be additive. The Reference N1 bugs will still display full rated or selected takeoff derate thrust N1 values.

[Option – Takeoff bump thrust]
Data line title changes to XXK BUMP N1 when takeoff bump thrust is selected.

7 Climb (CLB)

Push – selects full rated climb thrust limit.

[Option – Automatic takeoff thrust reduction]
Climb thrust is automatically selected at the thrust reduction point on the TAKEOFF REF page 2.

8 Reduced Climb (CLB–1 and CLB–2)

Push – selects the associated reduced thrust climb mode.

CLB–1 provides a climb limit reduced by 3% N1 (approximately 10% thrust). CLB–2 provides a climb limit reduced by 6% N1 (approximately 20% thrust).

Deletion results in the selection of CLB thrust.

Manual selection of a climb thrust rating overrides the automatic selection.

[Option – With company data link]
Takeoff data uplink may automatically select a thrust derate.

9 TAKEOFF

Push – displays the TAKEOFF REF page.

10 Takeoff Bump Thrust (TO–B)
[Option]

Push – selects takeoff bump thrust limit

Selection of TO–B automatically selects CLB thrust.

Data line title displays takeoff bump thrust. Typical line titles display as “26K BUMP” or “24K BUMP.”

When takeoff bump thrust is selected, assumed temperature (SEL temperature) thrust reduction is not available.

[Option – With company data link]
Takeoff data uplink may automatically select takeoff bump thrust.

Copyright © The Boeing Company. See title page for details.

Selecting Takeoff Thrust

Selecting the maximum takeoff thrust or a derate displays <ACT> inboard of the option. The FMC automatically selects the highest climb thrust available which would not result in a throttle increase, when the aircraft transitions from takeoff to climb. <SEL> is displayed inboard of the selected climb N1 limit.

Copyright © The Boeing Company. See title page for details.

DO NOT USE FOR FLIGHT

Takeoff Reference Page 1/2

The takeoff reference page allows the crew to manage takeoff performance.

[Option – FMC U10.1 and later]
Takeoff flap setting and V speeds are entered and verified. Thrust limits, takeoff position, CG, and trim can be verified or changed.

Preflight pages are selectively displayed to indicate preflight status whenever required entries on those pages are incomplete. Takeoff reference page entries finish the normal preflight. V speeds should be set before completion. FMC position can be updated prior to takeoff.

Copyright © The Boeing Company. See title page for details.

[Option – FMC U10.1 and later]

[Option – FMC U10.1 and later, without data link or takeoff speeds]

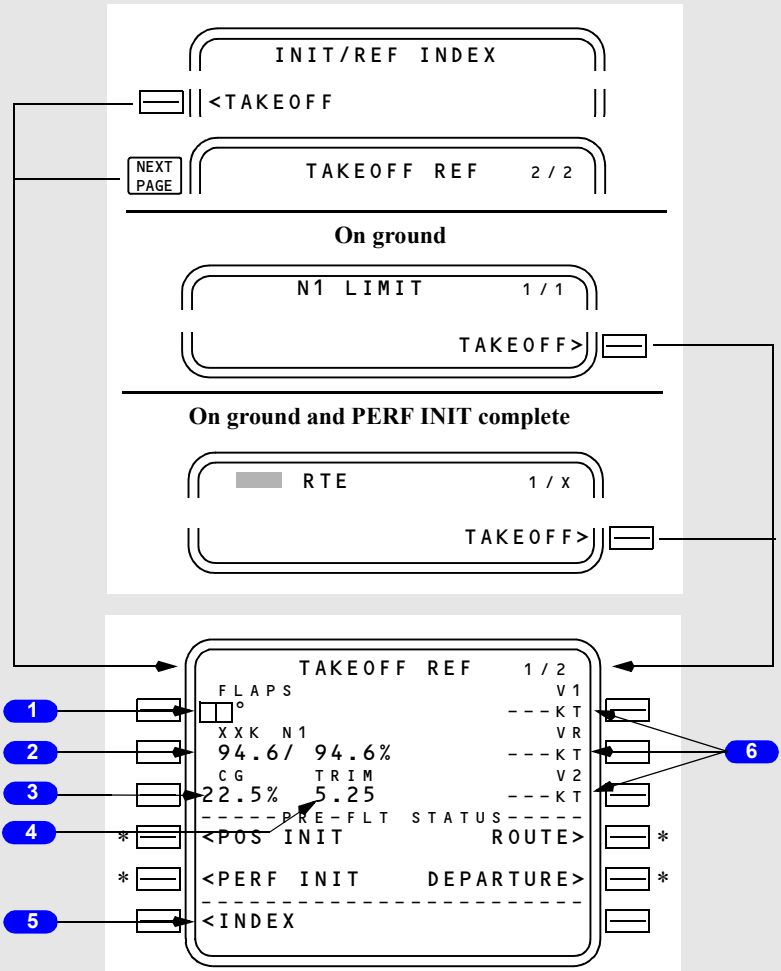

* See subsequent pages for description

Copyright © The Boeing Company. See title page for details.

DO NOT USE FOR FLIGHT

[Option – FMC U10.1 and later, with company data link]

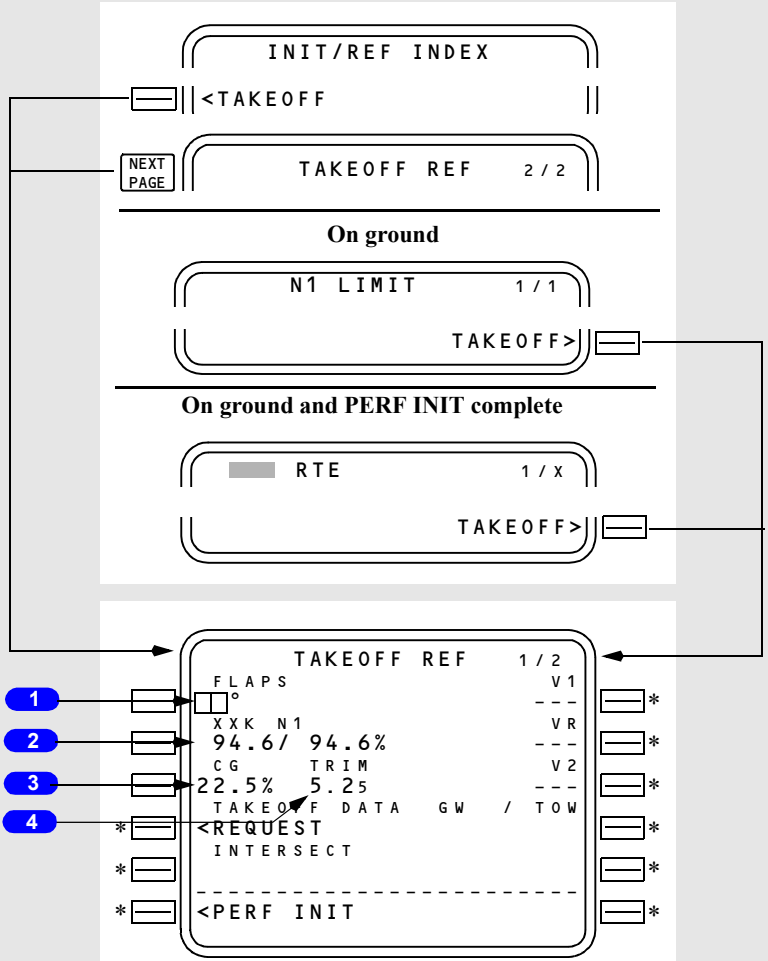

* See subsequent pages for description

Copyright © The Boeing Company. See title page for details.

[Option – FMC U10.1 and later, with FMC computed QRH takeoff speeds]

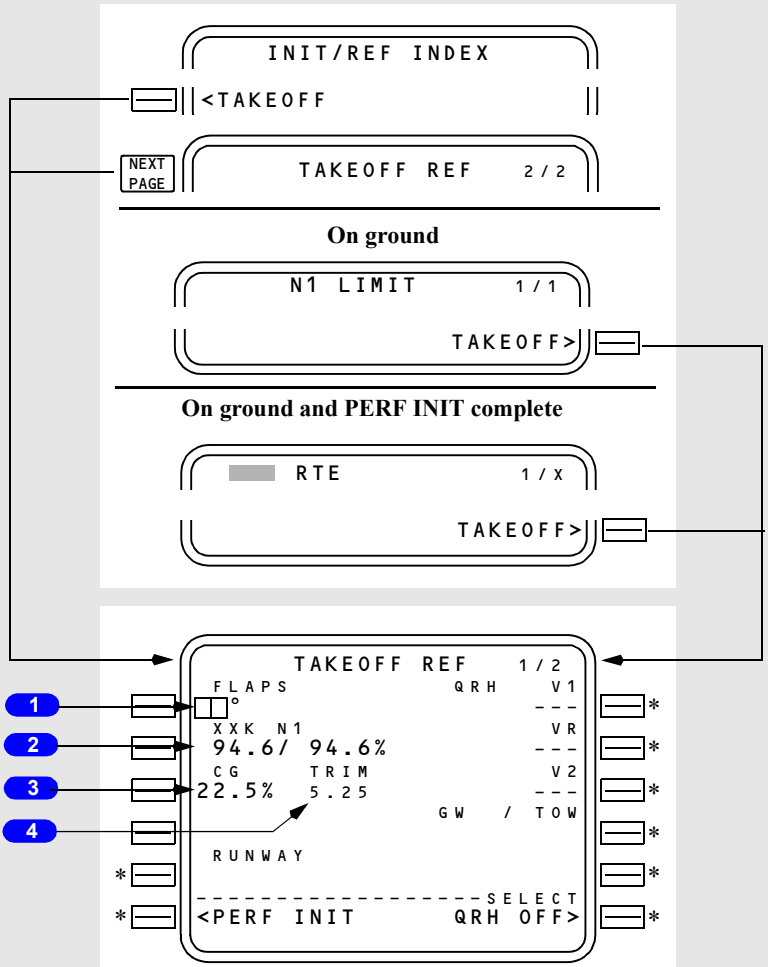

* See subsequent pages for description

Copyright © The Boeing Company. See title page for details.

DO NOT USE FOR FLIGHT

[Option – FMC U10.1 and later, with company data link and FMC computed QRH takeoff speeds]

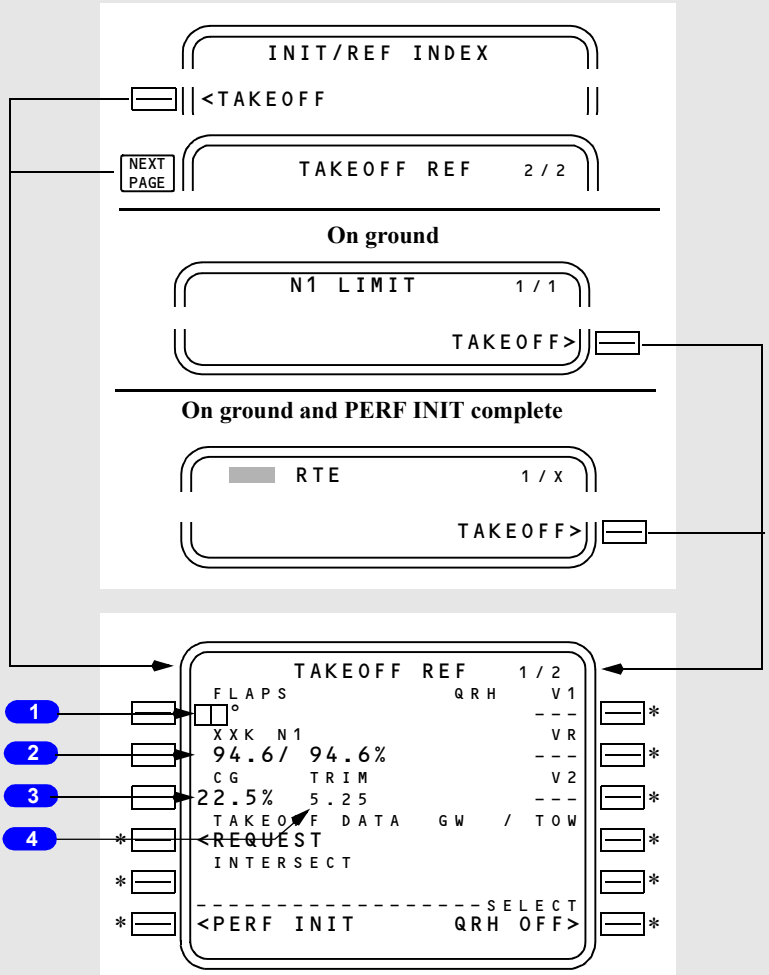

* See subsequent pages for description

1 FLAPS

Enter takeoff flaps setting. Manual entry of 1, 5, 10, 15, or 25 allowed.

2 Takeoff N1 (XXK N1)

Displays the FMC computed N1 for takeoff.

Copyright © The Boeing Company. See title page for details.

Data line title displays full rated thrust or selected takeoff derate thrust. Typical line titles display as “24K N1” or “22K N1.”

Data line title changes to RED XXK N1 when an assumed temperature (SEL TEMP) entry results in a reduced N1 value. If a SEL TEMP and a DERATE are both selected the data line title will change to "RED XXK N1," and the effect on thrust will be additive. The Reference N1 bugs will still display full rated or selected takeoff derate thrust N1 values.

[Option – Takeoff bump thrust]
Data line title changes to XXK BUMP N1 when takeoff bump thrust is selected.

3 Center of Gravity (CG)

Initial display is dashes.

After CG is entered, the FMC calculates and displays stabilizer takeoff trim settings.

4 TRIM

Displays stabilizer takeoff trim setting.

Display is blank unless FLAPS and CG are entered.

5 INDEX

[Option – FMC U10.1 and later without data link or takeoff speeds]

Push – displays the INIT/REF INDEX page.

6 V Speeds

[Option – FMC U10.1 and later without data link or takeoff speeds]

Crew calculated V speeds may be entered and displayed for reference.

Entered V1 and VR will automatically display on the airspeed indication.

Copyright © The Boeing Company. See title page for details.

DO NOT USE FOR FLIGHT

Company Data Link
[Option – With company data link]

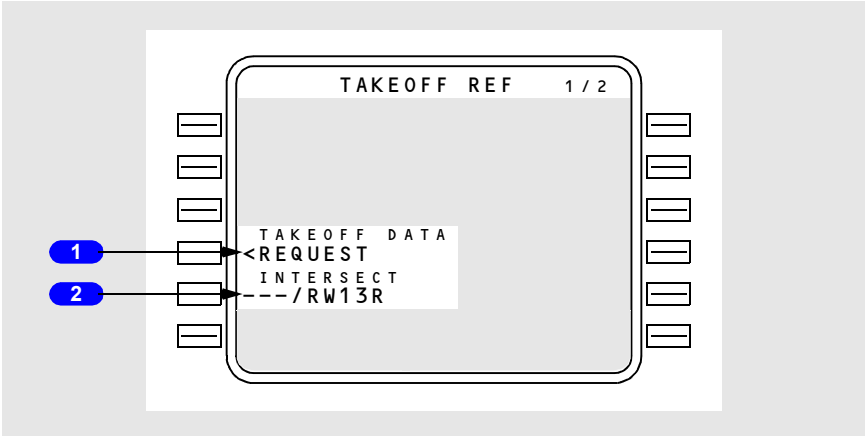

1 TAKEOFF DATA REQUEST

Push – transmits a data link request for a takeoff data uplink. Resulting TAKEOFF REF uplink may contain takeoff data for up to 6 runways, which are stored in FMC uplink memory.

2 Intersection (INTERSECT)

Displays active runway.

An intersection may be entered. Valid entries are 1 to 3 alphanumerics.

If an intersection is entered and TAKEOFF DATA REQUEST is made, the runway/intersection pair is included in the request downlink.

If the displayed runway or runway/intersection pair matches a runway or runway/intersection pair in FMC uplink memory, the associated TAKEOFF REF UPLINK is annunciated for flight crew ACCEPT/REJECT.

Copyright © The Boeing Company. See title page for details.

V Speed Data

[Option – With company data link, without FMC computed takeoff speeds]

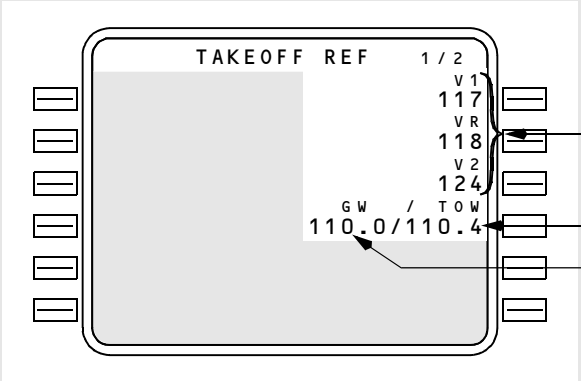

1 V Speeds (V1, VR, and V2)

Crew calculated V speeds may be entered and displayed for reference.

V speeds may be uplinked.

Large font V speeds are displayed on the airspeed indication.

2 Takeoff Weight (TOW)

Displays gross weight the uplink V speeds are based on.

Blank if there are no uplinked V speeds in the column above.

3 Gross Weight (GW)

Displays current gross weight.

Copyright © The Boeing Company. See title page for details.

DO NOT USE FOR FLIGHT

FMC Computed V Speed Data

[Option – With FMC computed QRH takeoff speeds]

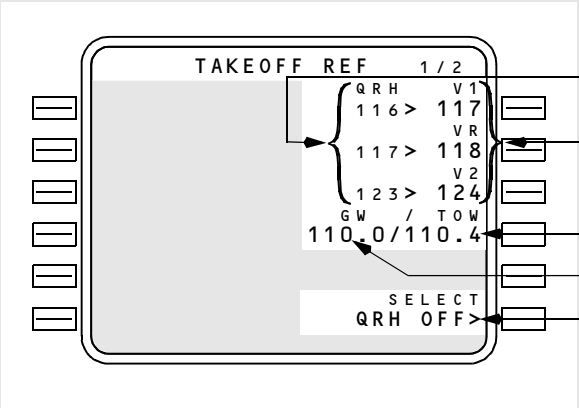

1 QRH
[Option – With FMC computed QRH takeoff speeds]

Displays FMC computed V speeds, based on assumed temperature, current gross weight and flap setting.

2 V Speeds (V1, VR, and V2)

Push – selects associated FMC computed V speed from center column.

Manual entry may be made.

Large font V speeds are displayed on the airspeed indication.

3 Takeoff Weight (TOW)

Displays gross weight that the large font V speeds in the column above are based on.

Blank if there are no large font V speeds in the column above.

4 Gross Weight (GW)

Displays current gross weight.

FMC computed V speeds in the column above are based on this weight.

Copyright © The Boeing Company. See title page for details.

5 Select FMC Computed V Speeds On/Off (SELECT QRH ON/OFF) [Option – With FMC computed QRH takeoff speeds]

When SELECT QRH OFF displayed

- Push – Removes FMC computed V speeds from display.

When SELECT QRH ON displayed

- Push – Displays FMC computed V speeds.

Default is FMC Computed V speeds displayed.

Change of Performance Data After V Speed Entry

V speeds should be entered on the TAKEOFF REF page as a final step of FMC preflight. If V speeds are entered and then performance data (for example, OAT or takeoff thrust) is subsequently changed, the FMC automatically removes the previously entered V speeds and the NO VSPD flag shows on the airspeed indication.

In addition, the scratchpad message VERIFY TAKEOFF SPEEDS displays if any of the following items are changed after V speeds have been entered:

- gross weight
- zero fuel weight
- plan fuel.

[Option – Without company data link or FMC computed takeoff speeds]
The FMC allows the flight crew to re-display the previously entered V speeds.

[Option – With company data link or FMC computed takeoff speeds]
The previously entered V speeds are displayed in small font on the TAKEOFF REF page.

[Option – Without FMC computed takeoff speeds]

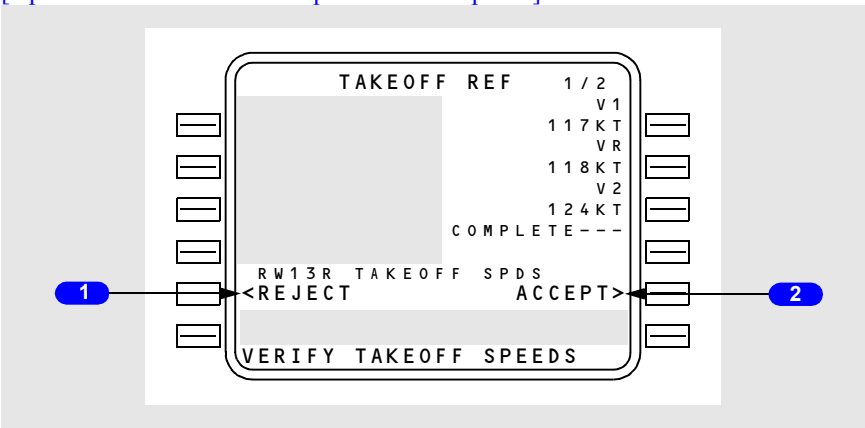

Copyright © The Boeing Company. See title page for details.

DO NOT USE FOR FLIGHT

[Option – With FMC computed QRH takeoff speeds]

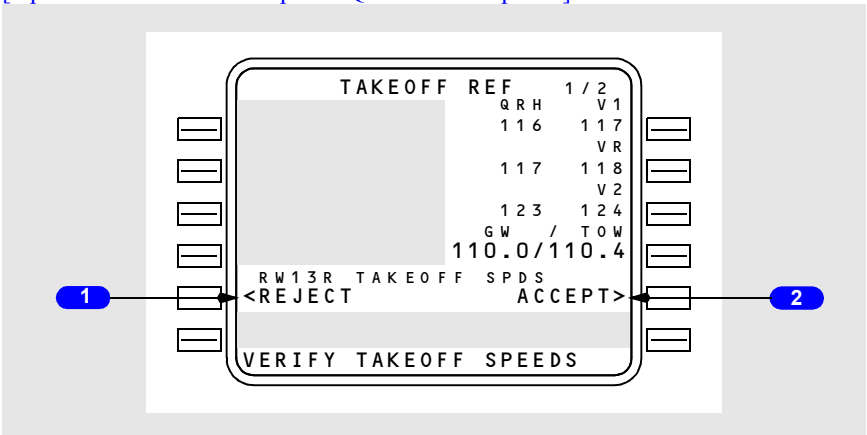

[Option – Data link without FMC computed takeoff speeds]

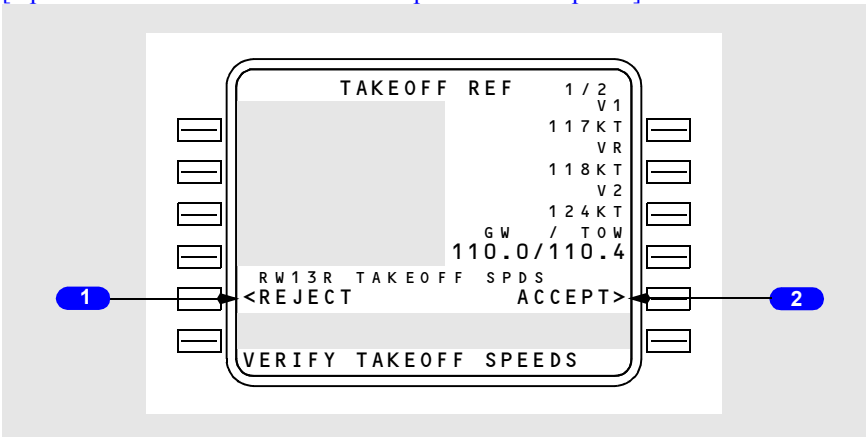

1 REJECT

[Option – With plan fuel]
Displayed if V speeds have been entered and airplane gross weight, ZFW, or plan fuel has been changed.

[Option – Without plan fuel]
Displayed if V speeds have been entered and airplane gross weight or ZFW has been changed.

Selection causes the now small font takeoff speeds to disappear.

Copyright © The Boeing Company. See title page for details.

2 ACCEPT

[Option – With plan fuel]
Displayed if V speeds have been entered and airplane gross weight, ZFW, or plan fuel has been changed.

[Option – Without plan fuel]
Displayed if V speeds have been entered and airplane gross weight or ZFW has been changed.

Selection changes the small font takeoff speeds to large font.

Preflight Status

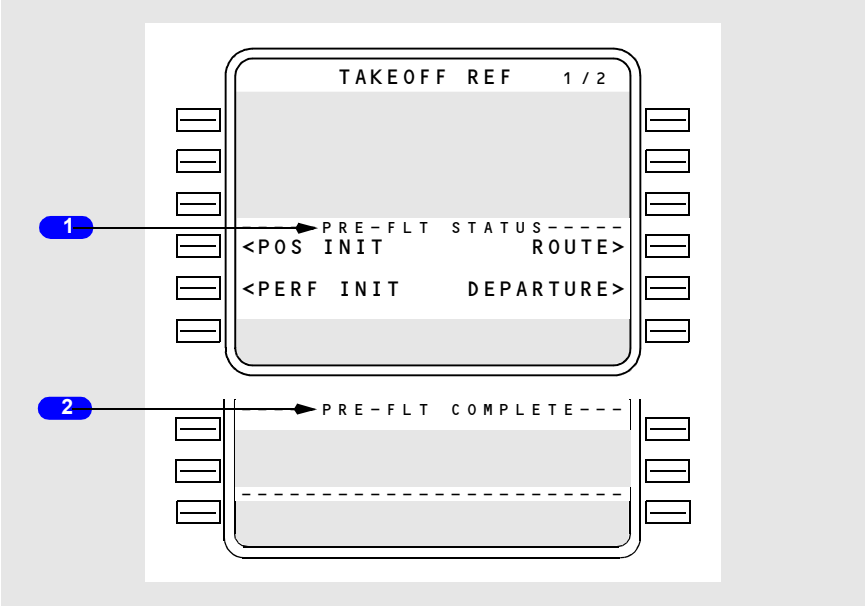

1 Preflight Status (PRE–FLT STATUS)

Displays when required preflight data is not complete. Lines below are selectively displayed to allow line selection of incomplete pages;

- POS INIT shows if a valid IRS position entry disagrees with the position determined by any IRS in the ALIGN mode; otherwise blank
- PERF INIT shows if any required PERF INIT entries not completed; otherwise blank
- ROUTE shows if a route is not active; otherwise blank
- DEPARTURE shows if RTE page 1 displays prompts for RUNWAY and VIA lines; otherwise blank.

Copyright © The Boeing Company. See title page for details.

DO NOT USE FOR FLIGHT

[Option – FMC U10.1 and later]
- N1 LIMIT shows if valid OAT has not been entered.

2 Preflight Complete (PRE–FLT COMPLETE)

Displayed following completion of required entries on the POS INIT, RTE, and PERF INIT pages.

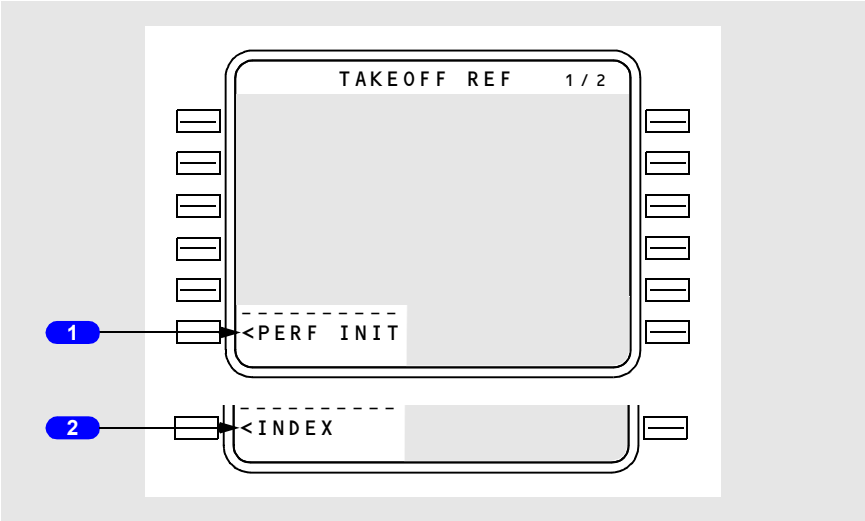

1 Preflight Incomplete

When required preflight entries are not complete, the related page title displays
- POS INIT – IRS position not entered or invalid
- PERF INIT – required performance data not entered or executed
- ROUTE – required RTE page data not entered
- DEPARTURE – runway or route data not entered on the RTE page.

[Option – Non–aspirated TAT]
- N1 LIMIT – OAT not entered.

Push – Displays associated page.

2 Preflight Complete (INDEX)

When the required preflight entries are complete, the index prompt is displayed below the takeoff reference page data. When required preflight entries are not complete, the related page title replaces the INDEX prompt.

Displayed following completion of required preflight entries on the POS INIT, RTE, and PERF INIT pages.

Push – Displays INIT REF INDEX page.

Copyright © The Boeing Company. See title page for details.

FMC Takeoff Position Update

[Option – Runway position update via the CDU only]

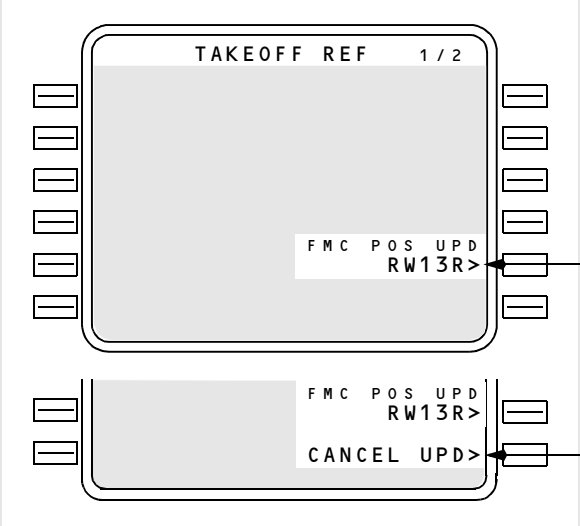

[Option – Runway position update with TO/GA activation, meters]

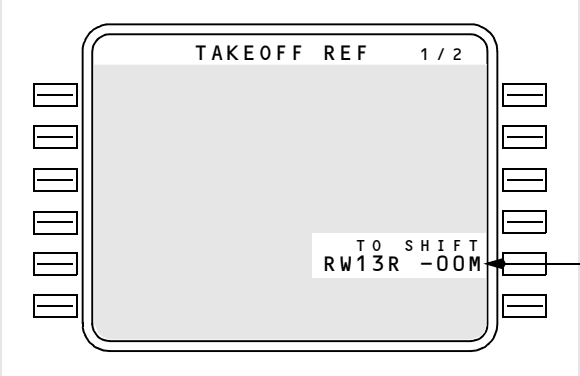

Copyright © The Boeing Company. See title page for details.

DO NOT USE FOR FLIGHT

[Option – Runway remaining update with TO/GA activation, feet]

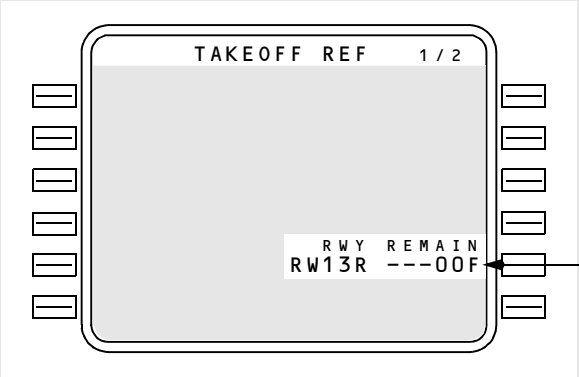

1 FMC Position Update (FMC POS UPD)
[Option – Runway position update via the CDU only]

Displayed automatically on the ground when preflight complete and a departure runway is entered into the active route.

Selection illuminates the execute key and displays the CANCEL UPDATE prompt on line 6R.

Execution updates the computed FMC position to the threshold of the departure runway.

1 Takeoff Shift (TO SHIFT)
[Option – Runway position update with TO/GA activation, FMC U10.2 and later]

Automatically displays the departure runway from the route page.

If a takeoff shift distance is not entered and GPS UPDATE is OFF, the FMC updates to the runway threshold when TO/GA is pushed.

If a takeoff shift distance is entered and GPS UPDATE is OFF, the FMC updates to the threshold of the departure runway plus the entered distance when the TO/GA switch is pushed.

TO/GA position update inhibited if GPS UPDATE is ON.

Following TO/GA update, the runway identifier and any entered shift value are highlighted in reverse video characters.

To remove a TO SHIFT entry, reselect RWY on the RTE page.

Copyright © The Boeing Company. See title page for details.

1 Runway Remaining (RWY REMAIN)

[Option – Runway remaining update with TO/GA activation, FMC U10.2 and later]

Automatically displays the departure runway from the RTE page.

If a runway remaining distance is not entered and GPS UPDATE is OFF, the FMC updates to the runway threshold when TO/GA is pushed.

If a runway remaining distance is entered and GPS UPDATE is OFF, the FMC updates to the runway length remaining when the TO/GA switch is pushed.

TO/GA position update inhibited if GPS UPDATE is ON.

Following TO/GA update, the runway identifier and any entered shift value are highlighted in reverse video characters.

To remove a RWY REMAIN entry, reselect RWY on RTE page.

2 Cancel Update (CANCEL UPD)

[Option – Runway position update via the CDU only]

Displayed after line selection of the FMC POS UPD prompt.

Selection clears the prompt, cancels the position update armed condition, and extinguishes the execute key light.

Copyright © The Boeing Company. See title page for details.

DO NOT USE FOR FLIGHT

Takeoff Reference Page 2/2

[Option – FMC U10.1 and later, with company data link or FMC computed takeoff speeds]

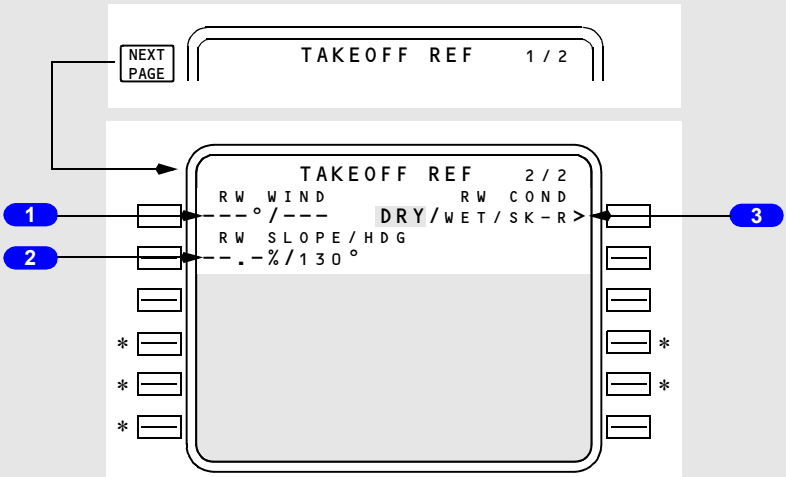

1 Runway Wind (RW WIND)

Enter surface wind direction and speed.

Entry is optional for preflight completion.

2 Runway Slope/Heading (RW SLOPE/HDG)

Enter runway slope.

Entry is optional for preflight completion.

Valid runway slope is U or + for up or D or – for down followed by slope in percent gradient.

HDG displays runway heading for origin airport.

3 Runway Condition (RWY COND)

Select runway condition:

- DRY – Dry runway computations
- WET – Wet runway computations
- SK–R – Skid resistant runway computations

Default condition is DRY.

Copyright © The Boeing Company. See title page for details.

Active runway condition is highlighted.

Takeoff Thrust

[Option – FMC U10.1 and later]

[Option – With automatic thrust reduction after takeoff]

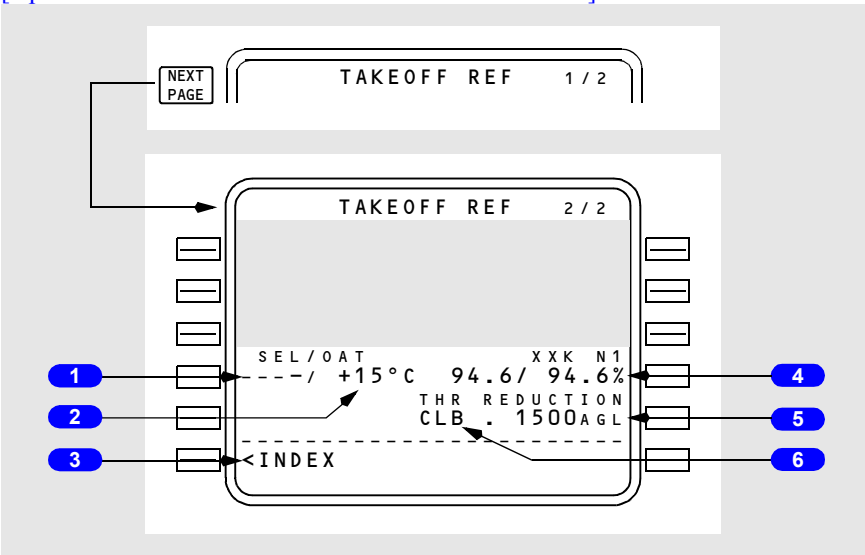

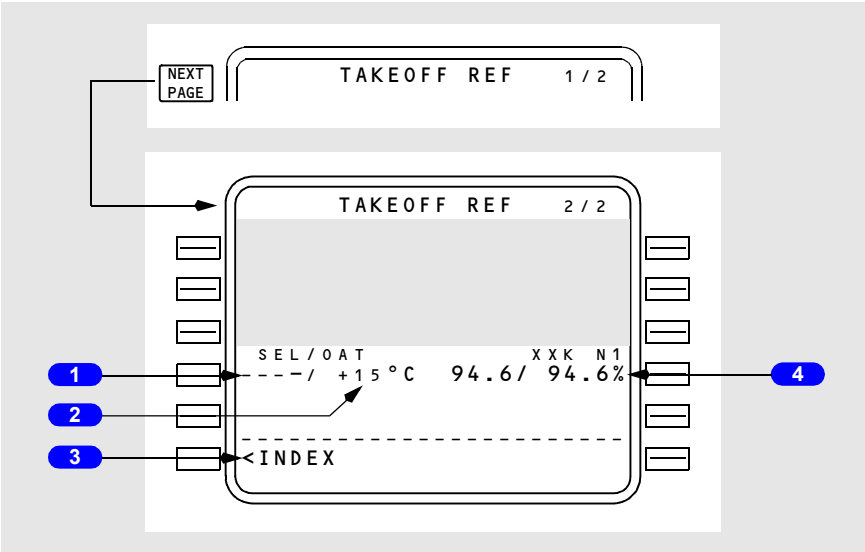

1 Selected Temperature (SEL)

Entry of an assumed temperature calculates a reduced thrust takeoff N1.

Copyright © The Boeing Company. See title page for details.

DO NOT USE FOR FLIGHT

Entry can be made in degrees C or degrees F.

Maximum allowable entry is 70 degrees C (158 degrees F). The FMC, however, will limit the N1 to 25% takeoff reduction.

Repeats data shown on the preflight version of the N1 LIMIT page.

2 Outside Air Temperature (OAT)
[Option –Aspirated TAT]

Aspirated TAT displays the sensed OAT in small–size characters. Manual entry of actual takeoff OAT is displayed in large–sized characters.

Sensed or manually entered OAT is used by the FMC to calculate the takeoff N1 limits.

Entry can be made in degrees C or degrees F.

2 Outside Air Temperature (OAT)
[Option – Non–Aspirated TAT]

Manual entry of actual takeoff OAT is used by the FMC to calculate the takeoff N1 limits.

Entry can be made in degrees C or degrees F.

3 INDEX

Push – displays the INIT/REF INDEX page.

4 Takeoff N1 (XXK N1)

Displays the FMC computed N1 for takeoff.

Data line title displays full rated thrust or selected takeoff derate thrust. Typical line titles display as “24K N1” or “22K N1.”

Data line title changes to RED XXK N1 when an assumed temperature (SEL TEMP) entry results in a reduced N1 value. The Reference N1 bugs will still display full rated or selected takeoff derate thrust N1 values.

[Option – Takeoff bump thrust]
Data line title changes to XXK BUMP N1 when takeoff bump thrust is selected.

Repeats the same information shown on TAKEOFF REF page 1 and the preflight version of the N1 LIMIT page.

Copyright © The Boeing Company. See title page for details.

5 Thrust Reduction (THR REDUCTION)
[Option – With automatic takeoff thrust reduction]

Altitude above origin airport elevation at which the autothrottle reduces from takeoff N1 to climb N1.

[Option – FMC U10.3 and later]
The default value is determined by the airline and is stored in the model/engine database. The default is displayed in small font.

Manual entries allowed on the ground. Entries must be between 800 to 15,000 feet and are displayed in large font.

Deletion of a manual entry returns the display to the default value.

6 Selected Climb Rating
[Option – With automatic takeoff thrust reduction]

Displays the climb rating that will be set at the THR REDUCTION altitude, as selected on the preflight version of the N1 LIMIT page.

Copyright © The Boeing Company. See title page for details.

DO NOT USE FOR FLIGHT

[Option – FMC U10.3 and later, with quiet climb]

[Option – With QFE/QNH selection]

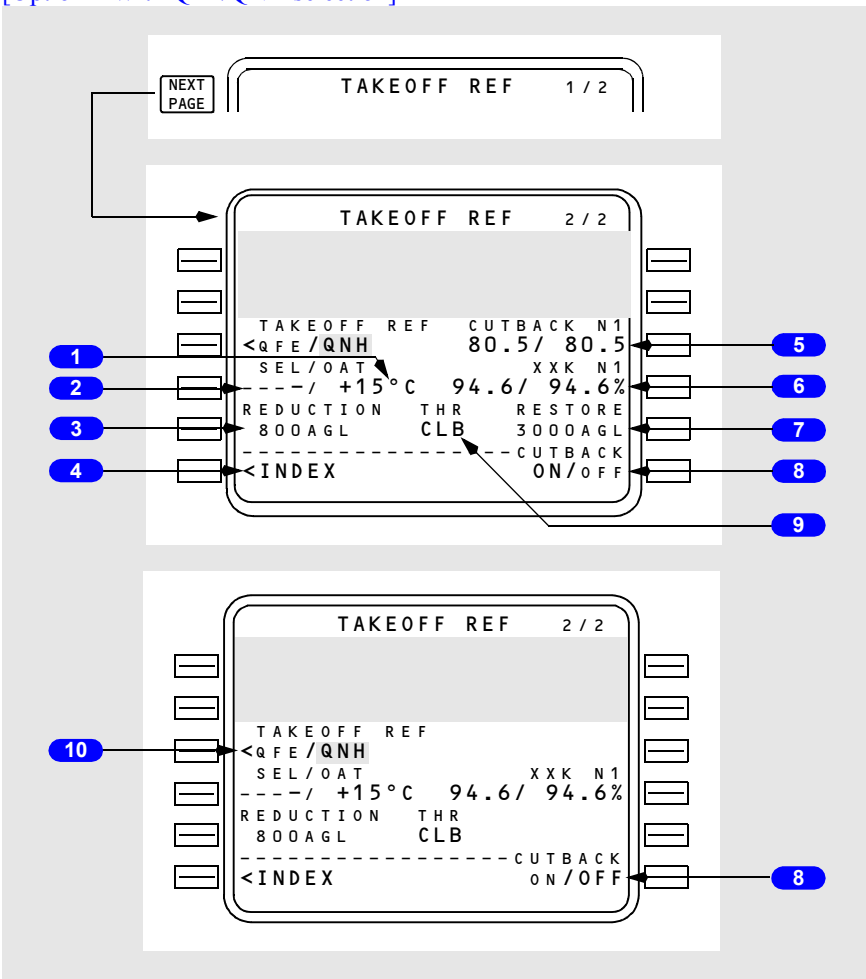

1 Outside Air Temperature (OAT)
[Option –Aspirated TAT]

Aspirated TAT displays the sensed OAT in small–size characters. Manual entry of actual takeoff OAT is displayed in large–sized characters.

Sensed or manually entered OAT is used by the FMC to calculate the takeoff N1 limits.

Entry can be made in degrees C or degrees F.

Copyright © The Boeing Company. See title page for details.

2 Selected Temperature (SEL)

Entry of an assumed temperature calculates a reduced thrust takeoff N1.

Entry can be made in degrees C or degrees F.

Maximum allowable entry is 70 degrees C (158 degrees F). The FMC, however, will limit the N1 to 25% takeoff reduction.

Repeats data shown on the preflight version of the N1 LIMIT page.

3 REDUCTION

With cutback mode OFF, altitude above origin airport elevation at which the autothrottle reduces from takeoff N1 to climb N1.

With cutback mode ON, altitude above origin airport elevation at which the transition from takeoff thrust to cutback thrust occurs.

Manual entries allowed on the ground.

The default value is determined by the airline and is stored in the model/engine database. The default is displayed in small font.

4 INDEX

Push – displays the INIT/REF INDEX page.

5 CUTBACK N1

FMC calculated cutback N1.

Prior to takeoff, if the FMC is unable to calculate the cutback N1 using the entered data, CUTBACK UNAVAILABLE displays.

6 Takeoff N1 (XXK N1)

Displays the FMC computed N1 for takeoff

Data line title displays full rated thrust or selected takeoff derate thrust. Typical line titles display as “24K N1” or “22K N1.”

Data line title changes to RED XXK N1 when an assumed temperature (SEL TEMP) entry results in a reduced N1 value. The Reference N1 bugs will still display full rated or selected takeoff derate thrust N1 values.

[Option – Takeoff bump thrust]
Data line title changes to XXK BUMP N1 when takeoff bump thrust is selected.

Repeats the same information shown on TAKEOFF REF page 1 and the preflight version of the N1 LIMIT page.

Copyright © The Boeing Company. See title page for details.

DO NOT USE FOR FLIGHT

7 RESTORE

The altitude at which the normal climb thrust is restored.

8 CUTBACK ON/OFF

Push – selects cutback mode ON/OFF.

Currently selected cutback mode is displayed in large font.

Default is cutback mode OFF.

9 Selected Climb Rating

Displays the climb rating that will be set at the THR REDUCTION altitude, as selected on the preflight version of the N1 LIMIT page.

10 Takeoff Reference (TAKEOFF REF)
[Option – With QFE/QNH selection]

Push – Toggles altimeter reference between QFE and QNH.

Default is QNH.

Resets to QNH at flight complete.

Reflects LANDING REF selection on APPROACH REF page.

Active altimeter reference is highlighted.

During preflight with QFE selected, the PFD altitude indications show zero feet at the departure runway threshold. The PFD altitude indication background colors change to green.

If QFE is the current altimeter reference, and the EFIS control panel STD switch is pushed, The takeoff reference automatically toggles to QNH.

Copyright © The Boeing Company. See title page for details.

Menu Page

[Option – MCDU]

The menu page is selected with the MENU key or is automatically displayed when the currently active subsystem fails or on initial power up if the FMC system is not detected.

The menu page displays subsystems (ACARS, DFDAU, etc.) that require control/display functions through the MCDU and provides a means to temporarily access to these subsystems. The active system is indicated by <ACT> displayed next to the system title. A subsystem that requires use of the CDU displays a request message <REQ> next to the subsystem title. The FMC system or a requesting subsystem is accessed by using the line select key next to the title. The FMC can be reselected by selecting the FMC prompt on the MENU page or selecting any mode key (INIT/REF, RTE, etc.). A subsystem can be temporarily placed on hold <HLD> by selecting the subsystem XXXXXX HOLD> line select key returning the CDU display to the currently active FMC page (XXXXXX represents the system name). While the subsystem is on hold the MCDU CALL light is illuminated. To reselect the subsystem on hold, push the subsystem line select key again. When a subsystem is placed on hold a XXXXXX LOGOFF prompt appears to allow for release of the subsystem being held. No more than one subsystem can be selected at a time. If an attempt is made to select more than one subsystem, a FIRST LOGOFF XXXXXX prompt is displayed as a reminder to logoff the currently active subsystem.

[Option – Liquid crystal display MCDU]

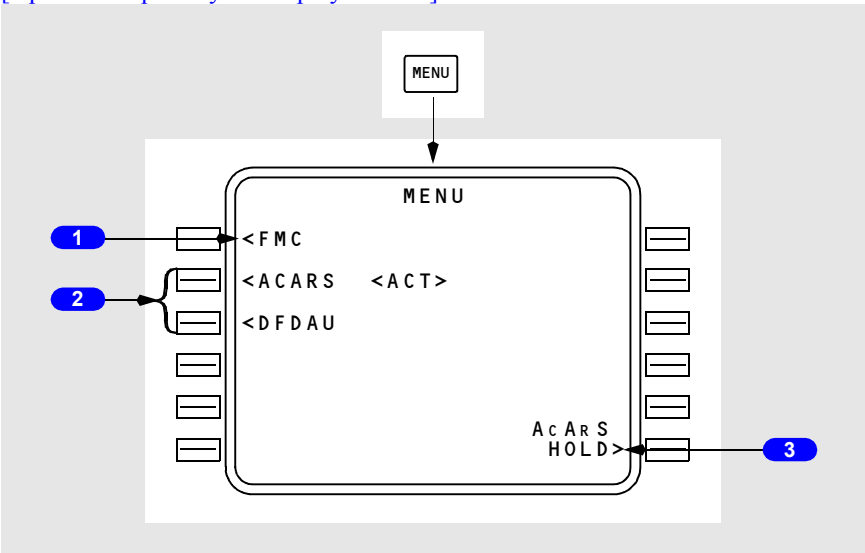

Copyright © The Boeing Company. See title page for details.

DO NOT USE FOR FLIGHT

1 FMC

Push – selects FMC as the system for which the MCDU will be active in providing control/display function.

2 Other Aircraft Subsystems (typical)

Push – selects the subsystem for which the MCDU will be active in providing control/display function.

3 XXXXXX HOLD/LOGOFF

Push - places active subsystem on hold or logs off subsystem and returns control to the FMC.

Copyright © The Boeing Company. See title page for details.

Introduction

The FMC takeoff phase begins with the selection of takeoff/go–around (TO/GA). Preparation for this phase begins in the preflight phase and includes entry of the TAKEOFF REF page data.

The takeoff phase automatically changes to the climb phase when climb thrust is selected. The climb phase continues to the top of climb point, where the cruise phase begins.

During these phases, the following pages are normally used:

- TAKEOFF REF page – to make last minute changes to the departure runway
- DEPARTURES page – to make last minute changes to the SID
- CLIMB page – to modify climb parameters and monitor airplane climb performance
- RTE LEGS page – to modify the route and monitor route progress
- PROGRESS page – to monitor the overall progress of the flight
- N1 LIMIT page – to select alternate climb thrust limits
- DEP/ARR INDEX page – to select an approach during a turn–back.

Takeoff Phase

When last minute changes are made to the departure runway and SID, the TAKEOFF REF and DEPARTURES pages must be modified to agree. The modifications are performed the same as during preflight.

With correct takeoff parameters, the FMC commands the selected takeoff thrust when the TO/GA switch is pushed. During the takeoff roll, the autothrottle commands the thrust and the FMC commands acceleration to between V2+15 and V2+25 knots.

LNAV can be selected prior to takeoff. Prior to 50 feet radio altitude, roll command is wings level. At 50 feet radio altitude, if within engagement criteria, LNAV engages and provides roll commands to fly the route leg. VNAV may be engaged to control the climb profile.

Note: For LNAV to be engaged on the ground, the departure runway must be selected and the course, to the first waypoint, must be within 5 degrees of the runway heading.

Copyright © The Boeing Company. See title page for details.

DO NOT USE FOR FLIGHT

Climb Phase

VNAV commands acceleration to:

- 250 knots
- waypoint speed constraints, or
- the speed restriction associated with the origin airport, whichever is more restrictive.

At the climb thrust reduction point, climb thrust can be selected. Passing 10,000 feet, VNAV commands an acceleration to the economy climb speed, which is maintained until entering the cruise phase. Waypoint speed constraints take priority if slower than target speed.

[Option – With automatic thrust reduction after takeoff]
At the climb thrust reduction point, the FMC commands a reduction to the selected climb thrust. Passing 10,000 feet, VNAV commands an acceleration to the economy climb speed, which is maintained until entering the cruise phase. Waypoint speed constraints take priority if slower than target speed.

[Option – With quiet climb]
When cutback mode is selected ON, the FMC calculates and commands a cutback thrust rating at the required cutback altitude. A new N1 is calculated during climb and normal climb thrust is restored at the RESTORE altitude. Passing 10,000 feet, VNAV commands an acceleration to the economy climb speed, which is maintained until entering the cruise phase. Waypoint speed constraints take priority if slower than target speed.

During the climb, VNAV complies with the LEGS page waypoint altitude and speed constraints. A temporary level–off for a crossing altitude restriction is accomplished at the current commanded speed.

When the climb speed profile causes an anticipated violation of a waypoint altitude constraint, the FMC displays the CDU scratchpad message UNABLE NEXT ALTITUDE. A different speed profile that provides a steeper climb angle must be manually selected.

If a CLB 1 or CLB 2 derate is selected, the derate is maintained for the initial part of the climb. Thrust eventually increases to maximum climb thrust by 15,000 feet.

Copyright © The Boeing Company. See title page for details.

Climb Page

The climb page is used to evaluate, monitor, and modify the climb path. The data on the climb page comes from preflight entries made on the route and performance pages.

[Option – FMC U10.3 and later]
The climb page is automatically selected by pushing the CLB function key on the ground and during takeoff and climb. The TAKEOFF REF page automatically transitions to the climb page after takeoff.

[Option – FMC U10.3 and later with FANS MCDU]
The climb page is automatically selected by pushing the VNAV function key on the ground and during takeoff and climb. The climb page is the first of the three pages selected with the VNAV function key. Access from other performance pages is via the NEXT/PREV PAGE key. The TAKEOFF REF page automatically transitions to the climb page after takeoff.

The FMC climb mode can be economy or fixed speed. In either mode, similar data is displayed on the page.

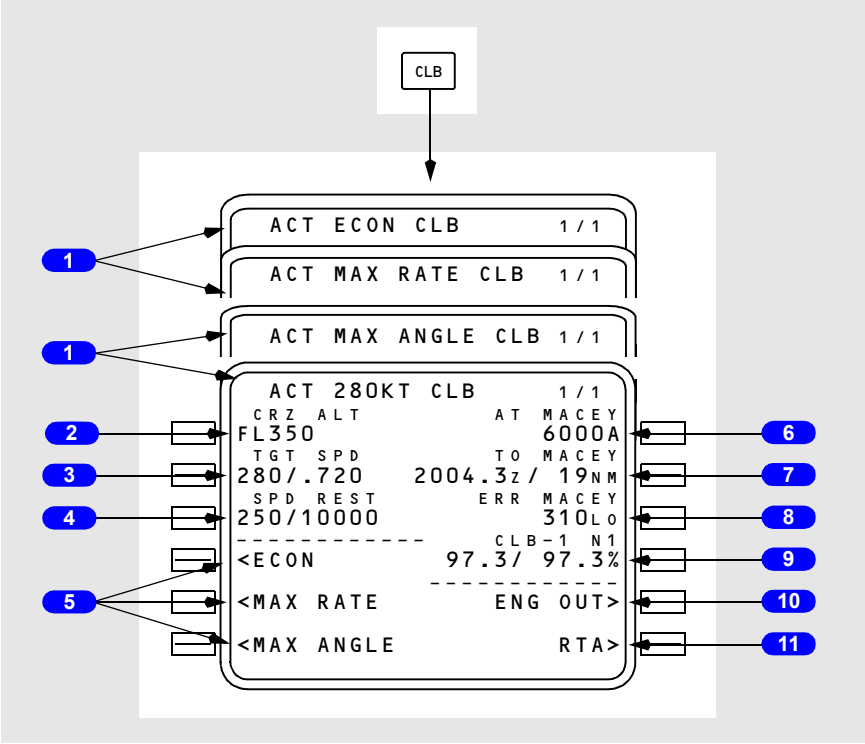

Copyright © The Boeing Company. See title page for details.

DO NOT USE FOR FLIGHT

[Option – With FANS MCDU]

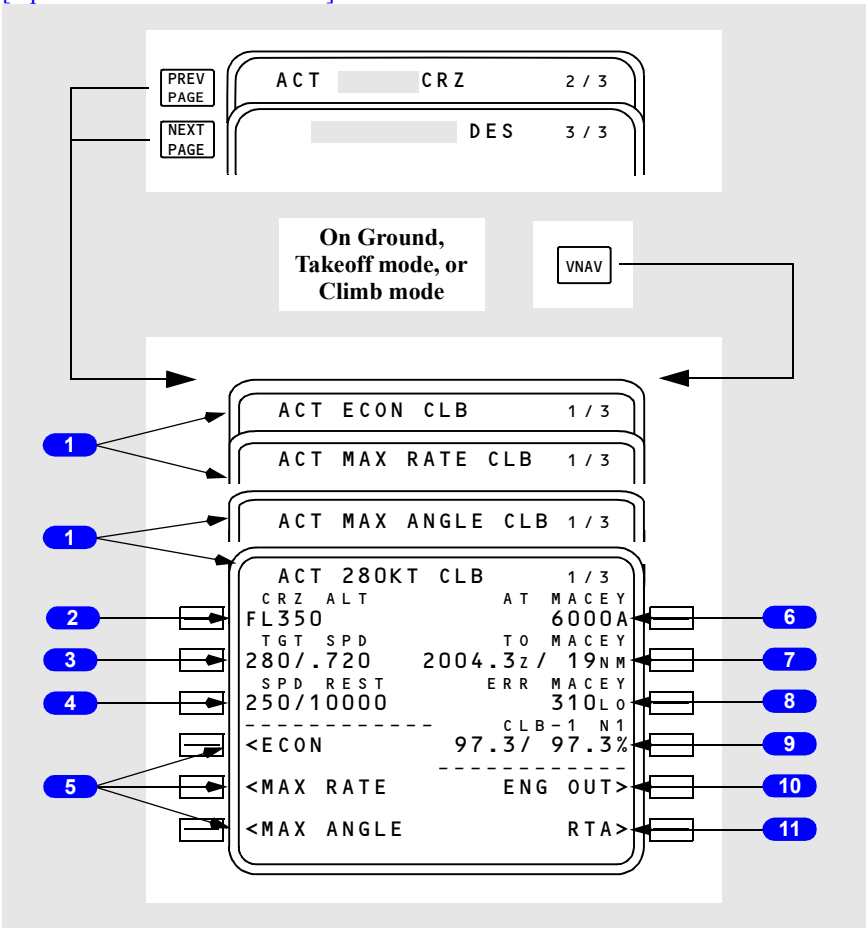

1 Page Title

The page title displays the type of climb. Normally, the title displays ECON for the economy climb mode. Fixed speed climbs modify the title.

ECON indicates the speed is based on a cost index.

MAX RATE indicates the speed is based on the maximum altitude over the shortest period of time.

MAX ANGLE indicates the speed is based on the maximum altitude over the shortest horizontal distance.

Copyright © The Boeing Company. See title page for details.

Fixed climb speeds display XXXKT for a fixed CAS climb speed or M.XXX for a fixed Mach climb speed profile. Reasons for fixed speeds are:

- takeoff/climb acceleration segment constraints
- waypoint speed constraints
- an altitude constraint associated with a speed constraint
- a speed restriction
- a crew entered speed.

Displays ACT when the climb phase is active.

2 Cruise Altitude (CRZ ALT)

The cruise altitude from the PERF INIT page is displayed. A new altitude can be manually entered.

2 Cruise Altitude (CRZ ALT)
[Option – With speed and altitude intervention]

The cruise altitude from the PERF INIT page is displayed. The altitude can be changed by two methods:

- a new altitude can be manually entered from the CDU at any time. Changing the altitude in this manner creates a modification.
- setting the MCP altitude above the current FMC CRZ altitude, provided no intermediate altitude constraints exist between the current airplane altitude and the MCP target altitude. Selecting the new altitude on the MCP and pushing the altitude intervention button places the new altitude in the CRZ ALT data line. Entering a new cruise altitude in this manner does not create a modification.

3 Target Speed (TGT SPD)

Displays computed values or manually entered values for the selected mode. Computed speed is limited to a maximum of 335 knots/M.809.

Airspeed and/or Mach may be entered using the keyboard. Title will display manually entered value.

The active controlling speed is highlighted in reverse video.

4 Speed Restriction (SPD REST)

The speed restriction line displays the speed restriction/altitude from one of the following sources:

- the navigation database value for the origin airport
- waypoint related restriction from the RTE LEGS page if restriction limits climb speed
- a default speed of 250 knots and 10,000 feet (example 250/10000)

Copyright © The Boeing Company. See title page for details.

- displays XXX/FLAPS if the active speed restriction is lower than the minimum speed for the selected flap setting
- displays XXX/HOLD when decelerating to hold speed prior to hold entry fix.

Dashes displayed if no active speed restriction exists.

Manual crew entries or deletions may be made. HOLD or FLAPS speed may not be deleted or modified.

Note: If the FMC default speed restriction is overwritten, it will be deleted and not return after the overwrite condition passes. (e.g. the default of 250/10000 is overwritten to 230/3000, after 3000 feet is passed there will be no speed restriction and VNAV will accelerate to the unrestricted climb speed.

The active controlling speed is highlighted in reverse video.

[Option – With quiet climb]
When cutback mode is selected ON, the cutback airspeed and RESTORE altitude is the active speed/altitude restriction. Deletion or modification of the cutback speed/altitude restriction is not allowed.

5 Climb Page Prompts

PUSH – selects various CLB pages.

Following line selection, the prompt for that page blanks.

6 AT XXXXX

The waypoint constraint line displays the next waypoint having an altitude constraint. Constraints are entered on the RTE LEGS page or by departure procedure selection. The constraints can be deleted on this page or the RTE LEGS page. The waypoint may be a HOLD AT point.

Display is blank if no restriction exists.

7 TO XXXXXX

Displays ETA and distance to go to waypoint on AT XXXXXX line.

If no waypoint constraint exists, values are for CRZ ALT.

8 Error (ERR XXXXX)

Displays predicted altitude undershoot for the waypoint on AT XXXXXX line.

During VNAV operation, the FMC commands a level off if an overshoot is predicted.

Display is blank, including the label, if no error exists.

Copyright © The Boeing Company. See title page for details.

9 Climb N1 (CLB N1, CLB – X N1)
[Option – FMC U10.3 and later]

Displays the computed climb N1 value.

9 Climb N1 (CUTBACK N1, CLB N1, CLB – X N1)
[Option – FMC U10.3 and later with quiet climb]

Displays the computed climb N1 value.

10 Engine Out (ENG OUT)

Selection displays RT ENG OUT and LT ENG OUT prompts. See ENG OUT CLB page description.

[Option – With engine out SIDS]
Selection will also load the engine–out SID if the following conditions are true:

- an engine–out SID exists for the ACTIVE departure runway
- an engine–out SID is not already selected for the active route
- the flaps are not up and have not been up since the takeoff was started
- flight phase is takeoff or climb
- the airspeed is greater than 80 kts (airborne).

[Option – FMC U10.4 and later]
When the above conditions are met and there is a loss of thrust or split between the thrust levers, the FMC will automatically load the engine-out SID upon detection of the engine-out condition.

11 Required Time of Arrival (RTA)

Displays the RTA PROGRESS page.

ERASE prompt replaces RTA during a page modification.

Copyright © The Boeing Company. See title page for details.

RTA Climb Page

The RTA climb page is displayed when a required time of arrival is active.

The RTA climb page is automatically selected by pushing the CLB function key when RTA is active.

[Option – With FANS MCDU]
During climb, the RTA climb page is automatically selected by pushing the VNAV function key when RTA is active.

Displays on this page are the same as other climb pages except as noted.

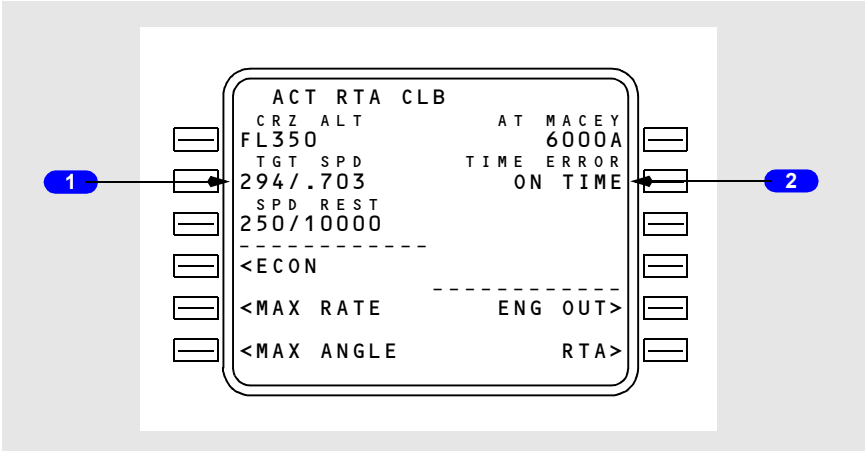

1 Target Speed (TGT SPD)

Displays computed speed required to meet entered RTA.

When RTA is exited by waypoint sequence or deletion, this speed changes to FMC target speed.

2 TIME ERROR

Displays computed time error at RTA waypoint. Same as RTA PROGRESS page.

Copyright © The Boeing Company. See title page for details.

RTE LEGS Page

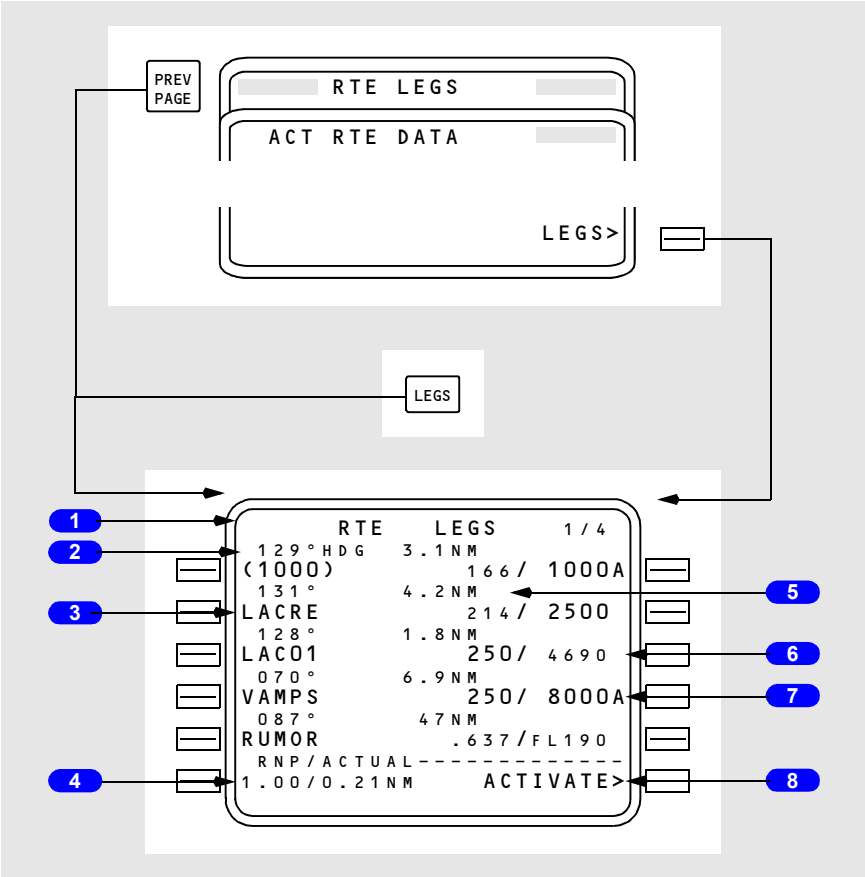

1 Page Title

An active route legs page title is displayed with ACT as part of the title. A modified page title displays a reverse video MOD.

Copyright © The Boeing Company. See title page for details.

DO NOT USE FOR FLIGHT

2 Leg Direction

The leg segment direction is displayed as the title of the waypoint line. Courses are displayed in magnetic (xxx°) or true (xxx° T). Directions to maintain an arc display the arc distance, the word ARC followed by the direction, and left or right (24 ARC L). The computed great circle route leg directions may be different than chart values. Heading leg segments to conditional waypoints are displayed as (xxx° HDG) and track leg segments are displayed as (xxx° TRK). Directions may be displayed as special procedural instructions, such as HOLD AT or PROC TURN.

Display is blank for an undefined course.

3 Waypoint Identifier

The current active leg is always displayed at the top of the first active RTE LEGS page.

All route waypoints are displayed. Waypoints on an airway are included on the route legs page. Waypoints appear in flight sequence.

Waypoints can be entered and moved. This includes:

- adding new waypoints
- removing existing waypoints
- resequencing existing waypoints
- linking route discontinuities.

Displays the waypoint by name or condition.

Box prompts are displayed for route discontinuities.

Dashes are displayed for the next line beyond the end of the route.

4 Required Navigational Position/Actual (RNP/ACTUAL)

Displays the required navigation accuracy compared to actual navigation accuracy.

Manual entry is allowed.

5 Distance to Waypoint

Displays the distance from the airplane or the waypoint to the next waypoint.

6 Calculated Waypoint Speed/Altitude

Displays the calculated speed or altitude at the waypoint in small font.

7 Specified Waypoint Speed/Altitude

Displays any waypoint speed or altitude constraint in large font.

Manual entry is allowed.

Copyright © The Boeing Company. See title page for details.

8 ACTIVATE, RTE DATA

The activate prompt is displayed on the legs page when the route is not active.

Push –

- ACTIVATE arms the execute function. Pushing the EXEC key activates the route and changes the ACTIVATE prompt to RTE DATA
- RTE DATA displays the route data page. The RTE DATA prompt is used to review or modify additional information about the route.

Copyright © The Boeing Company. See title page for details.

DO NOT USE FOR FLIGHT

Map Center Step Display

The map center step prompt replaces ACTIVATE or RTE DATA when the EFIS control panel mode selector is placed in the PLAN position. Pushing the prompt key advances the waypoint that is displayed in the center of the navigation display. The label <CTR> is displayed to the right of the corresponding waypoint on the RTE LEGS page.

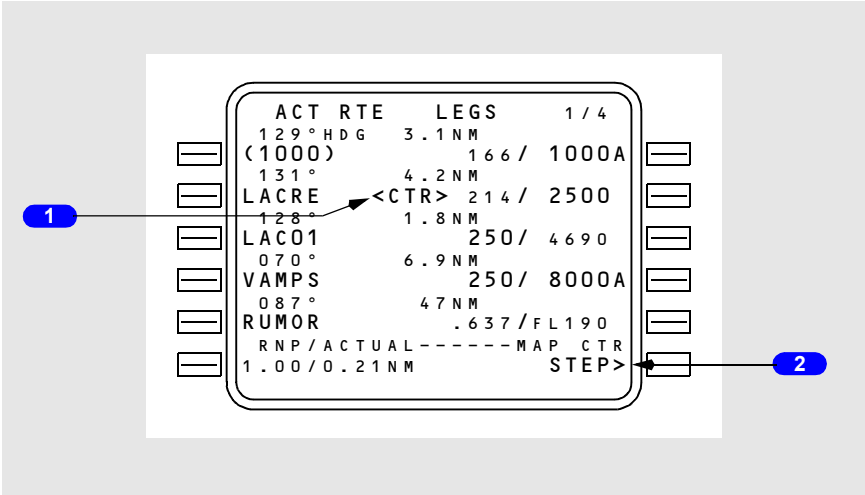

1 Map Center Label (<CTR>)

Identifies the waypoint around which the map display is centered.

Whenever the EFIS Mode selector is positioned to PLAN, the label is automatically displayed for the first geographically fixed waypoint on the displayed page.

2 STEP

Displayed on a CDU when PLAN is selected on the associated EFIS control panel. Replaces the RTE DATA or ACTIVATE prompt.

Push – moves the map center label to the next geographically fixed waypoint in the route.

Copyright © The Boeing Company. See title page for details.

Progress Page 1/X

The progress page provides general flight progress information along the route of flight such as:

- waypoints (last, active and next)
- waypoint ETA
- waypoint ATA
- distance to go information
- destination information
- altitude change points
- current wind
- fuel quantity

[Option – With flight number entry]
The page title displays the company flight number from the RTE page.

[Option – FMC U10.4A and earlier with flight number entry]

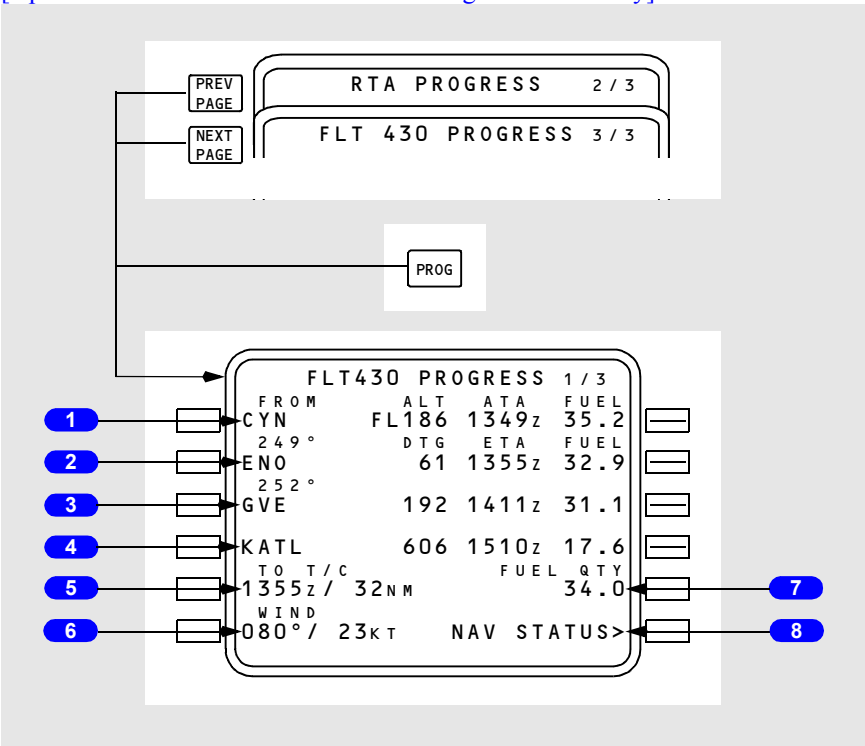

Copyright © The Boeing Company. See title page for details.

DO NOT USE FOR FLIGHT

[Option – FMC U10.5 and later with flight number entry]

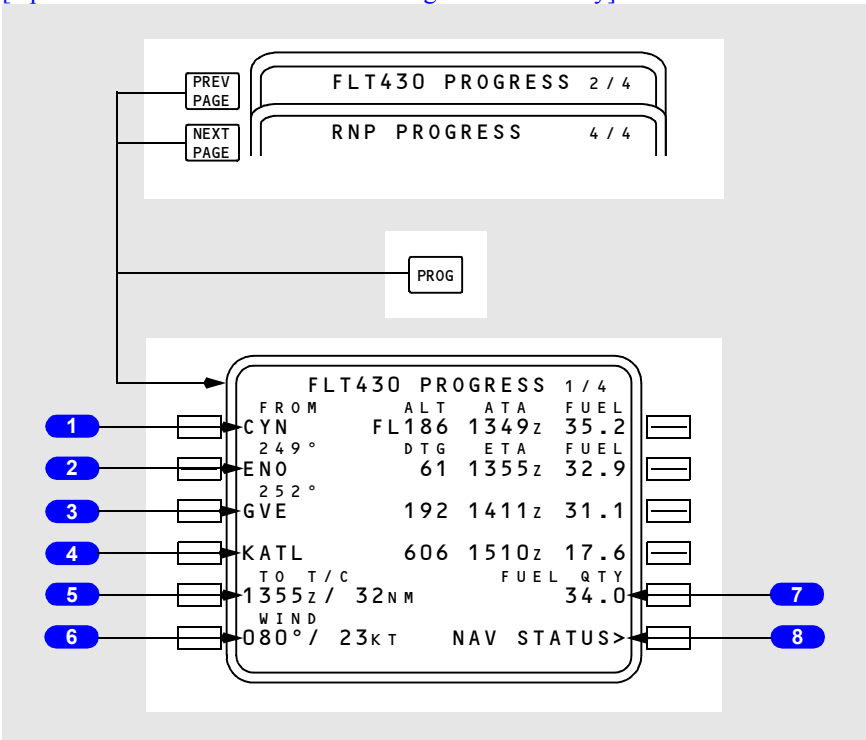

1 FROM

Displays the identifier of the last (FROM) waypoint, the altitude (ALT), the actual time of arrival (ATA), and the fuel at that waypoint.

2 Active Waypoint

Displays the identifier of the active waypoint, the flight plan course to the active waypoint, and distance–to–go (DTG) from present position to the active waypoint. Also displays the estimated time of arrival (ETA) and predicted fuel remaining at the active waypoint. The active waypoint is highlighted by reverse video.

3 Next Waypoint

Displays the identifier of the next waypoint which follows the active waypoint, the flight plan course for that leg, and flight plan distance–to–go (DTG) from present position to the next waypoint. Also displays the estimated time of arrival (ETA) and predicted fuel remaining at the next waypoint.

Copyright © The Boeing Company. See title page for details.

4 Destination

Displays the identifier of the destination airport (DEST) and flight plan distance–to–go (DTG) from present position to the destination. Also displays estimated time of arrival (ETA) and predicted fuel remaining at the destination.

When a route modification is in progress, the destination line label displays MOD. Performance predictions include the modification.

5 Altitude Change Point (TO XXXXX)

Displays ETA and distance to go to the following altitude change points as appropriate to phase of flight:

- TO T/C: to top of climb for the active climb
- TO STEP POINT: to the step point if a STEP TO entry is made on CRZ page
- TO T/D: to top of descent, if no STEP TO entry is made on CRZ page
- TO E/D: to the end of descent waypoint for an active path descent; blank if a path descent is not available.

6 WIND

Displays current true wind direction and speed.

7 Fuel Quantity (FUEL QTY)

Displays the present total fuel quantity remaining as obtained from the airplane fuel quantity indication system.

8 NAV STATUS

Push – displays the navigation status page.

Copyright © The Boeing Company. See title page for details.

DO NOT USE FOR FLIGHT

RTA Progress Page 2/3

[Option – FMC U10.4A and earlier]

RTA Progress page is used to initiate the required time of arrival (RTA) mode.

The RTA page provides advisory data on flight progress in the RTA mode and advises of control times such as recommended takeoff time to meet RTA.

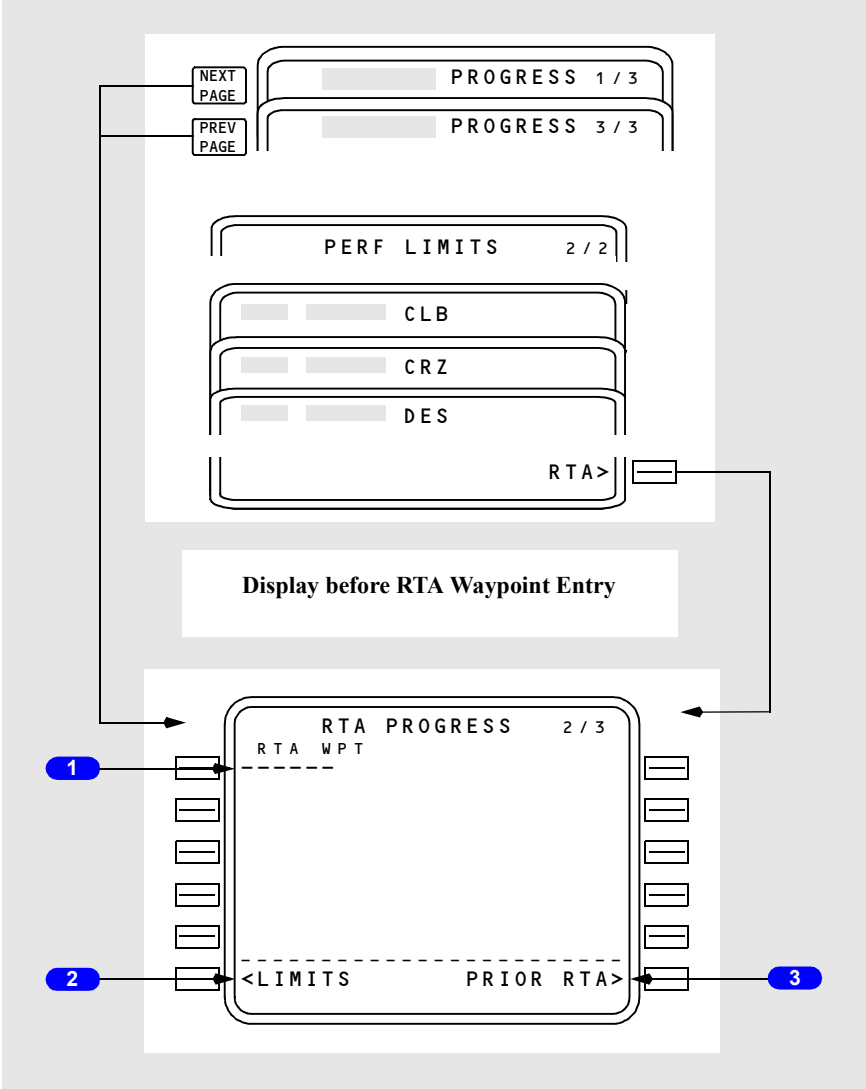

Copyright © The Boeing Company. See title page for details.

1 Required Time of Arrival Waypoint (RTA WPT)

Displays dashes when entry allowed.

2 LIMITS

Displays the PERF LIMITS page.

3 Prior RTA Waypoint (PRIOR RTA)

Prompt displayed when the RTA waypoint field contains dashes and a previous RTA waypoint is still in the flight plan; otherwise blank.

Push – displays last active RTA waypoint data.

Copyright © The Boeing Company. See title page for details.

DO NOT USE FOR FLIGHT

RTA Progress on Ground and in Flight

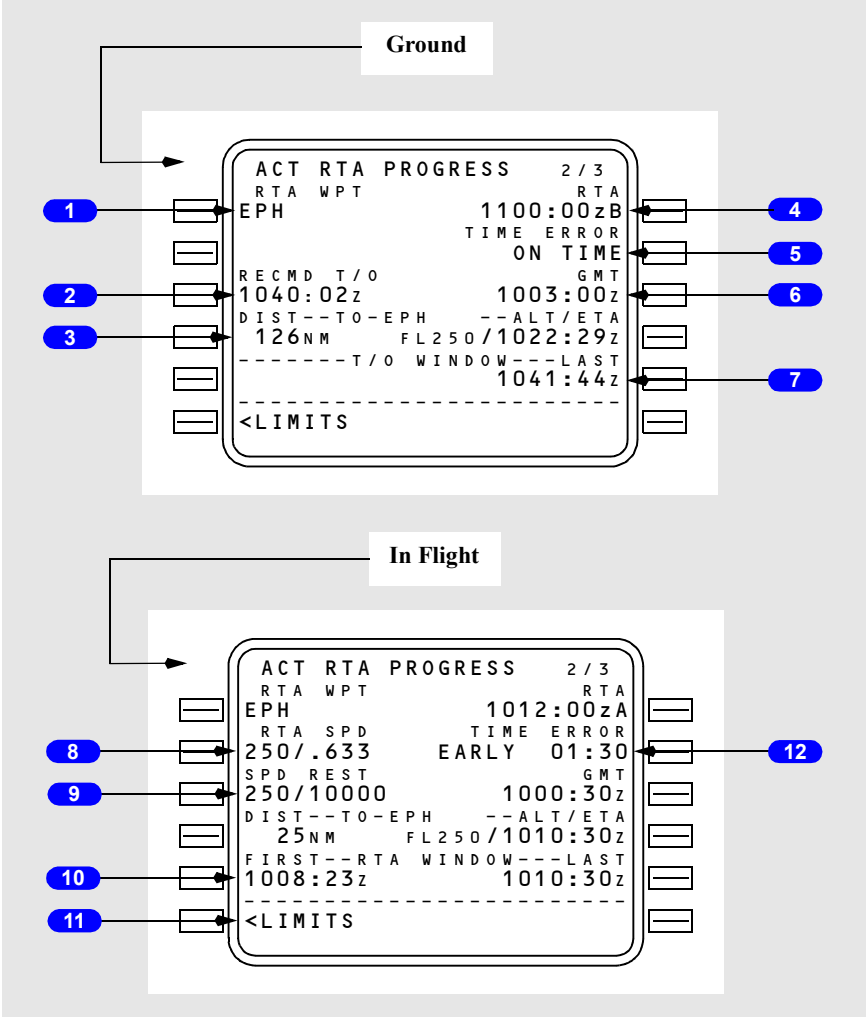

1 Required Time of Arrival Waypoint (RTA WPT)

Waypoint entry must be in flight plan or the CDU message NOT IN FLIGHT PLAN will be displayed.

Entering a valid waypoint will generate a MOD RTA PROGRESS page and illuminate the EXEC light.

Deletion of the RTA waypoint will create a MOD RTA PROGRESS page with all data blanked and EXEC light illuminated. Execution will exit the RTA mode.

Copyright © The Boeing Company. See title page for details.

Deletion of the RTA waypoint does not remove the waypoint from the flight plan.

Automatically clears the RTA waypoint and exits the RTA waypoint after sequencing the RTA waypoint out of the flight plan.

2 Recommended Takeoff Time (RECMD T/O)

Displays the recommended takeoff time to meet the planned RTA.

Time is based on entered Cost Index as well as the earliest and latest times to achieve RTA.

3 Distance To, Altitude, and ETA at the RTA Waypoint (DIST – – TO XXX – –ALT/ ETA)

Displays the distance to the RTA waypoint.

Displays the predicted altitude at the RTA waypoint.

Displays ETA at the RTA waypoint based on:

- immediate takeoff
- MIN/MAX speeds on PERF LIMITS page
- entered forecast winds.

4 Required Time of Arrival (RTA)

After RTA waypoint entry, initially displays current ETA based on the active flight plan and performance parameters at time of waypoint entry.

Desired RTA may be entered by overwriting displayed data.

Entry must be in one of the following forms:

- XXXXXX (hr/min/sec)
- XXXX (hr/min)
- XXXX.X (hr/min/tenths of min).

Entry of “A” after RTA specifies arrival time of at or after.

Entry of “B” after RTA specifies arrival time of at or before.

5 TIME ERROR

Displays the most recent time error in minutes and seconds up to a maximum of 59:59 minutes.

Displays ON TIME if GMT is within current T/O WINDOW.

Displays EARLY or LATE as appropriate if GMT is not within current T/O WINDOW.

Copyright © The Boeing Company. See title page for details.

DO NOT USE FOR FLIGHT

6 GMT

Displays the actual GMT.

7 Takeoff Window (– – – – – – – T/O WINDOW – – – LAST) or (FIRST – – T/O WINDOW – – – – – – – –)

Displays earliest and latest takeoff times to meet the planned RTA.

If the entered RTA time is an “At or After” time, only the FIRST field shall be displayed.

If the entered RTA time is an “At or Before” time, only the LAST field shall be displayed.

Times are based on minimum and maximum speeds on the PERF LIMITS page.

8 Required Time of Arrival Speed (RTA SPD)

Displays the target speed required to meet the planned RTA.

Same as speed displayed on RTA CLB, CRZ, or DES page.

Limited by MIN/MAX speeds on the PERF LIMITS page and the SPD REST line.

9 Speed Restriction (SPD REST)

Displays the current speed restriction affecting RTA progress.

10 Arrival Time Window (FIRST – – RTA WINDOW – – – LAST)

Displays earliest and latest achievable arrival times at the RTA waypoint.

Times based on MIN/MAX speeds on PERF LIMITS page, existing winds, and entered forecast winds.

11 LIMITS

Push – Displays PERF LIMITS page.

12 TIME ERROR

In flight, displays difference between the ETA and the RTA plus the TIME ERROR TOLERANCE on the PERF LIMITS page.

Copyright © The Boeing Company. See title page for details.

Progress Page 3/3

[Option – FMC U10.4A and earlier]

The progress page 3/3 displays wind, track, path, temperature, and speed data.

[Option – FMC U10.3 and later with GPS and flight number entry]

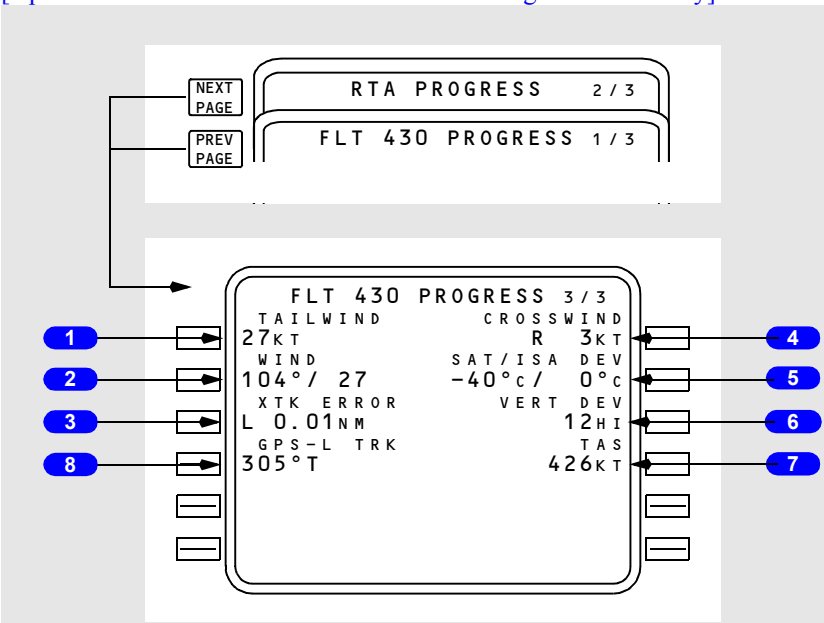

Copyright © The Boeing Company. See title page for details.

DO NOT USE FOR FLIGHT

[Option – FMC U10.3 and later with company data link, GPS, and flight number entry]

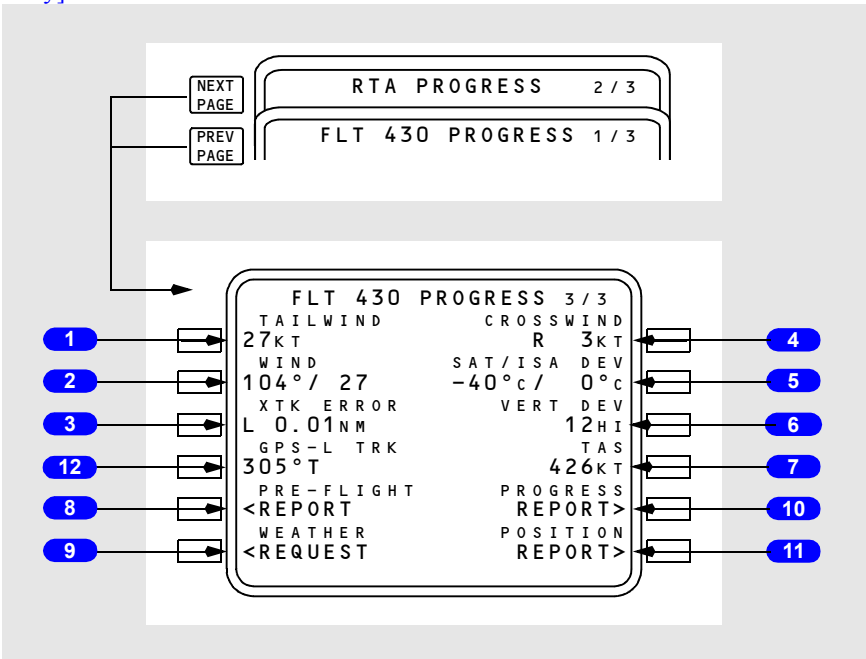

1 HEADWIND or TAILWIND

Displays the present headwind or tailwind component.

2 WIND

Displays the present true wind direction/speed.

3 Crosstrack Error (XTK ERROR)

[Option – FMC U10.3 and later]
Displays present cross–track error from the desired LNAV course.

Blank if error is greater than 99.9 nm.

4 CROSSWIND

Displays present crosswind component (left or right).

5 Static Air Temperature/ISA Deviation (SAT/ISA DEV)

Displays present SAT and the equivalent ISA deviation.

Copyright © The Boeing Company. See title page for details.

6 Vertical Descent Path Deviation (VERT DEV)

Displays present computed deviation (HI or LO) from the FMC vertical path.

Blank if descent not active or path not available.

7 TAS

Displays present TAS.

8 PRE–FLIGHT REPORT
[Option – With company data link]

Push – transmits downlink report of preflight data.

8 GPS–L TRK
[Option – FMC U10.3 and later with GPS]

Displays GPS track.

9 WEATHER REQUEST
[Option – With company data link]

Push – transmits a data link request for a weather uplink.

10 PROGRESS REPORT
[Option – With company data link]

Push – transmits a downlink report of progress data.

11 POSITION REPORT
[Option – With company data link]

Push – transmits a downlink report of position data.

12 GPS–L TRK
[Option – FMC U10.3 and later with GPS]

Displays GPS track.

Copyright © The Boeing Company. See title page for details.

DO NOT USE FOR FLIGHT

Progress Page 2/4

[Option – FMC U10.5 and later]

The progress page 2/4 displays wind, track, path, temperature, and speed data.

[Option – FMC U10.5 and later, with flight number entry, company data link and GPS]

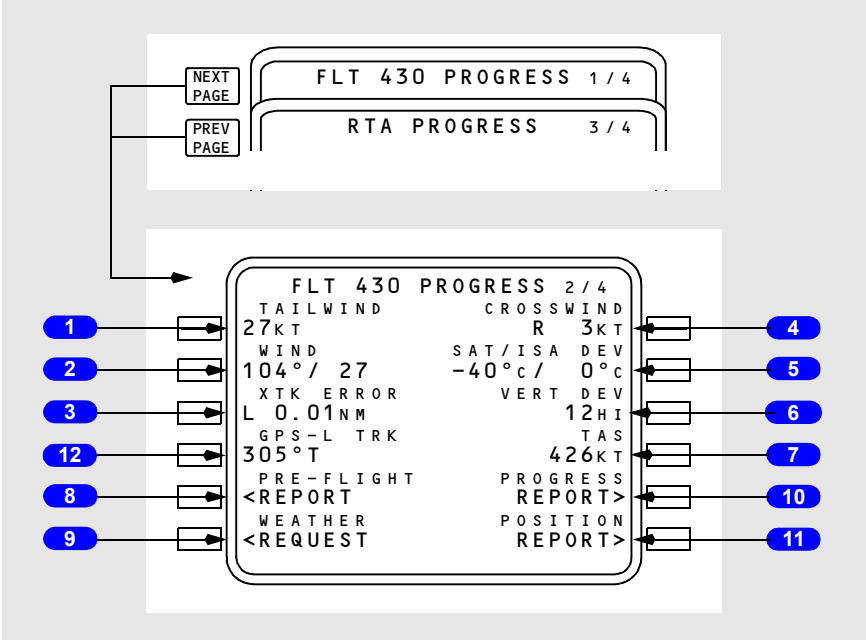

1 HEADWIND or TAILWIND

Displays the present headwind or tailwind component.

2 WIND

Displays the present true wind direction/speed.

3 Crosstrack Error (XTK ERROR)

Displays present cross–track error from the desired LNAV course.

Blank if error is greater than 99.9 nm.

4 CROSSWIND

Displays present crosswind component (left or right).

Copyright © The Boeing Company. See title page for details.

5 Static Air Temperature/ISA Deviation (SAT/ISA DEV)

Displays present SAT and the equivalent ISA deviation.

6 Vertical Descent Path Deviation (VERT DEV)

Displays present computed deviation (HI or LO) from the FMC vertical path.

Blank if descent not active or path not available.

7 TAS

Displays present TAS.

8 PRE–FLIGHT REPORT
[Option – With company data link]

Push – transmits downlink report of preflight data.

9 WEATHER REQUEST
[Option – With company data link]

Push – transmits a data link request for a weather uplink.

10 PROGRESS REPORT
[Option – With company data link]

Push – transmits a downlink report of progress data.

11 POSITION REPORT
[Option – With company data link]

Push – transmits a downlink report of position data.

12 GPS–L TRK
[Option – With GPS]

Displays GPS track.

Copyright © The Boeing Company. See title page for details.

DO NOT USE FOR FLIGHT

RTA Progress Page 3/4

[Option – FMC U10.5 and later]

RTA Progress page is used to initiate the required time of arrival (RTA) mode.

The RTA page provides advisory data on flight progress in the RTA mode and advises of control times such as recommended takeoff time to meet RTA.

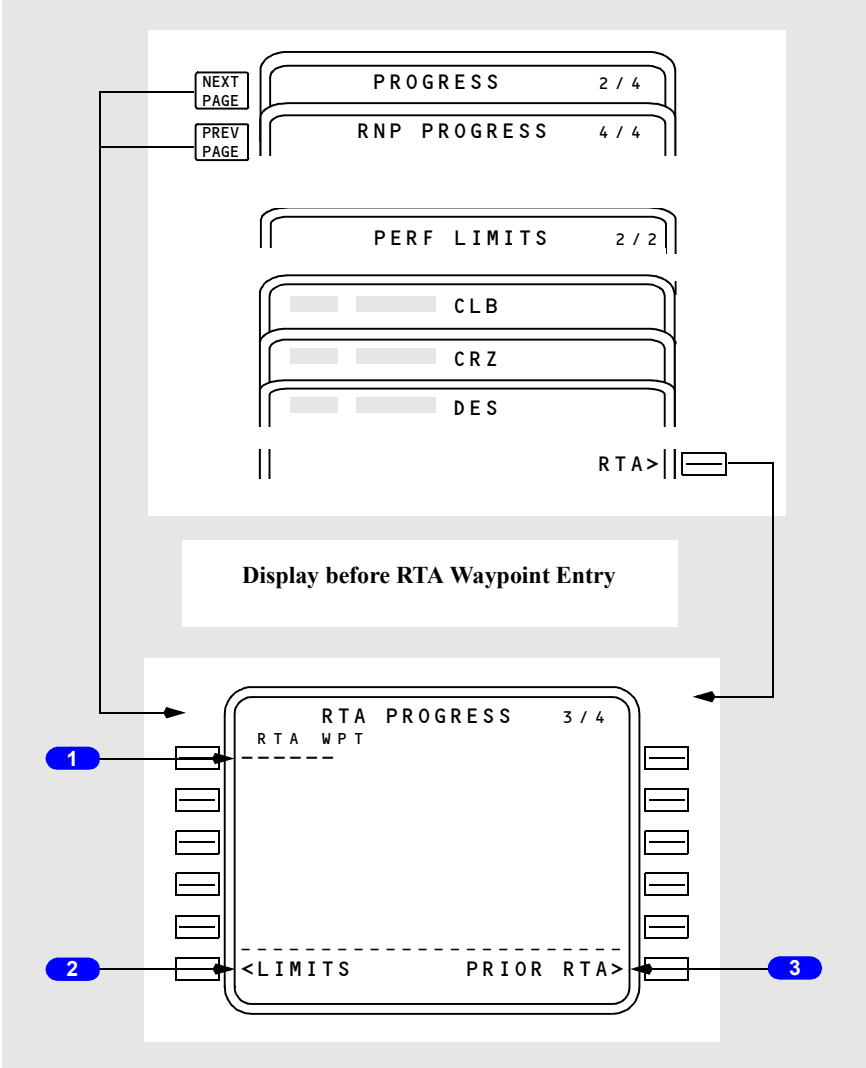

1 Required Time of Arrival Waypoint (RTA WPT)

Displays dashes when entry allowed.

Copyright © The Boeing Company. See title page for details.

2 LIMITS

Displays the PERF LIMITS page.

3 Prior RTA Waypoint (PRIOR RTA)

Prompt displayed when the RTA waypoint field contains dashes and a previous RTA waypoint is still in the flight plan; otherwise blank.

Push – displays last active RTA waypoint data.

Copyright © The Boeing Company. See title page for details.

DO NOT USE FOR FLIGHT

RTA Progress on Ground and in Flight

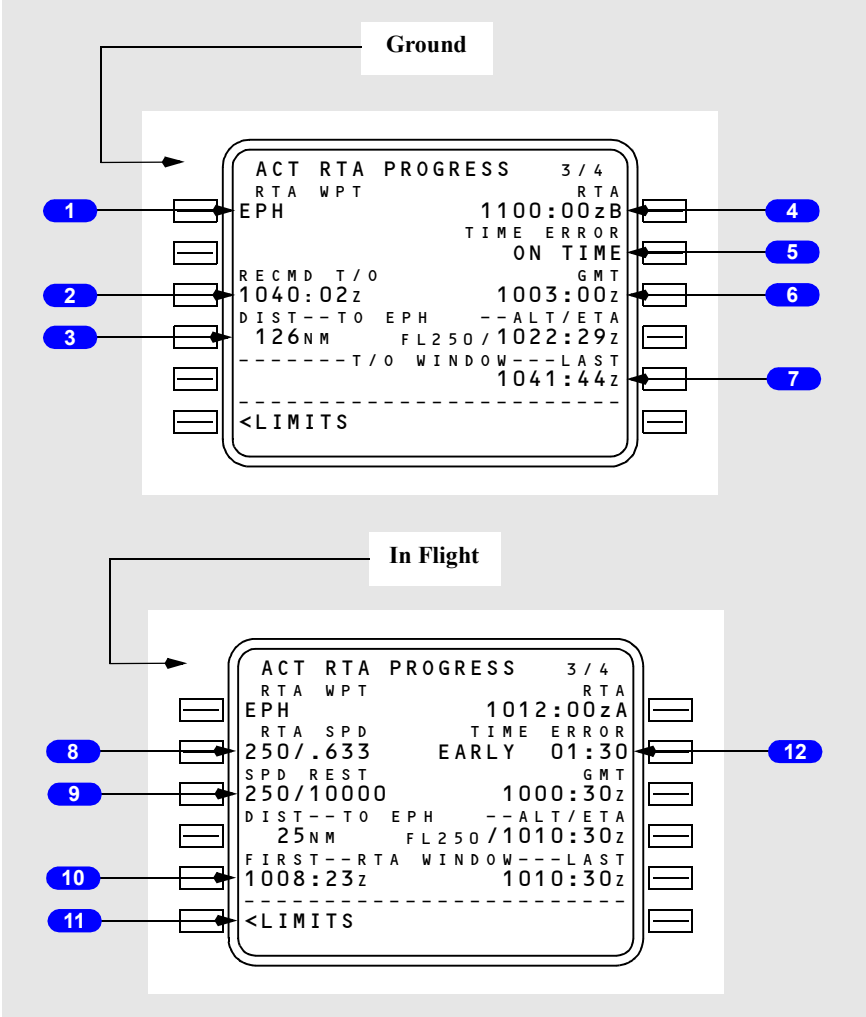

1 Required Time of Arrival Waypoint (RTA WPT)

Waypoint entry must be in flight plan or the CDU message NOT IN FLIGHT PLAN will be displayed.

Entering a valid waypoint will generate a MOD RTA PROGRESS page and illuminate the EXEC light.

Deletion of the RTA waypoint will create a MOD RTA PROGRESS page with all data blanked and EXEC light illuminated. Execution will exit the RTA mode.

Copyright © The Boeing Company. See title page for details.

Deletion of the RTA waypoint does not remove the waypoint from the flight plan.

Automatically clears the RTA waypoint and exits the RTA waypoint after sequencing the RTA waypoint out of the flight plan.

2 Recommended Takeoff Time (RECMD T/O)

Displays the recommended takeoff time (brake release time) to meet the planned RTA.

Time is based on entered Cost Index as well as the earliest and latest times to achieve RTA..

3 Distance To, Altitude, and ETA at the RTA Waypoint (DIST – – TO XXX – – ALT/ETA)

Displays the distance to the RTA waypoint.

Displays the predicted altitude at the RTA waypoint.

Displays ETA to the RTA waypoint based on:

- immediate takeoff
- MIN/MAX speeds on PERF LIMITS page
- entered forecast winds.

4 Required Time of Arrival (RTA)

After RTA waypoint entry, initially displays current ETA based on the active flight plan and performance parameters at time of waypoint entry.

Desired RTA may be entered by overwriting displayed data.

Entry must be in one of the following forms:

- XXXXXX (hr/min/sec)
- XXXX (hr/min)
- XXXX.X (hr/min/tenths of min).

Entry of “A” after RTA specifies arrival time of at or after.

Entry of “B” after RTA specifies arrival time of at or before.

5 TIME ERROR

Displays the most recent time error in minutes and seconds up to a maximum of 59:59 minutes.

Displays ON TIME if GMT is within current T/O WINDOW.

Displays EARLY or LATE as appropriate if GMT is not within current T/O WINDOW.

Copyright © The Boeing Company. See title page for details.

DO NOT USE FOR FLIGHT

6 GMT

Displays the actual GMT.

7 Takeoff Window (– – – – – – – T/O WINDOW – – – LAST) or (FIRST – – T/O WINDOW – – – – – – –)

Displays latest takeoff time to meet the planned RTA.

If the entered RTA time is “At or After” time, only the FIRST field shall be displayed.

If the entered RTA time is “At or Before” time, only the LAST field shall be displayed.

Time is based on minimum and maximum speeds on the PERF LIMITS page.

8 Required Time of Arrival Speed (RTA SPD)

Displays the target speed required to meet the planned RTA.

Same as speed displayed on RTA CLB, CRZ, or DES page.

Limited by MIN/MAX speeds on the PERF LIMITS page and the SPD REST line.

9 Speed Restriction (SPD REST)

Displays the current speed restriction affecting RTA progress.

10 Arrival Time Window (FIRST – – RTA WINDOW – – – LAST)

Displays earliest and latest achievable arrival times at the RTA waypoint.

Times based on MIN/MAX speeds on PERF LIMITS page, existing winds, and entered forecast winds.

11 LIMITS

Push – Displays PERF LIMITS page.

12 TIME ERROR

In flight, displays difference between the ETA and the RTA plus the TIME ERROR TOLERANCE on the PERF LIMITS page.

Copyright © The Boeing Company. See title page for details.

RNP Progress Page 4/4

[Option – FMC U10.5 and later]

Progress page 4/4 displays essential Required Navigation Performance (RNP) information. The items displayed include waypoint identifier, lateral and vertical RNP and ANP values, course, distance, glidepath, cross track error, speeds, altitudes and vertical deviation.

[Option – FMC U10.5 and later]

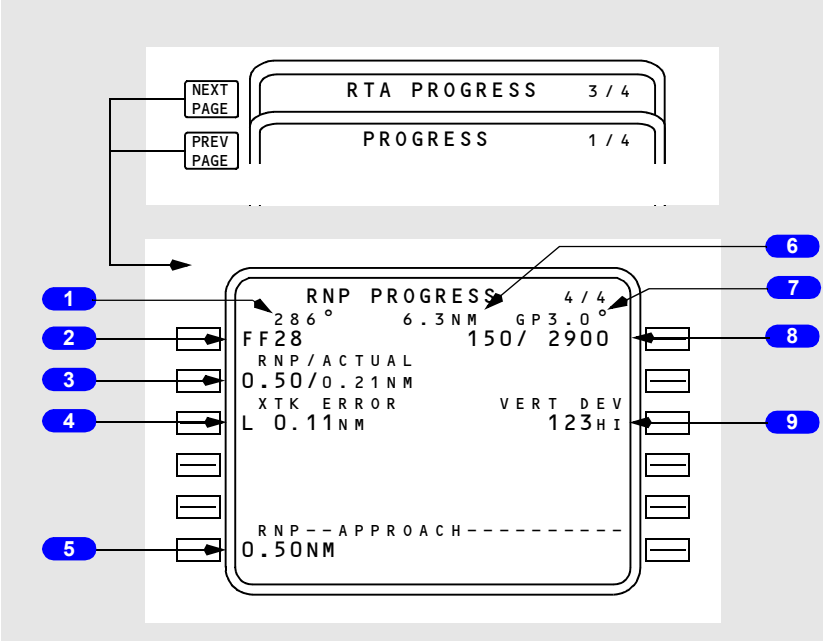

1 Leg Direction

The leg segment direction is displayed as the title of the waypoint line. Courses are displayed in magnetic (xxx°) or true (xxx° T). Directions to maintain an arc display the arc distance, the word ARC followed by the direction, and left or right (24 ARC L). The computed great circle route leg directions may be different than chart values. Heading leg segments to conditional waypoints are displayed as (xxx° HDG) and track leg segments are displayed as (xxx° TRK). Directions may be displayed as special procedural instructions, such as HOLD AT or PROC TURN.

Display is blank for an undefined course.

Copyright © The Boeing Company. See title page for details.

DO NOT USE FOR FLIGHT

2 Waypoint Identifier

Displays the next waypoint.

Same as displayed on the RTE LEGS page.

3 Actual RNP

Displays the actual RNP value for lateral navigation.

Same as displayed the POS SHIFT page.

4 Crosstrack Error (XTK ERROR)

Displays present cross–track error from the desired LNAV course.

L or R indicates left or right of course.

Blank if error is greater than 99.9 nm.

5 Lateral RNP (Approach)

Displays the lowest applicable RNP for the approach.

Displays in large font for manually entered RNP.

Displays in small font for values provided by the navigation database.

6 Distance To Go

Displays the distance remaining to the next waypoint.

7 Glidepath

Displays the FMC computed glidepath for the approach.

8 Waypoint Speed/Altitude

Displays waypoint speed or altitude constraints in large font.

Displays FMC predicted values in small font when no restrictions have been specified.

9 Vertical Deviation

Displays present vertical deviation from the FMC computed glidepath.

Copyright © The Boeing Company. See title page for details.

N1 Limit Page

[Option – FMC U10.1 and later]
This section describes the in–flight version of the N1 LIMIT page. See the FMC Preflight section for a description of the preflight version of the N1 LIMIT page.

Normally, N1 limits are automatically specified. Pilot selection of other limits is allowed.

Pilot selection of a reduced climb mode does not change the automatic selection for other phases of flight.

Pilot selected mode is automatically replaced by AUTO selection when the autopilot next changes vertical mode.

The active thrust limit is used by the autopilot and is displayed on the thrust mode display.

[Option – FMC U10.1 and later]

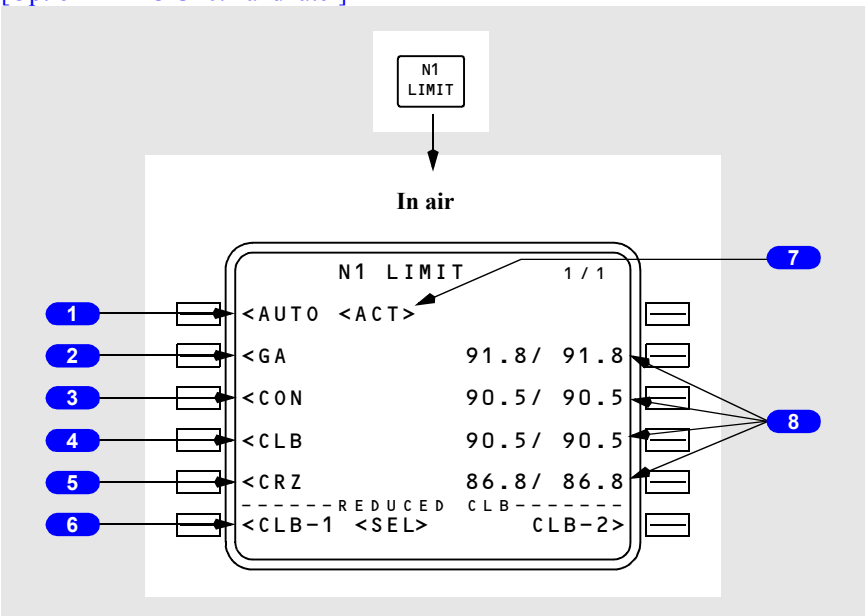

1 AUTO

Push – selects automatic computation of N1 limits for all phases of flight.

2 Go Around (GA)

Push – selects the go–around thrust limit.

Copyright © The Boeing Company. See title page for details.

DO NOT USE FOR FLIGHT

3 Continuous (CON)

Push – selects the maximum continuous thrust limit.

4 Climb (CLB)

Push – changes the thrust mode from AUTO to the active climb thrust, i.e. CLB, CLB–1, or CLB–2.

5 Cruise (CRZ)

Push – selects the cruise thrust limit.

6 Reduced Climb (REDUCED–CLB)

Push – selects either of two reduced climb thrust modes.

CLB–1 provides a climb limit reduced by 3% N1 (approximately 10% thrust).

CLB–2 provides a climb limit reduced by 6% N1 (approximately 20% thrust).

The reduced climb N1 value is displayed on the CLB pages.

If either mode is <SEL>, deletion allows return to full rated climb thrust.

Any reduced climb selection is automatically deleted above 15,000 feet.

Note: If a reduced thrust takeoff has been specified on the TAKEOFF REF page, the FMC will re-compute CLB–1 and CLB–2 values as required to avoid a climb N1 value greater than the reduced thrust takeoff N1 value.

7 <ACT> STATUS LABEL

Identifies the active N1 thrust limit.

8 N1

Displays the N1 for individual thrust limits based on present conditions and bleed air configuration.

If CLB–1 or CLB–2 is selected, the N1% for CLB and the N1 cursors still display values for full rated climb.

Copyright © The Boeing Company. See title page for details.

Engine Out Climb

Engine out climb advisory data is available on the CLB page. Engine out data is also available with both engines operating. The engine out climb phase automatically transitions to the engine out cruise phase when reaching the cruise altitude.

Engine Out Climb Page

Displays advisory information for an engine inoperative condition. Once the page is selected, it cannot be executed.

[Option – FMC U10.3 and later]

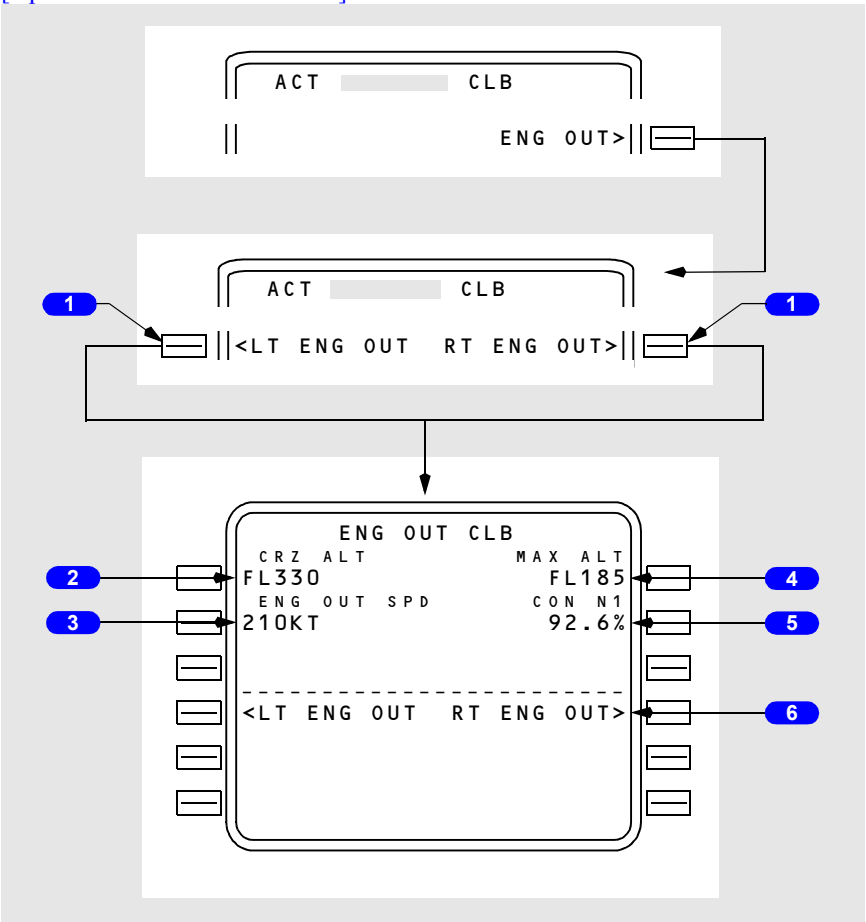

1 Engine Out Selection (LT ENG OUT RT ENG OUT)

Displayed after selection of ENG OUT prompt.

Copyright © The Boeing Company. See title page for details.

DO NOT USE FOR FLIGHT

2 Cruise Altitude (CRZ ALT)

[Option – FMC U10.3 and later]
Displays the current active cruise altitude. Value is forwarded from either the PERF INIT, CRZ, CRZ CLB, or CRZ DES pages. Manual entry not allowed.

3 Engine Out Speed (ENG OUT SPD)
[Option – FMC U10.3 and later]

Displays the engine out climb speed.

4 Maximum Altitude (MAX ALT)

Displays the maximum altitude at which company specified rate of climb can be achieved using one engine at maximum continuous thrust.

After page selection, the FMC accounts for wing and engine anti–ice, air conditioning and engine bleed of the operating engine.

5 Continuous N1 (CON N1)
[Option – FMC U10.3 and later]

Displays the N1 for maximum continuous thrust.

6 ENG OUT

Reverse highlights the selected engine out.

Copyright © The Boeing Company. See title page for details.

Air Turnback

Arrivals Page

During a turn–back situation, the crew requires quick access to the arrivals information for the origin airport. The departure/arrivals index and arrivals page provide access without changing the destination on the route page. See Chapter 11, Section 43 for additional information on the arrivals page.

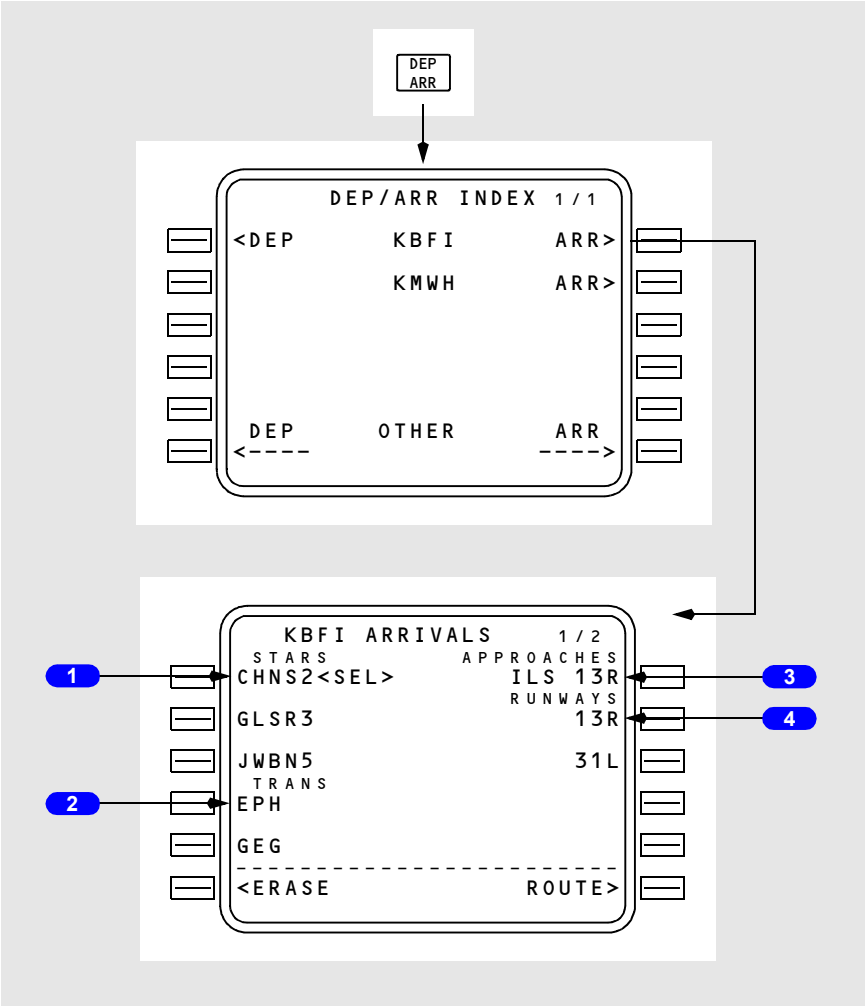

1 Standard Terminal Arrival Routes (STARS)

Displays STARS for the origin airport.

Copyright © The Boeing Company. See title page for details.

DO NOT USE FOR FLIGHT

2 Transitions (TRANS)

Displays transitions for the origin airport.

3 APPROACHES

Displays approaches for the origin airport.

4 RUNWAYS

Displays runways for the origin airport.

Copyright © The Boeing Company. See title page for details.

Introduction

The cruise phase automatically begins when the top of climb is reached.

During cruise, the primary FMC pages are:

- RTE LEGS
- PROGRESS
- CRZ.

The RTE LEGS pages are used to manage route restrictions and modify the route. The PROGRESS pages display flight progress information. RTA requirements are also specified on the PROGRESS pages. The CRZ pages display VNAV related information. Other pages include:

- POS REF page – verifies the FMC position (refer to Section 40 of this chapter)
- POS SHIFT page – permits selection of preferred position from list of references
- RTE DATA page – displays progress data for each waypoint on the RTE LEGS page. Displays wind data for cruise waypoints.
- REF NAV DATA page – displays information about waypoints, navaids, airports, or runways
- LATERAL OFFSET page – permits selection of a route offset
- FIX INFO page – displays information about waypoints, and can be used to create new waypoints and fixes
- SELECT DESIRED WAYPOINT page – permits selection of the desired waypoint from a list of duplicate named waypoints
- NAV STATUS page – displays information about available navigation aids.

The only cruise mode automatic page changes are the transition from climb to cruise at the top of climb point and from cruise to descent at the top of descent point.

LNAV Modifications

This section presents the normal techniques for modifying the route. The modifications include:

- adding and deleting waypoints
- resequencing waypoints
- linking discontinuities
- intercepting a course.

Copyright © The Boeing Company. See title page for details.

DO NOT USE FOR FLIGHT

RTE LEGS Page Modifications

When modifications are made to the RTE LEGS page, several automatic prompt or identifying features assist in managing and executing the modifications, such as:

- ERASE
- INTC CRS.

A waypoint can be added to the route whenever necessary.

The new waypoint must first be placed into the CDU scratchpad. Existing waypoints can be copied from a RTE LEGS page into the scratchpad by pushing the line select key adjacent to the desired waypoint.

The new waypoint is then inserted into the route at the desired sequence point by pushing the line select key adjacent to the desired location for the new waypoint. Using the NEXT PAGE/PREV PAGE function keys to select the desired location does not alter the CDU scratchpad. The new entry automatically links to the preceding waypoint via a direct route. Placing the new waypoint into the active waypoint line is a special case and is discussed under Intercept Course in this section.

All new waypoints, except along track waypoints, cause a route discontinuity between the new waypoint and the following waypoint.

Note: If the FMC NAV database contains a HOLD pattern at the FAF, executing a database approach with a procedure turn and then executing a HOLD at the same FAF, using any inbound course, may cause a discontinuity between the FAF and the procedure turn. If the discontinuity is removed, LNAV guidance is available to fly the approach from the published holding pattern. LNAV guidance is not available to fly the published procedure turn.

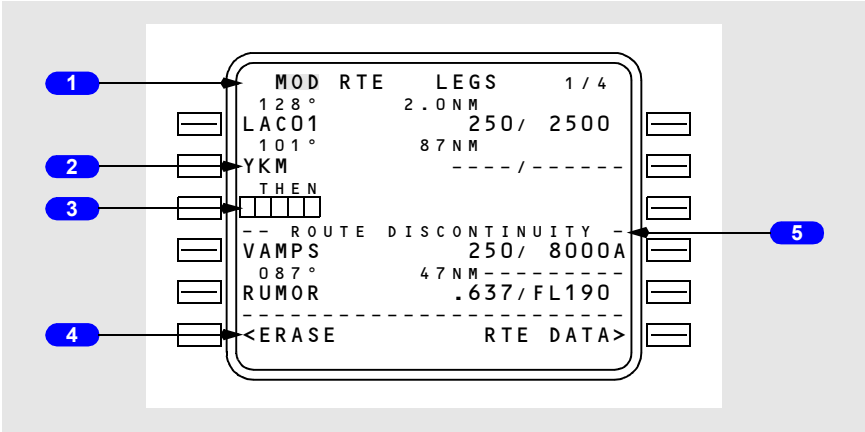

Copyright © The Boeing Company. See title page for details.

1 Page Title

When the page is modified, MOD appears in front of the title in reverse highlighting. This means the route is now altered. The MOD title also shows that the modifications are not yet executed and can be removed using the ERASE prompt.

2 Modified Waypoint

YKM waypoint is entered into the route between LAC01 and VAMPS. This modification creates a route discontinuity.

3 Discontinuity Waypoint

Box prompts indicate the requirement to link the route by entering a route waypoint into the discontinuity waypoint position.

4 ERASE

The ERASE prompt is displayed when the first modification is entered. The prompt remains on the page until the modifications are erased or executed. Selecting ERASE removes all modifications and restores all active data.

5 Discontinuity Header

Indicates that the route is not continuous. Distance to destination on the PROGRESS page is not correct.

Copyright © The Boeing Company. See title page for details.

DO NOT USE FOR FLIGHT

Progress Page

[Option – With flight number entry]

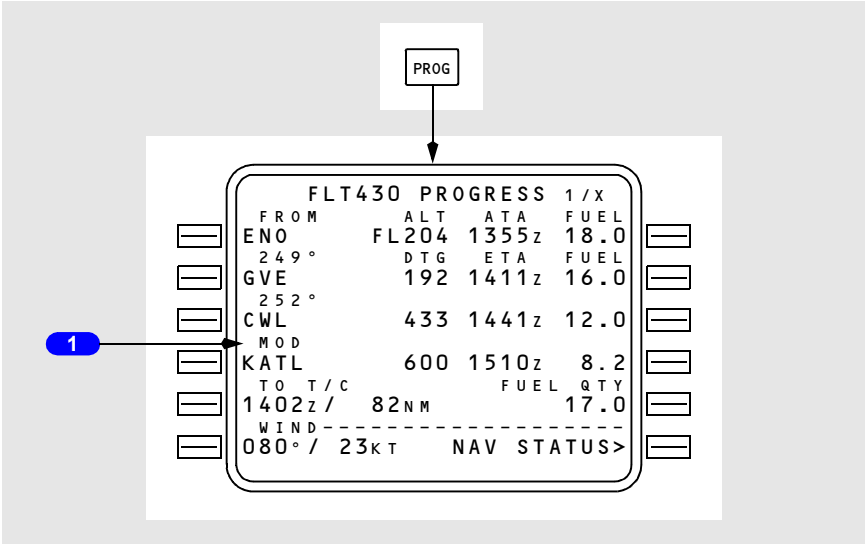

1 Modified (MOD)

Displays MOD when the route is being modified.

Line data is valid for the modified route.

Deleting Waypoints

Waypoints can be removed from the RTE LEGS page. There are two normal methods to remove a waypoint:

- delete the waypoint using the DEL function key (not possible for the active waypoint and some conditional waypoints)
- resequence the route by moving a down–route waypoint up in the sequence and automatically removing all waypoints that are between.

During the deletion process, all of the route prior to the deletion point remains unchanged. Removing a waypoint using the DEL function key causes a route discontinuity to replace the deleted waypoint.

Copyright © The Boeing Company. See title page for details.

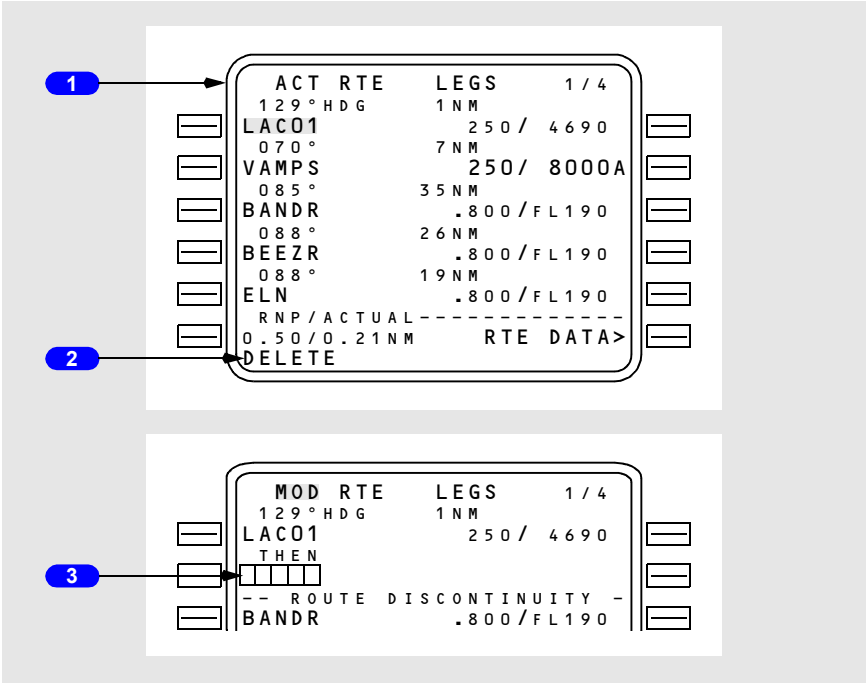

1 Active Route

The existing route shows VAMPS followed by BANDR, BEEZR, and ELN.

2 DELETE Entry

Push the DEL key to arm the delete function. DELETE is displayed in the scratchpad.

3 Delete VAMPS

With DELETE displayed in the scratchpad, push the line select key left of VAMPS to delete the waypoint. Box prompts replace VAMPS and a route discontinuity follows the box prompts.

Copyright © The Boeing Company. See title page for details.

DO NOT USE FOR FLIGHT

Resequencing Waypoints

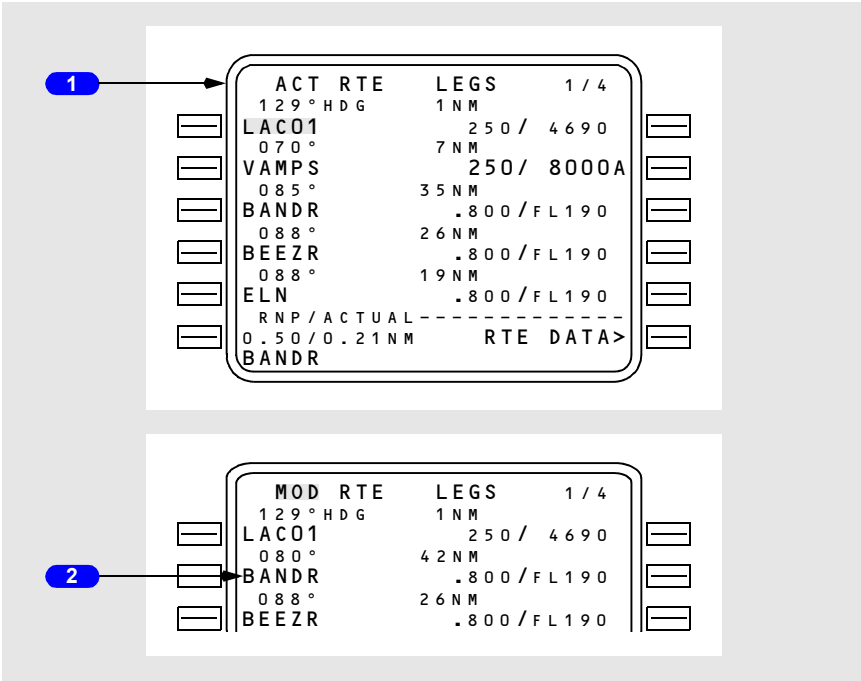

1 Active Route

The existing route shows VAMPS followed by BANDR, BEEZR, and ELN. The airplane must fly direct from LAC01 to BANDR. The BANDR waypoint is copied into the scratchpad.

2 Resequence BANDR

BANDR is transferred to the waypoint following LAC01. VAMPS is removed, and the route remains continuous.

Copyright © The Boeing Company. See title page for details.

Leg Bypass

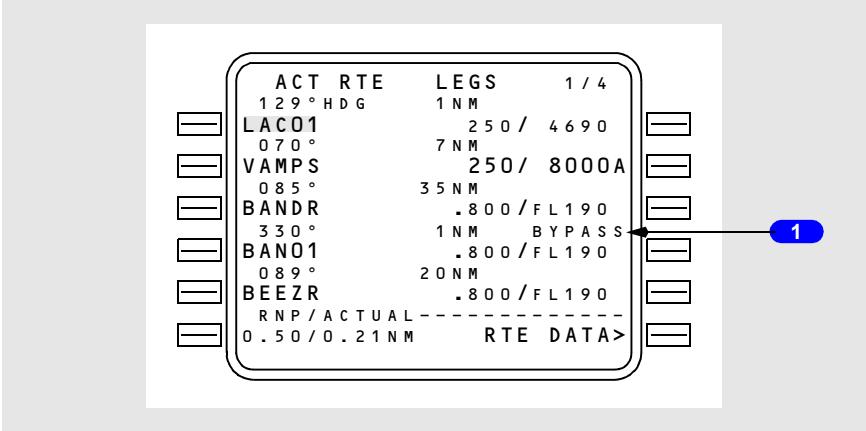

1 Bypass Notification

A waypoint (BAN01) has been entered into the route which is very close to another route waypoint (BANDR). It is impossible for the airplane to turn and capture the leg between BANDR and BAN01, so a bypass is noted.

Turn construction is based upon FMC criteria which assume that LNAV is engaged. Normal turn construction may not be possible under certain combinations of airspeed, short leg length, and a significant change in leg direction. If normal turn construction cannot provide a continuous path, the FMC bypasses the affected leg and uses alternative turn construction to intercept the leg to the subsequent waypoint. When the bypass is for the active waypoint, the waypoint remains active until the airplane passes abeam.

Any mandatory altitude–crossing restriction for the bypass waypoint is still observed if VNAV is engaged, based on passing abeam the waypoint.

If a triple bypass condition occurs (bypass of three consecutive legs), a route discontinuity will be inserted.

Removing Discontinuities

A discontinuity exists when the FMC is unable to determine the route leg following a waypoint. Discontinuities are removed by linking the route segment following the discontinuity to the route segment preceding the discontinuity.

The next desired waypoint from the subsequent route is copied into the CDU scratchpad and entered into the discontinuity, just as when adding a waypoint.

Copyright © The Boeing Company. See title page for details.

DO NOT USE FOR FLIGHT

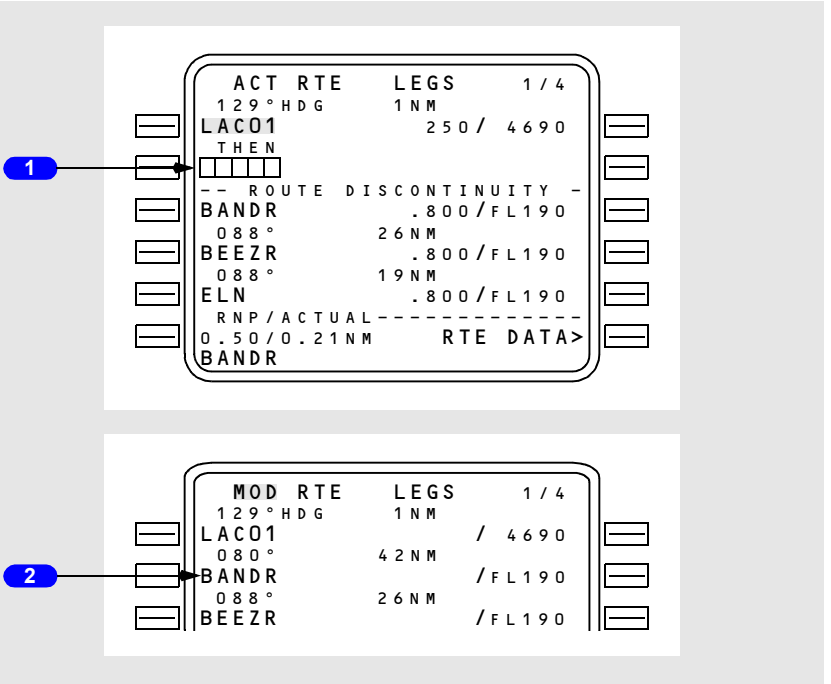

1 ROUTE DISCONTINUITY

The active route shows a discontinuity. The airplane must fly direct from LAC01 to BANDR. The BANDR waypoint is copied into the scratchpad in preparation to remove the discontinuity. Any waypoint from the route can be copied into the scratchpad to remove the discontinuity.

2 Continuous Route

BANDR is copied into the box prompts to remove the discontinuity.

Entering a waypoint which does not already exist on the route moves the discontinuity one waypoint farther down the route.

Copyright © The Boeing Company. See title page for details.

Direct To and Intercept Course

To fly direct to a waypoint or intercept a course to a waypoint, enter the waypoint name on RTE LEGS page 1 active waypoint line. The INTC CRS prompt displays in line 6R. The example shows the result with YKM entered into the active waypoint line.

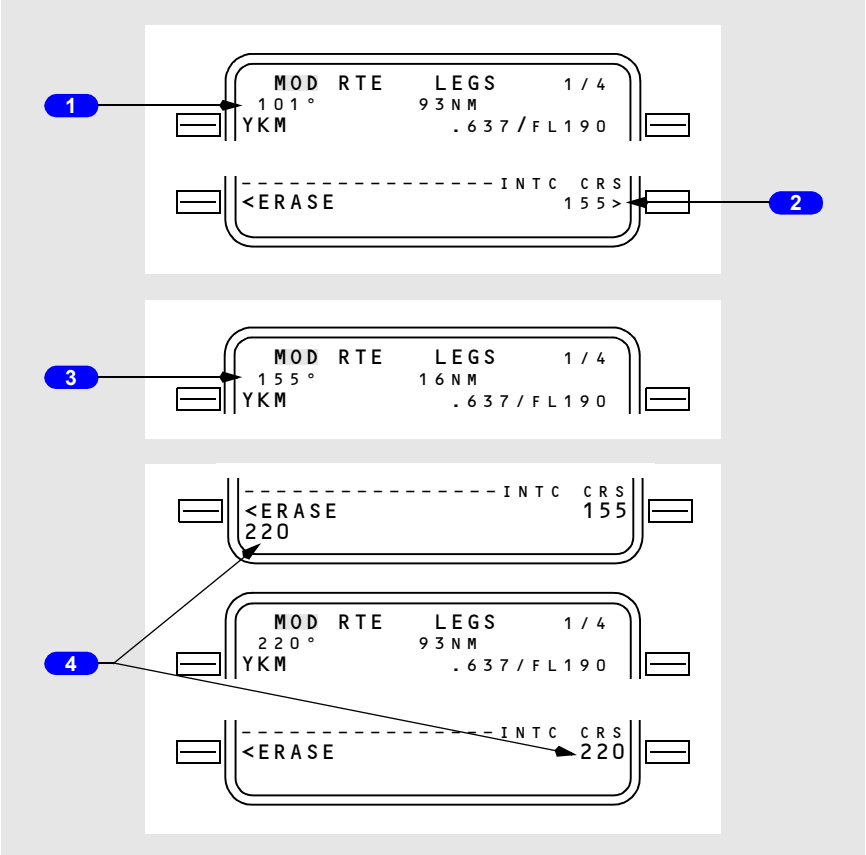

1 Direct Course

Direct course from airplane present position to entered waypoint.

Execute to proceed direct to active waypoint.

2 Intercept Course (INTC CRS)

Push – puts displayed course (155) into active waypoint leg direction. Enables intercept course function.

Displayed whenever the active waypoint name is modified.

Copyright © The Boeing Company. See title page for details.

DO NOT USE FOR FLIGHT

Displays flight plan leg direction to entered waypoint in small font. Displays dashes if entered waypoint was not in the flight plan.

Valid input is any course from 000 through 360. May be changed until executed. Entered or selected value displays in large font.

3 Leg Direction

Displays the course inbound to the active waypoint after selecting the course displayed in the INTC CRS line.

4 Intercept Course (INTC CRS) – Change

Enter the inbound intercept course to the modified waypoint in the scratchpad.

Select the INTC CRS line to change the leg direction.

The example shows 220° intercept course to YKM entered in the INTC CRS line.

Copyright © The Boeing Company. See title page for details.

DIR INTC Key
[Option – CDU]

Proceeding direct to a waypoint or intercepting a course to a waypoint may also be accomplished by using the direct intercept (DIR INTC) mode select key. Pushing the DIR INTC key adds box prompt options to the bottom of the ACT RTE LEGS page.

Using line select or manual entry, the desired waypoint is entered into the scratchpad. The waypoint is then moved into the appropriate boxes. Subsequent operations are identical to those described in the Intercept Course section.

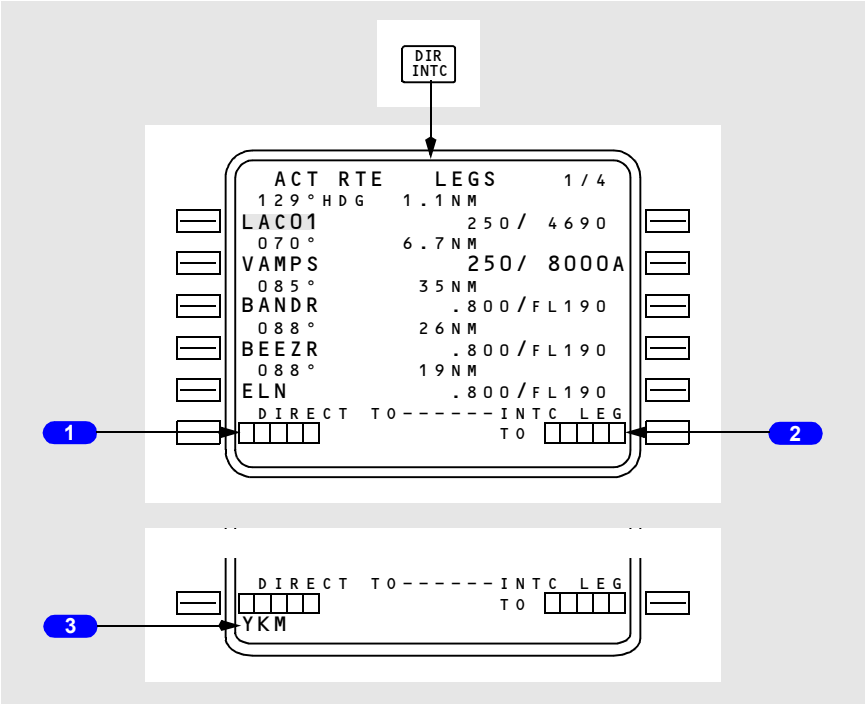

1 Direct To Boxes

Entering the desired waypoint in these boxes establishes a course direct to the waypoint and makes that waypoint the active waypoint.

2 Intercept Leg To Boxes

Entering the desired waypoint in these boxes allows a course to be specified to the waypoint and makes that waypoint the active waypoint.

Copyright © The Boeing Company. See title page for details.

DO NOT USE FOR FLIGHT

3 Scratchpad Entry

The desired waypoint is entered into the appropriate boxes.

Copyright © The Boeing Company. See title page for details.

Abeam Points

[Option]

When a direct–to modification bypasses existing route waypoints, these bypassed points can be projected onto the new route as abeam points. Abeam points are perpendicular to the bypassed waypoints.

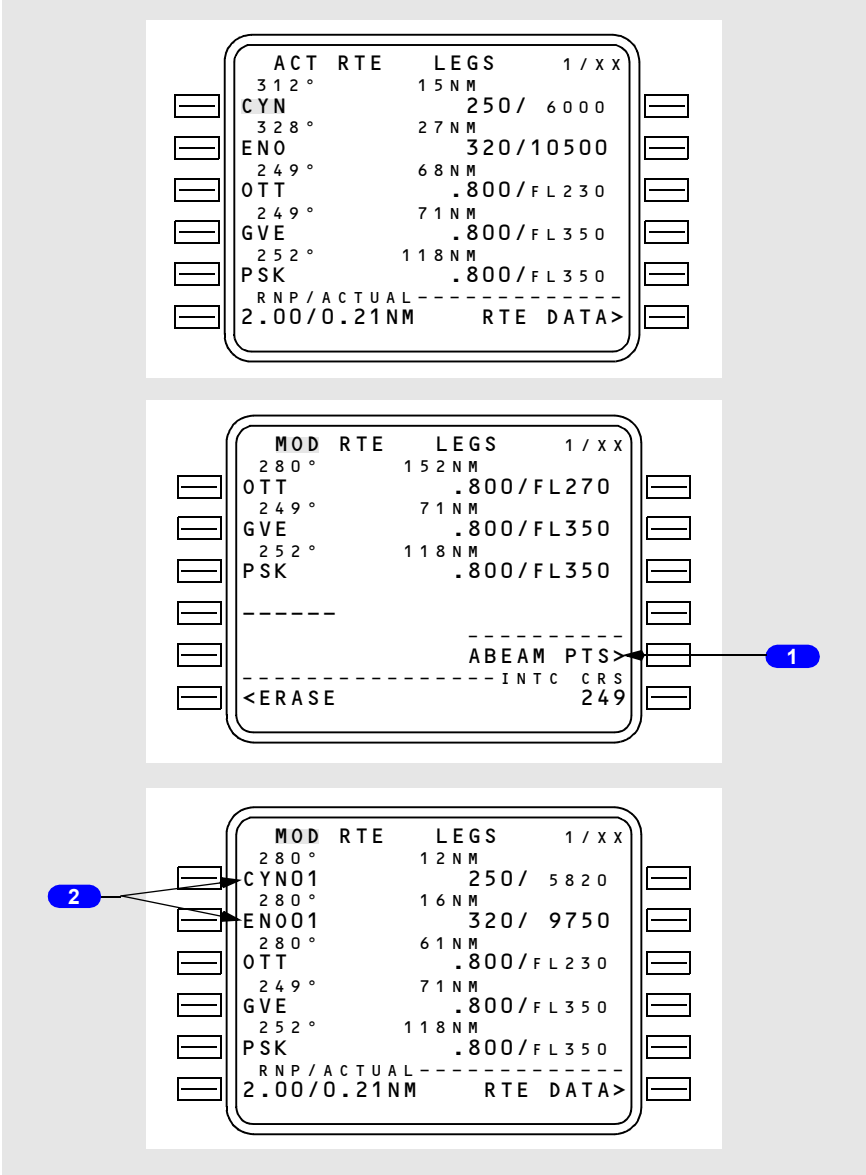

Copyright © The Boeing Company. See title page for details.

DO NOT USE FOR FLIGHT

1 Abeam Points (ABEAM PTS)

Selecting the prompt permits the retention of waypoints following a direct–to modification. The FMC creates and displays points on the new route which are abeam the waypoints bypassed by the route modification.

In the example, the route has been modified to proceed direct to OTT. This modification bypasses CYN and ENO.

2 Abeam Waypoints

CYN01 and ENO01 have been created. Data and status corresponding to the parent waypoints is passed to the abeam waypoints. If abeam distance is less than 100 nm, only the wind data is passed to the abeam waypoint.

The following diagram depicts the situation.

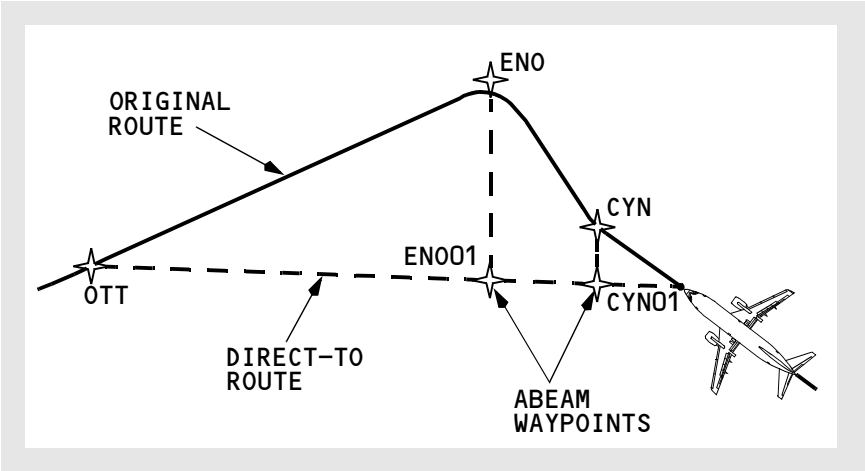

[Option – FMC U10.3 and later]
The ABEAM PTS prompt will not appear if no abeam waypoints are possible or if selection would increase the total number of waypoints to more than 150.

Abeam waypoints will not be generated for floating (non–fixed) waypoints; if the abeam distance exceeds 700 nm; or if the abeam waypoint would fall within 10 nm of either the present position or the direct–to waypoint.

If two or more identical (within 1 nm of each other) abeam waypoints are generated, only one will be designated.

Copyright © The Boeing Company. See title page for details.

Select Desired Waypoint Page

When a waypoint identifier is not unique (other database waypoints have the same name), a selection of which geographical location to use must be made before the waypoint can be used in the route. The SELECT DESIRED WPT page is automatically displayed when the FMC encounters more than one location for the same waypoint name after a waypoint entry.

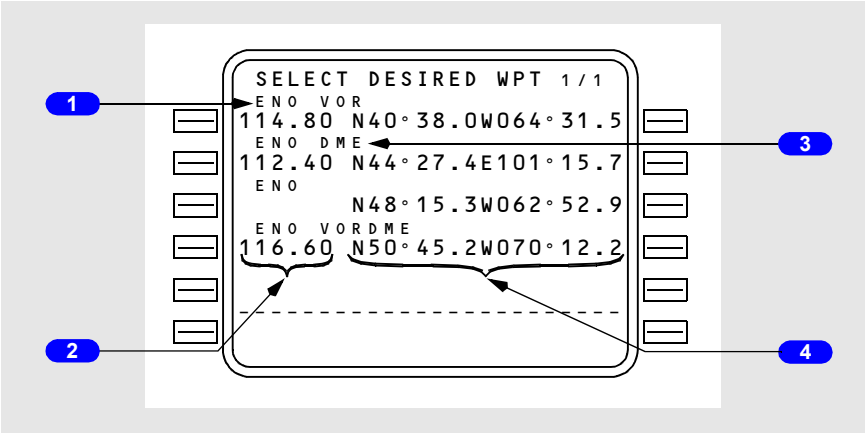

1 Identifier

Displays the identifiers for the duplicate named waypoints. Select the proper waypoint by pushing the appropriate left or right line select key. This page is automatically removed after a waypoint is selected.

2 Frequency

Displays the frequency of the navaid.

Blank if the waypoint is not a navaid.

3 Type

Shows type of navaid.

Blank if the waypoint is not a navaid.

4 Latitude/Longitude

The latitude/longitude is displayed for each duplicate name.

Copyright © The Boeing Company. See title page for details.

DO NOT USE FOR FLIGHT

Lateral Offset

A lateral offset may be specified up to 99.9 nautical miles left or right of course. The OFFSET prompt is displayed on the INIT/REF INDEX page and in flight on the RTE page. Selection displays the LATERAL OFFSET (or ACT LATERAL OFFSET page if an offset already exists).

Some legs are invalid for offset. These include:

- End of flight plan waypoint
- Discontinuity
- Beginning of approach transition
- Approach procedure
- DME arc
- Heading leg
- Holding pattern (except PPOS)
- Certain legs containing flyover waypoints
- Course change greater than 135 degrees
- Preplanned termination waypoint.

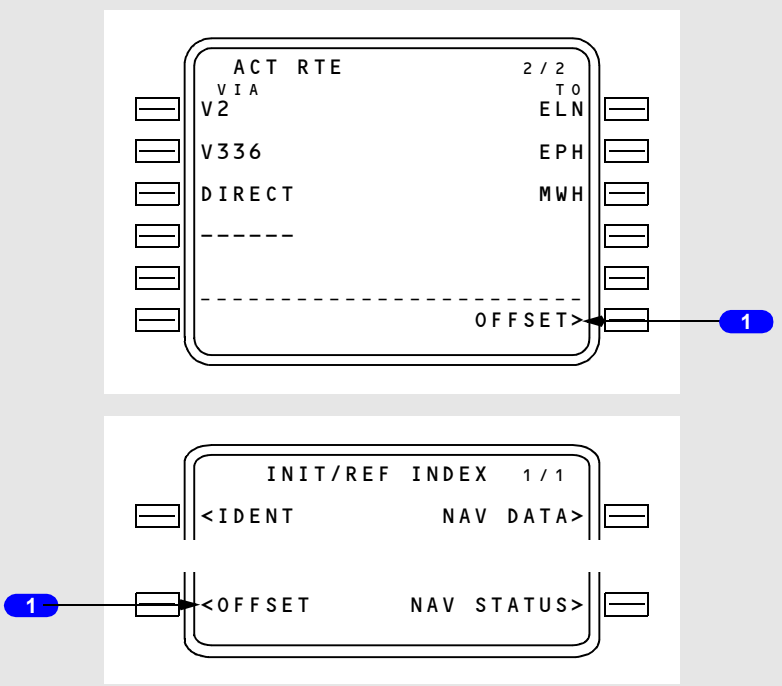

Copyright © The Boeing Company. See title page for details.

1 OFFSET

Selection displays the lateral offset page.

Lateral Offset Page

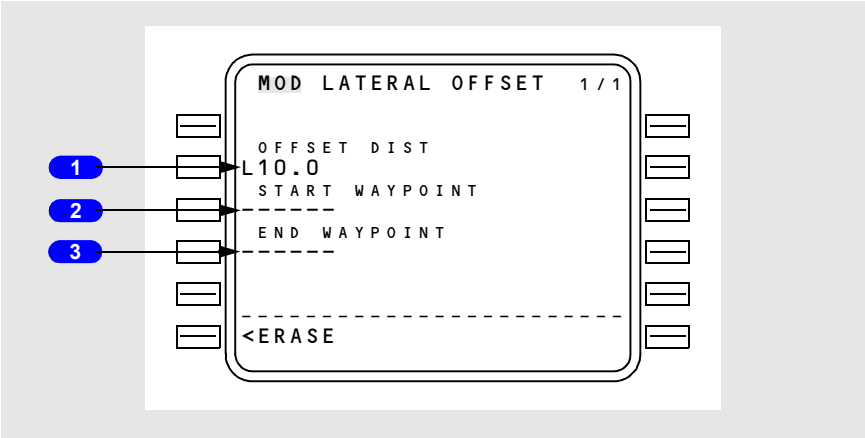

1 Offset Distance (OFFSET DIST)

The desired lateral offset distance is entered on line 2L In the example, the 10.0 nm offset left of course could be entered L10.0, L10, 10.0L, or 10L.

Entry results in display of start and end waypoint fields.

2 START WAYPOINT

The waypoint at which the offset is to begin may be entered (up to 6 characters).

Dashes are displayed if current leg is valid for offset. Box prompts are displayed if current leg is invalid for offset.

Offset will begin at first valid offset leg after the start waypoint.

Deletion of start waypoint (or no entry) will result in offset beginning at first valid offset leg in the flight plan.

3 END WAYPOINT

The waypoint at which the offset is to end may be entered (up to 6 characters).

Offset will propagate through flight plan until end waypoint is encountered.

Deletion of end waypoint (or no entry) will result in offset propagating until an invalid offset leg is encountered.

Copyright © The Boeing Company. See title page for details.

DO NOT USE FOR FLIGHT

VNAV Modifications

Three primary cruise modes are available – economy (ECON) cruise, long range cruise (LRC), and cruise with a manually selected speed.

Access to the various cruise pages is obtained by pushing the CRZ mode select key.

[Option – With FANS MCDU]
Access to the various cruise pages is obtained by pushing the VNAV function key while in cruise. Access from other performance pages is via the NEXT/PREV PAGE key.

Cruise Page

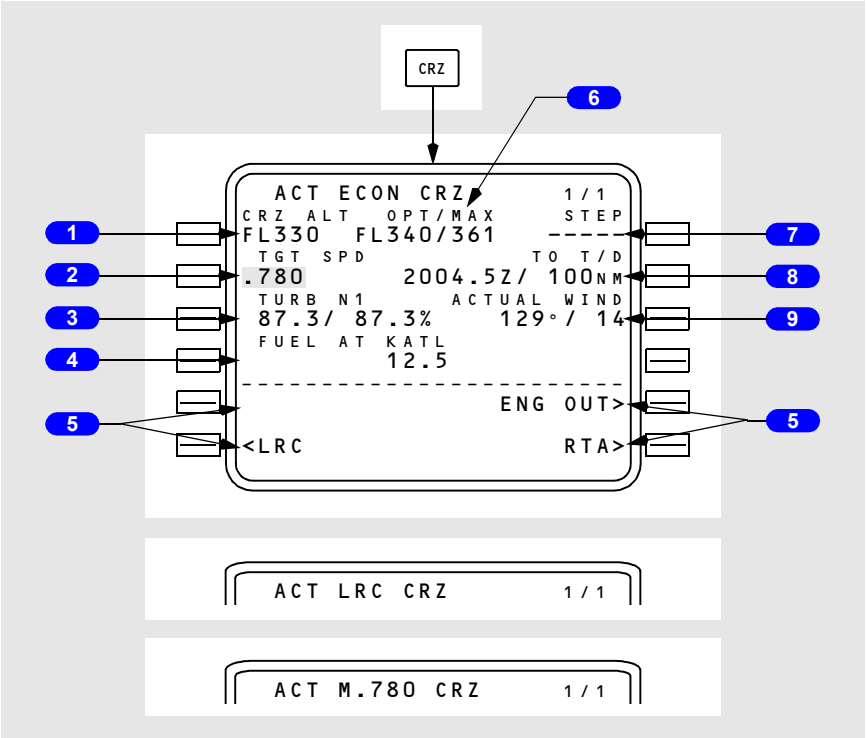

Copyright © The Boeing Company. See title page for details.

[Option – With FANS MCDU]

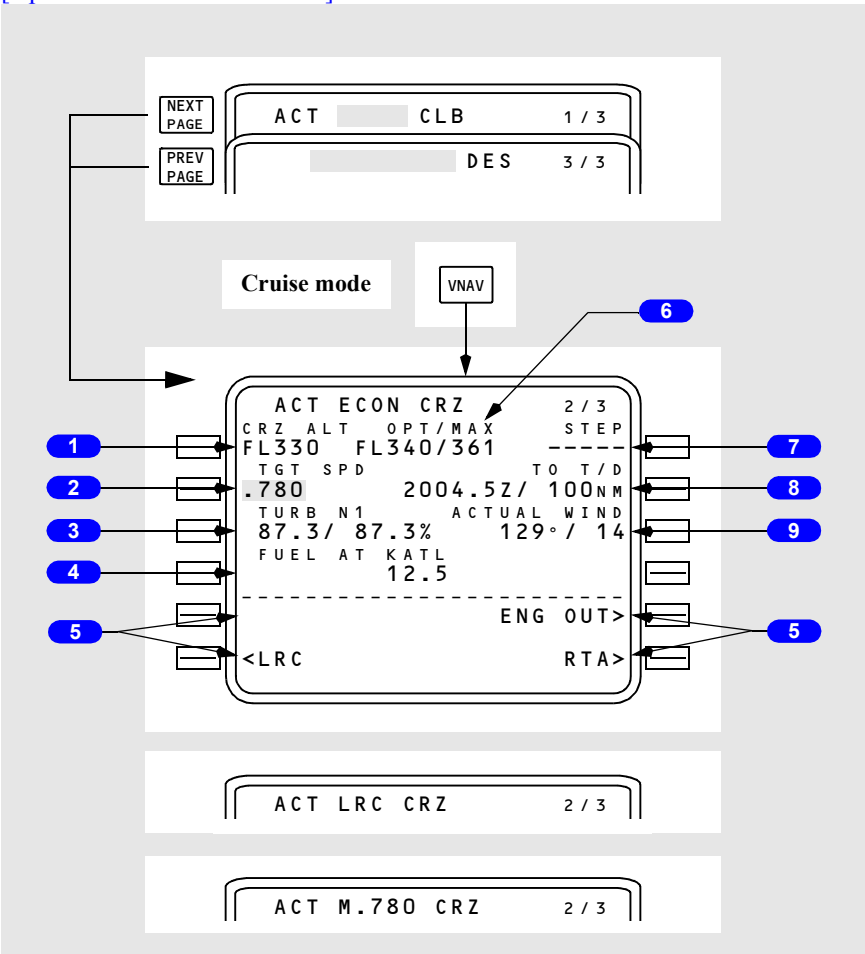

1 Cruise Altitude (CRZ ALT)

Displays present cruise altitude in flight level or feet x 100. Value may be entered via the keyboard or propagated from the PERF INIT, CLB, CRZ CLB, or CRZ DES pages.

During active cruise, entry of a new value propagates to all other pages which display cruise altitude and causes the MOD CRZ CLB or MOD CRZ DES page to appear.

[Option – With speed and altitude intervention]
Value may be increased using altitude intervention.

Copyright © The Boeing Company. See title page for details.

DO NOT USE FOR FLIGHT

2 Target Speed (TGT SPD)

Displays the computed or manually selected value for target airspeed or Mach. Computed speed is limited to a maximum of 335 knots or M.809.

The value is reverse highlighted on an active cruise page.

3 Turbulence N1 (TURB N1)

Displays proper N1 for turbulence penetration.

Value is for reference only. It is not commanded to the autothrottle.

4 Fuel at Destination (FUEL AT XXXX)

Displays the predicted fuel remaining at destination.

The value assumes continued flight per the displayed cruise and planned descent modes along the active route.

If a step to altitude is entered on line 1R, the computation assumes that the step will occur at the step point. After passing the step climb point, the predicted fuel weight is based on an immediate step climb from current position.

5 Cruise Page Prompts

Allow line selection of the various cruise pages.

The RTA prompt is replaced with ERASE when a MOD page is displayed.

6 Optimum/Maximum Altitude (OPT/MAX)

Displays the computed optimum altitude for the displayed cruise mode. The value is not constrained by minimum cruise time criteria (as is the TRIP ALT on the PERF INIT page).

Also displays the maximum possible altitude based on the selected target speed and the specified maneuver margin.

Values are advisory only. They are provided for crew reference.

7 Step to Altitude Line (STEP)

This line may be used to enter a possible step climb or descent altitude for crew evaluation.

The line will be blank when within 100 nm of top of descent or when RTA mode is active.

8 Top of Descent (TO T/D) Line

Displays time of arrival at and distance to top of descent point.

Copyright © The Boeing Company. See title page for details.

The data is always displayed when the distance is less than 100 nm. If the distance is more than 100 nm, the data will be displayed only if a step to altitude has not been entered.

9 ACTUAL WIND

Displays computed or manually entered true wind for present altitude.

A manual entry has priority. The data line title then changes to EST WIND (estimated wind).

The displayed value is used as the assumed true wind at the step to altitude for making wind/altitude trade computations.

RTA Cruise

If an RTA waypoint has been specified, the cruise page will reflect the RTA data.

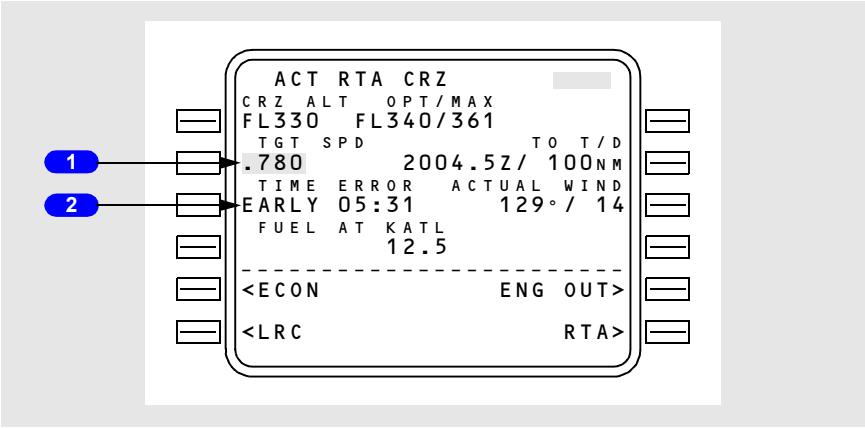

1 Target Speed (TGT SPD)

Displays the computed speed required to meet the RTA.

When RTA mode is exited by waypoint sequence or by deletion, this speed becomes the FMC target speed on a manual speed cruise page and the scratchpad message SELECT MODE AFTER RTA is displayed.

2 TIME ERROR

Displays the computed time error at the RTA waypoint.

Same as time error on RTA PROGRESS page.

Copyright © The Boeing Company. See title page for details.

DO NOT USE FOR FLIGHT

Cruise with Step Climb

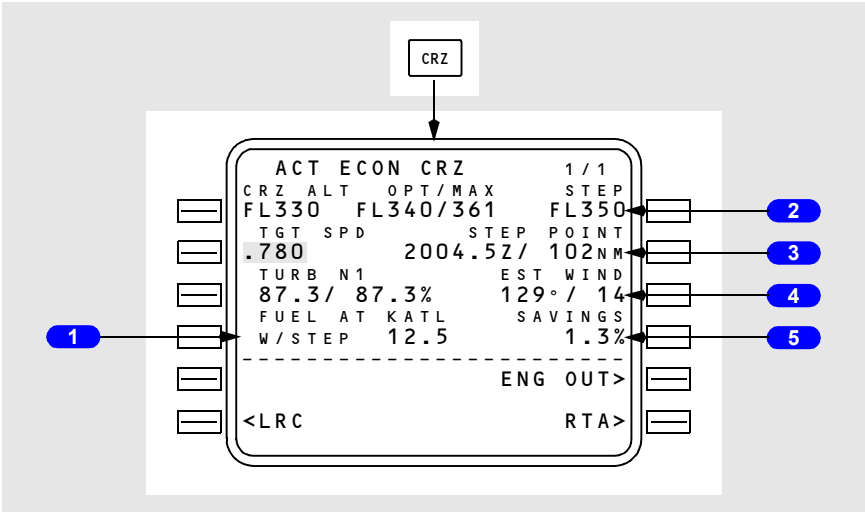

[Option – With FANS MCDU]

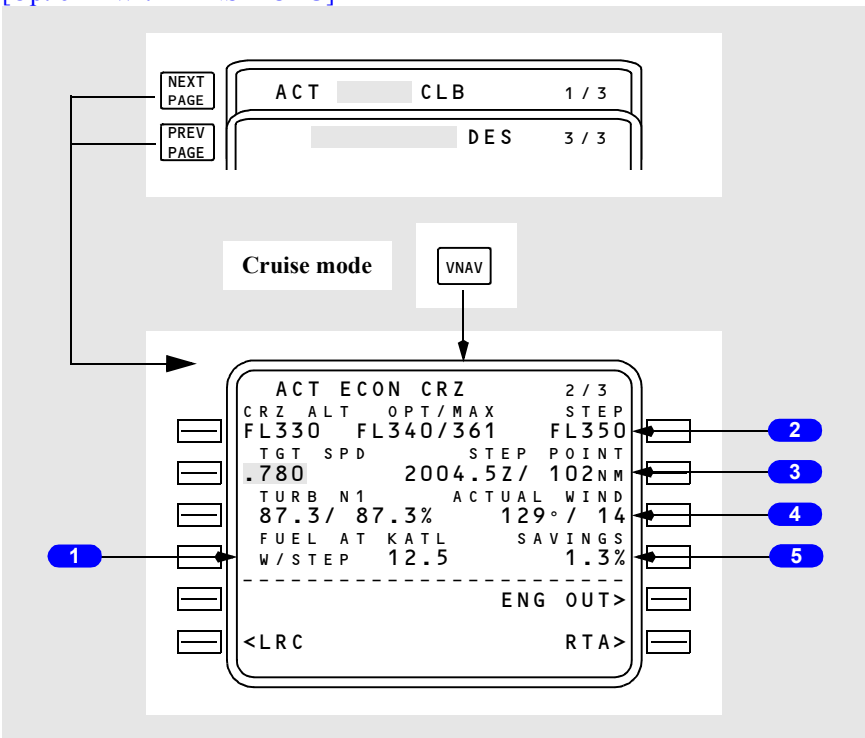

Copyright © The Boeing Company. See title page for details.

1 Fuel at Destination with Step Climb Altitude (FUEL AT XXXX)

The computation assumes the step climb will occur at the STEP point, and the value is prefixed by W/STEP.

2 Step To Altitude (STEP)

Used to enter step climb or step descent altitudes for crew evaluation.

Blank when within 100 nm of top of descent or when RTA mode is active.

3 STEP POINT

Displays the computed ETA at, and distance to, the first possible step climb point based on gross weight.

Blank if no entry on STEP TO line.

4 Wind (ACTUAL WIND or EST WIND)

Used as the assumed true wind at the STEP TO altitude for making wind–altitude trade computations.

5 Savings/Penalty (SAVINGS or PENALTY)

Displays the predicted cost savings or penalty associated with flying the displayed speed/altitude step climb or descent profile, as compared to flying the current cruise speed schedule and maintaining present altitude to top of descent.

Blank if no step data entered.

Copyright © The Boeing Company. See title page for details.

DO NOT USE FOR FLIGHT

Cruise Climb

The cruise climb page displays data for a cruise climb to a new altitude.

MOD CRZ CLB is automatically displayed during cruise if a higher cruise altitude is entered on the CRZ page.

During VNAV operation, execution initiates a climb at climb thrust and cruise target speed to the new altitude.

The VNAV climb mode is active until reaching the selected altitude. The mode then automatically changes back to cruise.

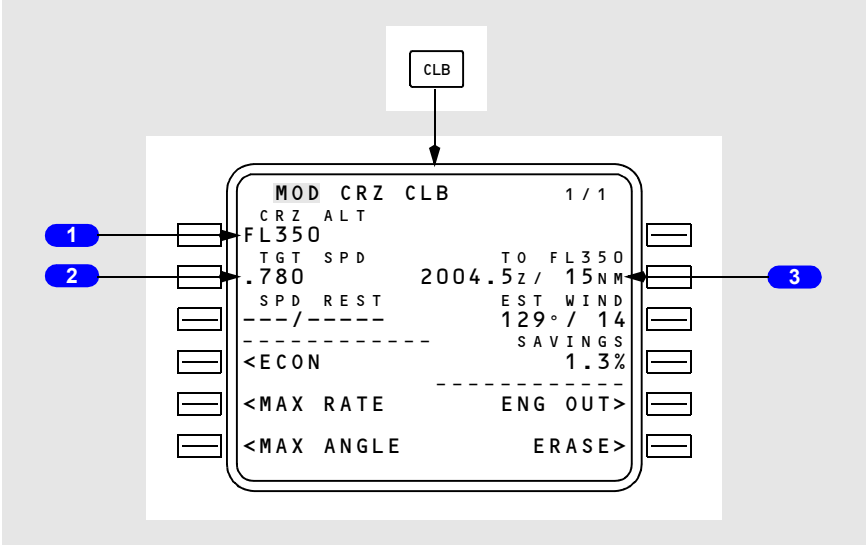

Copyright © The Boeing Company. See title page for details.

[Option – With FANS MCDU]

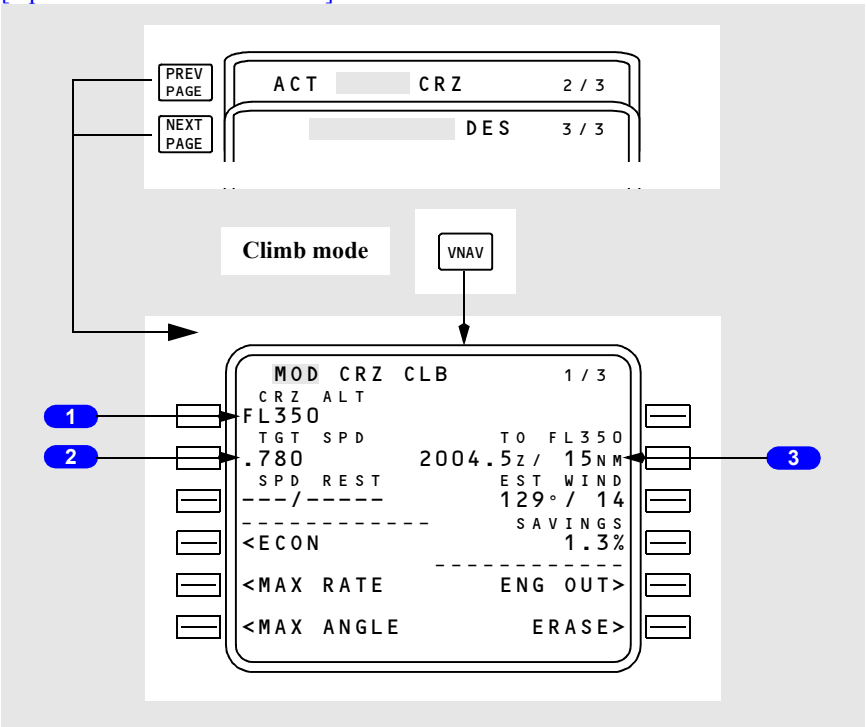

1 Cruise Altitude (CRZ ALT)

Initially displays the CRZ ALT entered on the CRZ page.

Manual entry may be made.

2 Target Speed (TGT SPD)

Displays target cruise speed for the displayed cruise altitude.

Manual entry may be made.

3 TO FLXXX

Displays ETA at, and distance to, the displayed cruise altitude.

Copyright © The Boeing Company. See title page for details.

DO NOT USE FOR FLIGHT

RTA Cruise Climb

The RTA cruise climb page displays the same data as the cruise climb page except for the TIME ERROR line.

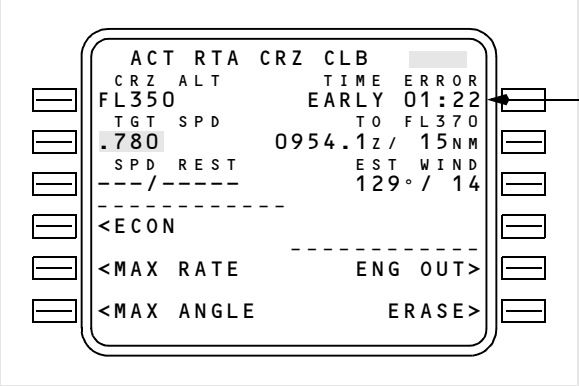

1 TIME ERROR

Displays the computed time error at the RTA waypoint.

Same as time error on RTA PROGRESS page.

Copyright © The Boeing Company. See title page for details.

Cruise Descent

The cruise descent page displays data for a cruise descent to a new altitude.

MOD CRZ DES is automatically displayed during cruise if a lower cruise altitude is entered on the CRZ page.

During VNAV operation, execution initiates a descent at 1,000 feet per minute and cruise target speed to the new altitude.

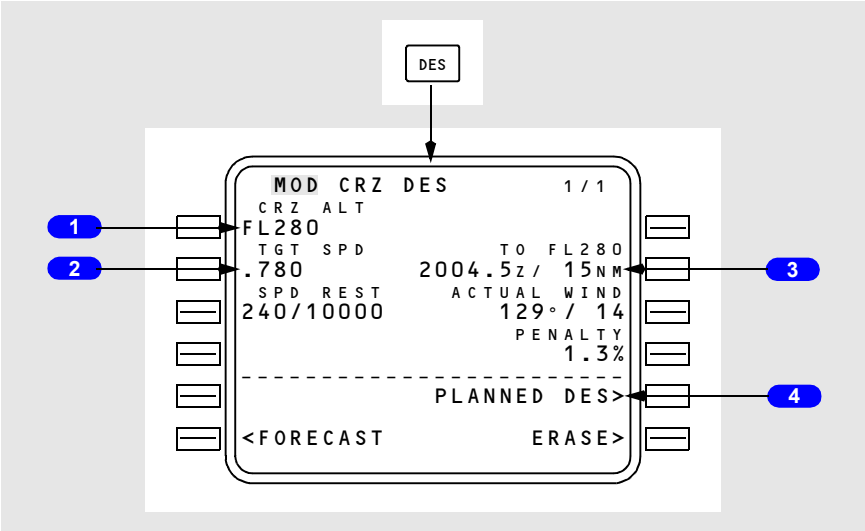

Copyright © The Boeing Company. See title page for details.

DO NOT USE FOR FLIGHT

[Option – With FANS MCDU]

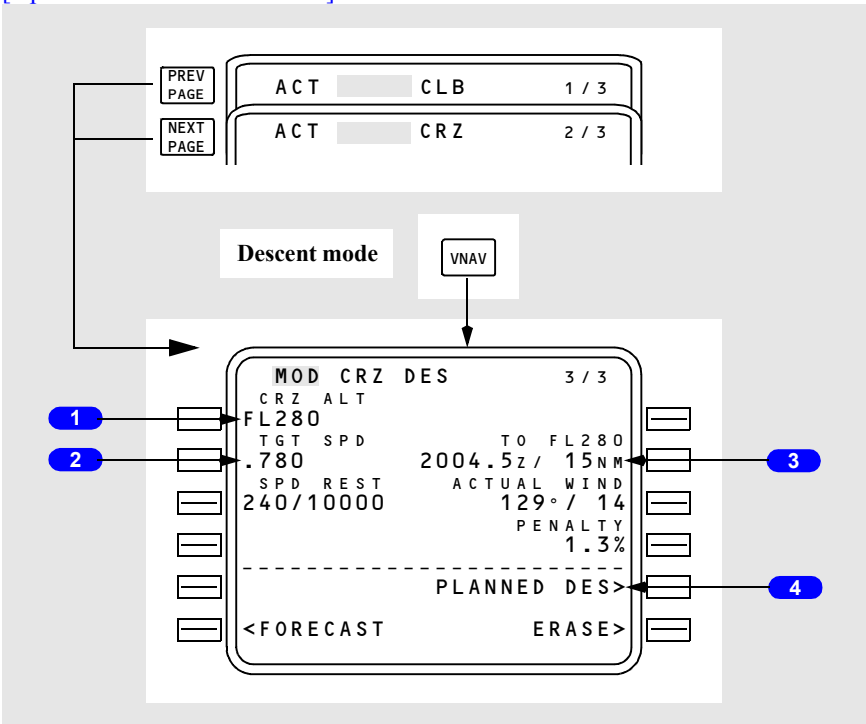

1 Cruise Altitude (CRZ ALT)

Initially displays the CRZ ALT entered on the CRZ page.

Manual entry may be made.

2 Target Speed (TGT SPD)

Displays target cruise speed for the displayed cruise altitude.

Manual entry may be made.

3 TO FLXXX

Displays ETA at, and distance to, the displayed cruise altitude.

4 Planned Descent (PLANNED DES)

Shows the planned DES page and allows access to the planned standard descent mode.

Copyright © The Boeing Company. See title page for details.

RTA Cruise Descent

The RTA cruise descent page displays the same data as the cruise descent page except for the TIME ERROR line.

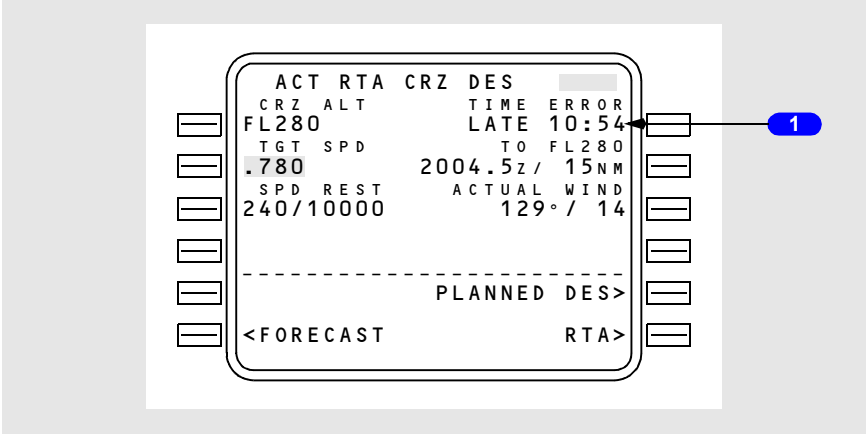

1 TIME ERROR

Displays the computed time error at the RTA waypoint.

Same as time error on RTA PROGRESS page.

Copyright © The Boeing Company. See title page for details.

DO NOT USE FOR FLIGHT

Engine Out Cruise

The engine out cruise page may be accessed by selecting the ENG OUT prompt on the cruise page. The page displays advisory data for a one engine inoperative condition.

[Option – FMC U10.3 and later]

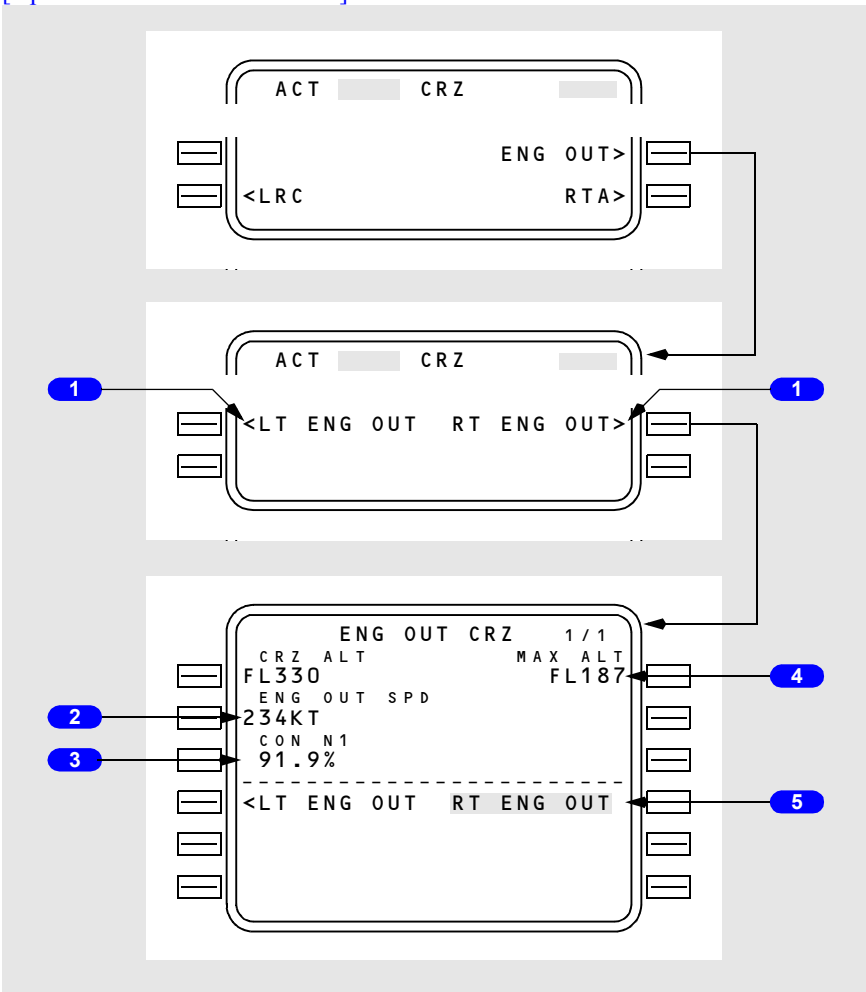

1 Left/Right Engine Out (LT ENG OUT/RT ENG OUT)

[Option – FMC U10.3 and later]
Selection changes display to ENG OUT CRZ page. The ENG OUT CRZ page is information only.

Copyright © The Boeing Company. See title page for details.

2 Engine Out Speed (ENG OUT SPD)
[Option – FMC U10.3 and later]

Displays the optimum speed based on minimum drag.

3 Continuous N1 (CON N1)
[Option – FMC U10.3 and later]

Displays N1 for maximum continuous thrust.

N1 is computed using actual bleed conditions.

4 Maximum Altitude (MAX ALT)

Displays the computed maximum altitude at which a company–specified rate of climb can be achieved, using one engine at maximum continuous thrust (default climb rate is 100 feet per minute).

After page selection, the FMC accounts for wing and engine anti–ice, air conditioning, and the engine bleed of the operating engine.

5 LT ENG OUT/RT ENG OUT

Selected engine is shown in reverse highlighting.

Copyright © The Boeing Company. See title page for details.

DO NOT USE FOR FLIGHT

Early Descent

Early descents are initiated from the DES page. Once an early descent is executed, VNAV transitions to the descent mode and cruise features are no longer available.

For a path descent the DES NOW prompt will not be displayed until a descent path is established. Once executed, the autothrottle adjusts thrust to maintain 1000 feet per minute until intercepting the descent path.

For a speed descent, the autothrottle retards to idle and pitch maintains target speed.

1 Descend Now (DES NOW)

Selecting the PATH DES page before reaching the top of descent displays the normal descent page with the prompt DES NOW on the bottom right of the page. Selecting and executing the DES NOW prompt initiates a VNAV descent of 1000 feet per minute at ECON speed. Upon reaching the planned descent path, VNAV transitions to maintain the planned descent path.

Selecting the SPD DES page and executing the DES NOW prompt initiates a VNAV descent at idle thrust and target speed.

Copyright © The Boeing Company. See title page for details.

Route and Waypoint Data

Route Data (RTE DATA) Page

The RTE DATA page displays ETA for each waypoint on the RTE LEGS page. This page also displays forecast wind data for cruise waypoints.

One page displays data for five waypoints.

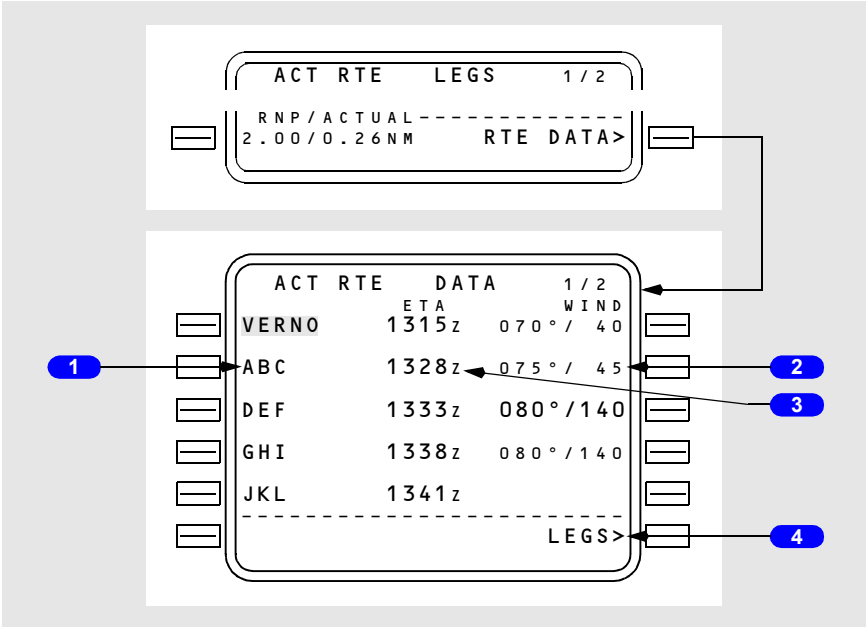

Copyright © The Boeing Company. See title page for details.

DO NOT USE FOR FLIGHT

[Option – With company data link]

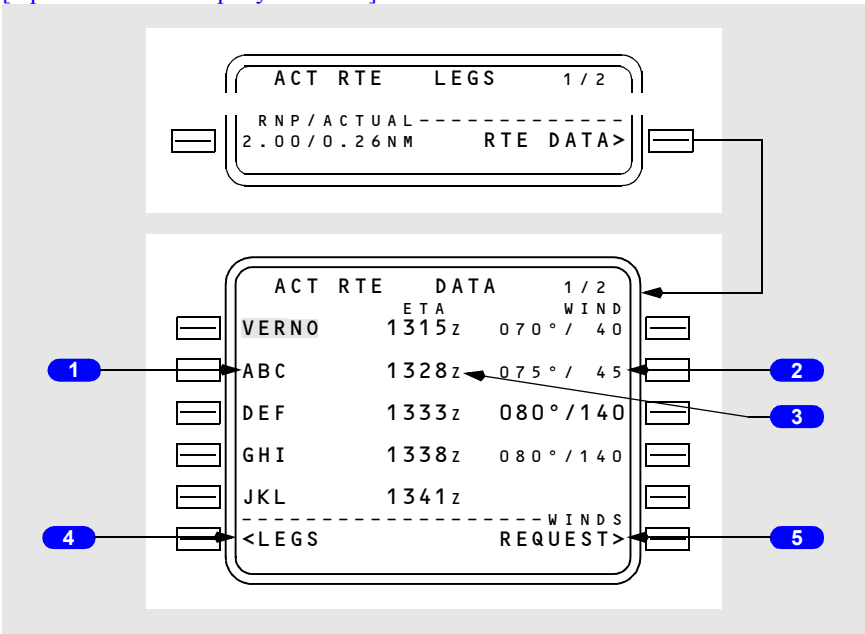

1 Waypoint

Displays the identifier for the waypoint from the ACT RTE LEGS page.

2 WIND

Used for entry and/or display of the true winds at the cruise waypoint identified on the same line.

Entry may be via the keyboard, or propagated from the CRZ WIND entry on the PERF INIT page.

The CRZ WIND value (075°/45 is depicted) propagates to all cruise waypoints (ABC to GHI is the depicted cruise segment).

If no CRZ WIND entry was made, the FMC assumes 000°/000.

A keyboard entry has priority and propagates to all down path cruise waypoints (an entry of 080°/140) at DEF is depicted). The entry must be executed.

Any entries propagated from the CRZ WIND entry are displayed in small font. Keyboard entries are displayed in large font.

Crew entries of forecast winds (or default 000°/000) are automatically biased with the actual wind computed by the FMC when within 100 NM of a cruise waypoint and within 2000 feet of a cruise altitude. Biased values are not displayed.

Copyright © The Boeing Company. See title page for details.

Blank for non–cruise waypoints (VERNO and JKL are depicted). Entry is inhibited.

3 Estimated Time of Arrival (ETA)

Displays the FMC calculated waypoint ETA.

4 LEGS

Selection displays the RTE LEGS page.

5 WINDS REQUEST
[Option – With company data link]

Push – transmits a data link request for winds uplink.

Copyright © The Boeing Company. See title page for details.

DO NOT USE FOR FLIGHT

Position Shift Page 3/3

On the POS SHIFT page, each prompt indicates the bearing and distance of the indicated system relative to the FMC position. FMC position is displayed on line 1R of POS REF page 2/3. The entries with parentheses in the center of the page show the active position references.

Data fields are blank when on the ground.

[Option – Single FMC with GPS]

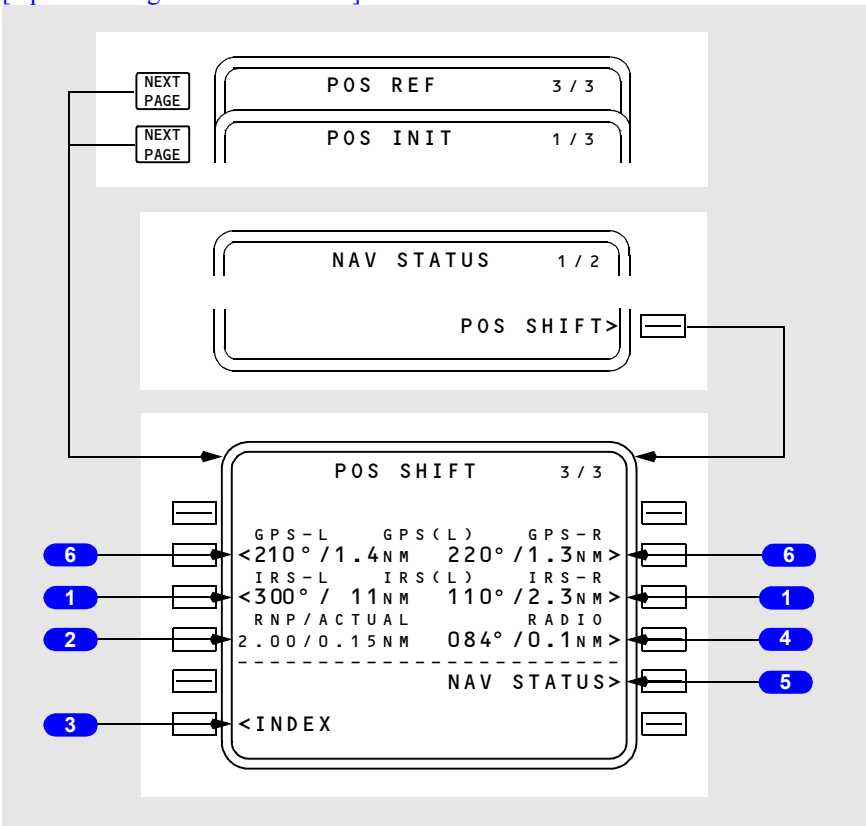

Copyright © The Boeing Company. See title page for details.

[Option – Dual FMC with GPS]

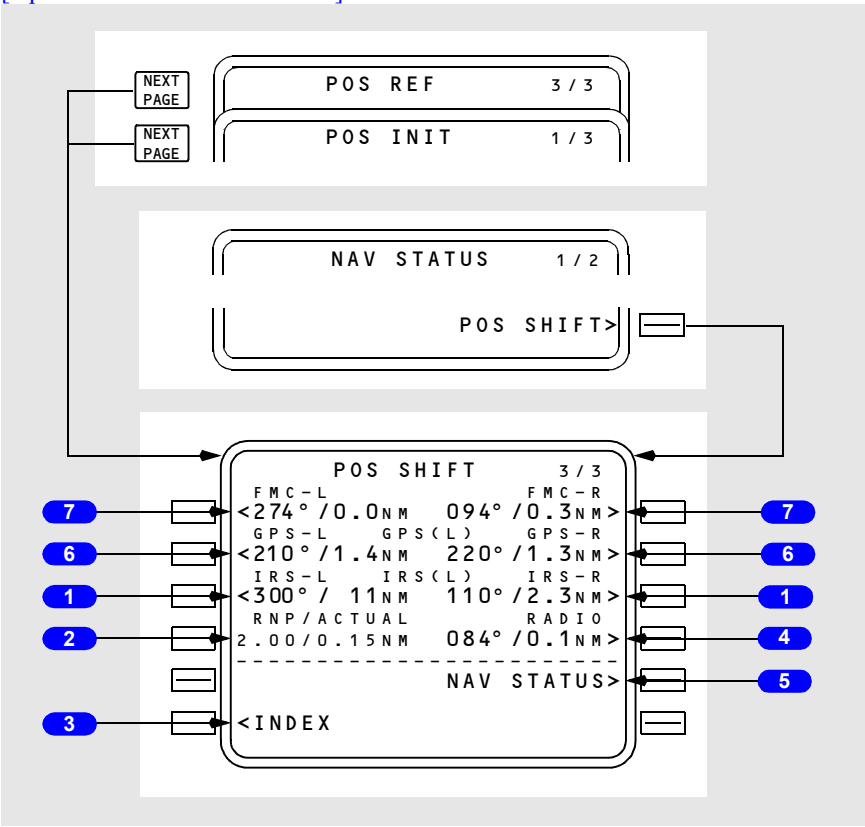

1 IRS Position L/R

Displays left and right IRS position relative to FMC position using current mag/true reference. Blank if IRS position is invalid.

Push – highlights the line, illuminates the EXEC key, and displays the CANCEL prompt.

2 Required Navigation Position/Actual (RNP/ACTUAL)

Displays the required navigation accuracy compared to actual navigation accuracy.

Manual entry is allowed.

3 INDEX

Push – displays the INIT/REF INDEX page.

Copyright © The Boeing Company. See title page for details.

DO NOT USE FOR FLIGHT

4 RADIO Position

Displays radio position relative to FMC position using current mag/true reference. Blank if radio position is invalid.

Push – highlights the line, illuminates the EXEC key, and displays the CANCEL prompt.

5 Navigation Status (NAV STATUS)

Push – displays the NAV STATUS page.

6 GPS Position L/R
[Option – With GPS]

Displays left and right GPS position relative to FMC position using current mag/true reference. Blank if GPS position is invalid.

Push – highlights the line, illuminates the EXEC key, and displays the CANCEL prompt.

7 FMC Position L/R
[Option – With dual FMC]

Displays left and right FMC position relative to FMC position using current mag/true reference. Blank if FMC position is invalid.

Push – highlights the line, illuminates the EXEC key, and displays the CANCEL prompt.

Copyright © The Boeing Company. See title page for details.

Inflight Position Update

FMC position update is accomplished on the POS SHIFT 3/3 page in flight. Selecting a prompt stops the updating of the relative position. The bearing and distance is highlighted, the execute key is illuminated, and the CANCEL prompt is displayed in line 6R.

When the position shift is executed, UPDATE COMPLETE is displayed.

[Option – Single FMC with GPS]

Prompt selected

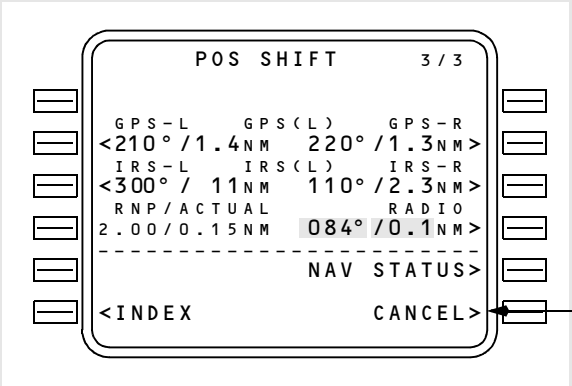

POS SHIFT EXECuted

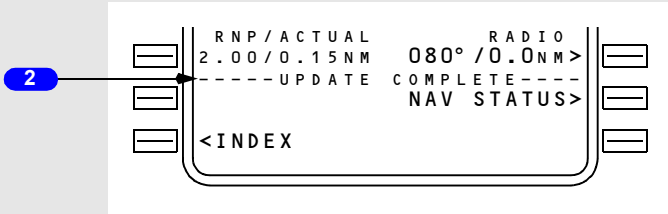

Copyright © The Boeing Company. See title page for details.

DO NOT USE FOR FLIGHT

[Option – Dual FMC with GPS]

Prompt selected

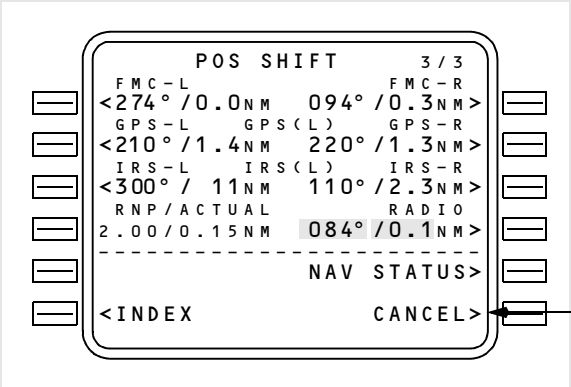

POS SHIFT EXECuted

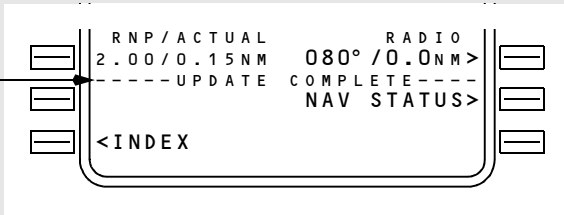

1 CANCEL

Displayed when a line selection is made for position update. Selection prior to execution cancels the line selection.

2 UPDATE COMPLETE

Displayed after a position shift has been selected and executed.

Copyright © The Boeing Company. See title page for details.

Navigation Data

Reference Navigation Data (REF NAV DATA) Page

The reference navigation data page provides information about waypoints, navaids, airports, and runways. Entering the appropriate identifier initiates the display. Writing SUPP in the scratch pad prior to selecting NAV DATA results in display of the supplemental navigation data (SUPP NAV DATA) page.

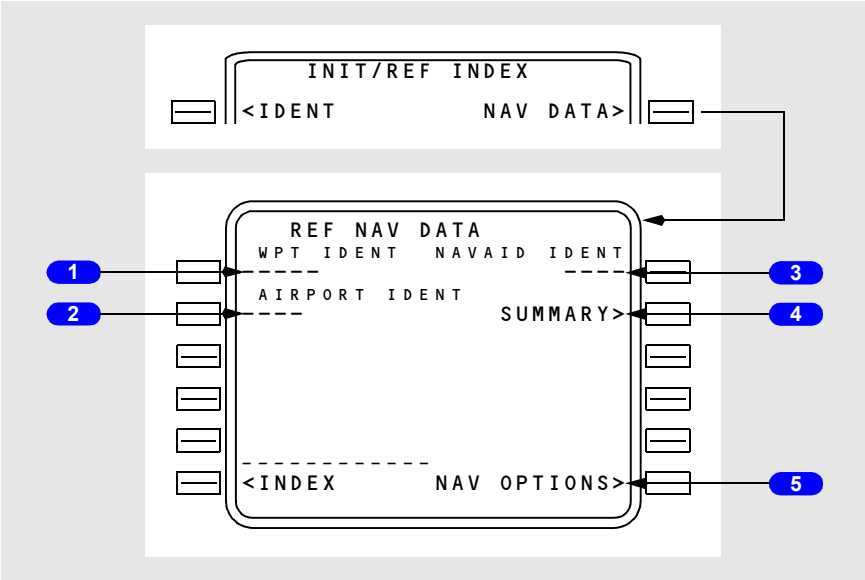

1 Waypoint Identifier (WPT IDENT)

Displays dashes initially.

Any waypoint, navaid or runway can be entered.

Format for runway entry is “RWnna” where “nn” is a one or two digit numeric (with or without leading zeros) and “a” is an optional character L, R, or C.

In order to access runway data, an airport must be identified.

2 Airport Identifier (AIRPORT IDENT)

Displays dashes initially.

Displays box prompts if runway is entered into 1L prior to airport entry.

An invalid airport/runway pair will result in “NOT IN DATA BASE” displayed in the scratchpad.

Copyright © The Boeing Company. See title page for details.

DO NOT USE FOR FLIGHT

3 Navigation Aid Identifier (NAVAID IDENT)

Displays dashes initially.

Valid entries are up to 4 alphanumeric characters.

If the navaid is not contained in the databases, box prompts will appear in related data fields needing entry.

4 SUMMARY

Selection displays NAV SUMMARY pages.

Blank if supplimental and temporary databases are empty.

5 Navigation Options (NAV OPTIONS)

Selection displays NAV OPTIONS page.

If the entered identifier is already stored in the permanent, supplemental, or temporary database, then relevant data propagates to the subsequent REF NAV DATA display.

If the entered identifier is not stored in any database, the subsequent REF NAV DATA display contains box prompts. Following entry of the required information, the new data may be stored in the temporary database by executing (except for runway data). Data may be subsequently deleted from the temporary database by deleting the individual identifier, if the identifier is not presently being displayed on another page (e.g., RTE LEGS, PROGRESS, etc.).

All data stored in the temporary database is cleared at flight completion.

Copyright © The Boeing Company. See title page for details.

Waypoint Data Display

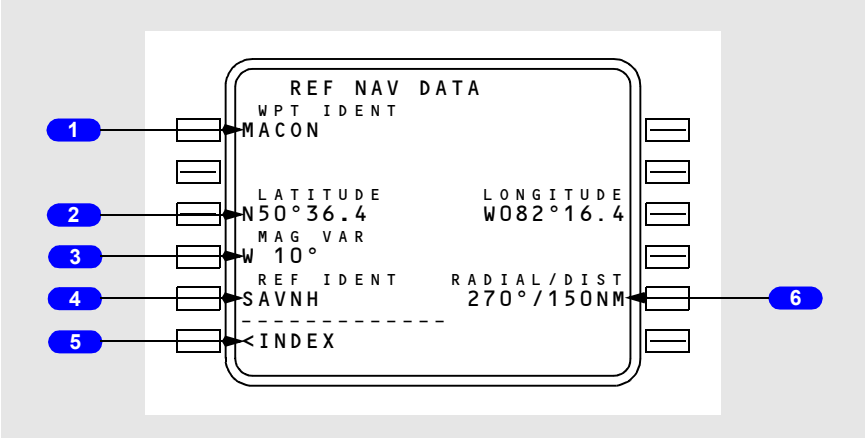

1 Waypoint Identifier (WPT IDENT)

Displays or permits entry of the desired waypoint. When this entry is complete, the associated data lines are displayed.

2 LATITUDE/LONGITUDE

Displays or permits entry of waypoint latitude and longitude. Entry on the REF IDENT and RADIAL/DIST lines cause latitude and longitude to be computed and displayed.

3 Magnetic Variation (MAG VAR)

Displays or permits entry of waypoint magnetic variation. Data is automatically computed based on latitude and longitude.

Manual entry has priority.

4 Reference Identifier (REF IDENT)

Together with RADIAL/DIST, displays or permits entry of reference point for a created waypoint.

5 INDEX

Selection displays REF NAV DATA page.

6 Radial/Distance (RADIAL/DIST)

Together with REF IDENT, displays or permits entry of bearing and distance for a created waypoint.

Copyright © The Boeing Company. See title page for details.

DO NOT USE FOR FLIGHT

Navigation Aid Data Display

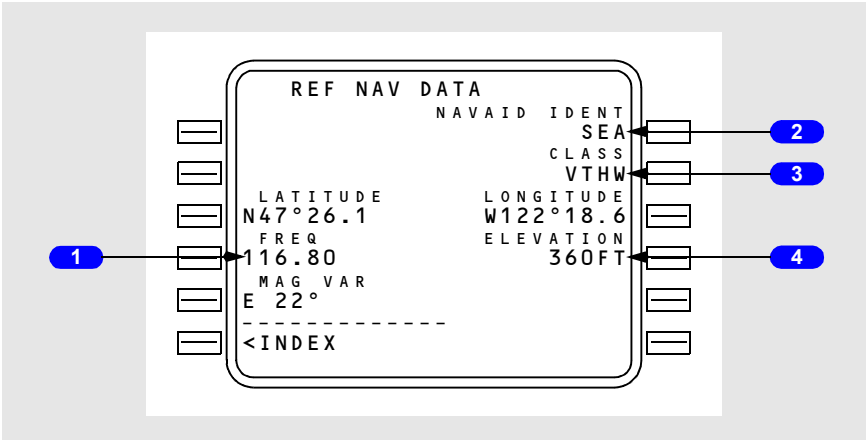

1 Frequency (FREQ)

Displays or permits entry of the frequency of the entered navaid.

2 Navigation Aid Identifier (NAVAID IDENT)

Displays or permits entry of navaid identifier (5 characters maximum). Following entry, the associated data lines are displayed.

3 Classification (CLASS)

Displays or permits entry of the classification of the entered navaid.

4 ELEVATION

Displays or permits entry of the elevation (feet above MSL) of the entered navaid.

Copyright © The Boeing Company. See title page for details.

Airport Data Display

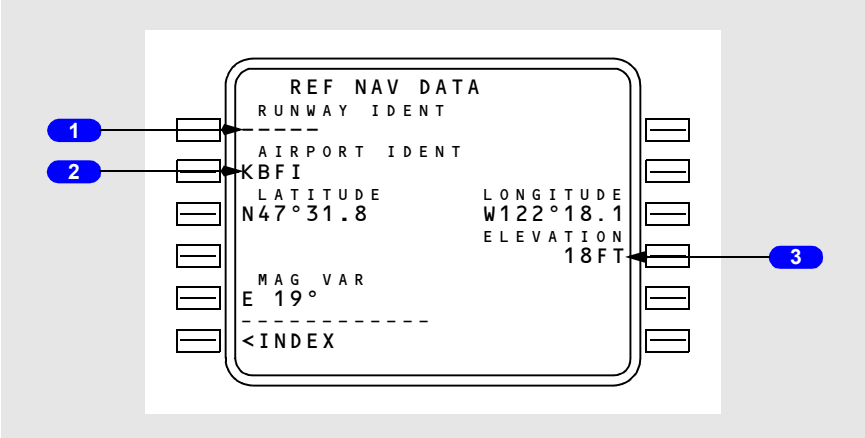

1 Runway Identifier (RUNWAY IDENT)

Permits entry of runway identifier.

2 Airport Identifier (AIRPORT IDENT)

Displays airport identifier.

3 ELEVATION

Displays or permits entry of the elevation (feet above MSL) of the entered airport.

Copyright © The Boeing Company. See title page for details.

DO NOT USE FOR FLIGHT

Runway Data Display

A runway identifier may be entered on the airport data display page or as a waypoint on the REF NAV DATA page. On the airport data display page, entry may be in the form of 13R or RW13R. Single digit entries are possible, with or without leading zeros.If the waypoint method is used, entry must be in the form RW13R, and the proper airport identifier must be entered on the runway data display page. Runways must be stored in the permanent navigation database.

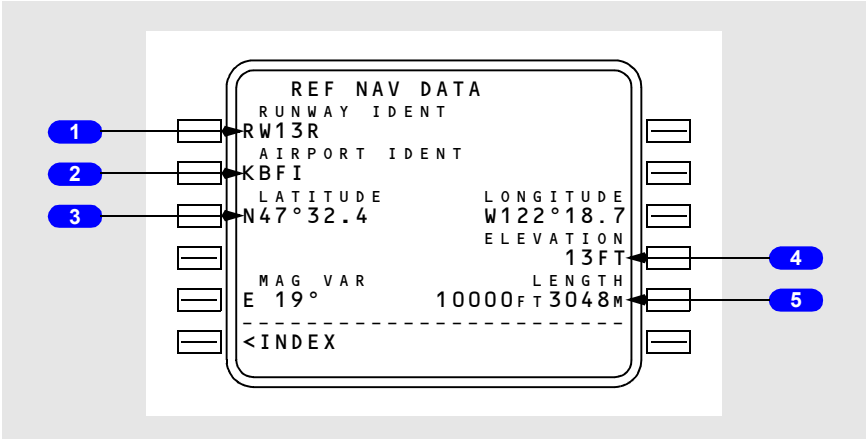

1 Runway Identifier (RUNWAY IDENT)

Displays runway identifier.

2 Airport Identifier (AIRPORT IDENT)

Displays airport identifier.

3 LATITUDE/LONGITUDE

Displays latitude and longitude of entered runway.

4 ELEVATION

Displays elevation (feet above MSL) of the entered runway.

5 Runway Length (LENGTH)

Displays length of entered runway in feet and meters.

Copyright © The Boeing Company. See title page for details.

Navigation Summary (NAV SUMMARY)

The NAV SUMMARY pages show the contents of the temporary and supplemental navigation databases. Contents of the temporary navigation database show first, followed by contents of the supplemental navigation database.

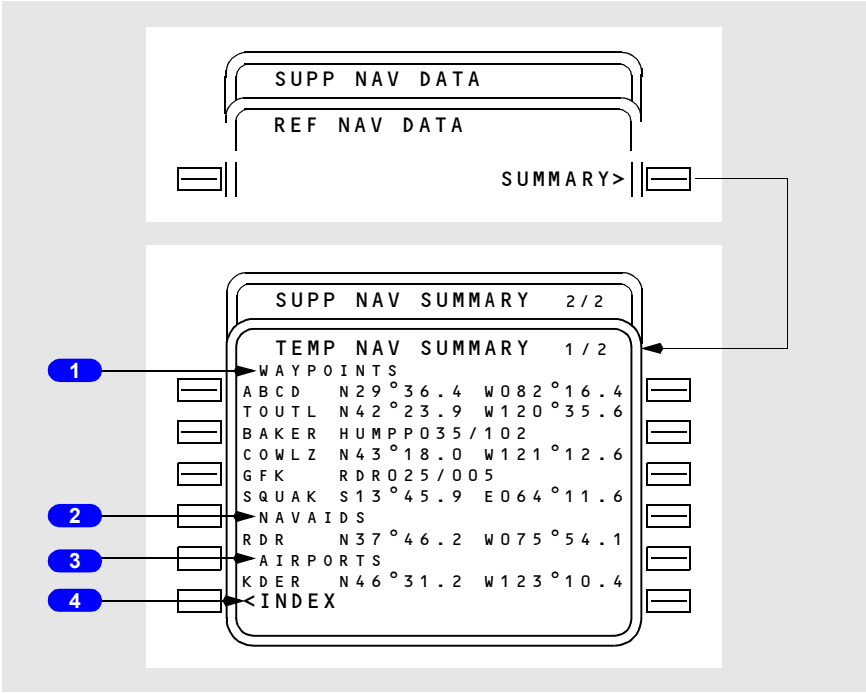

1 WAYPOINTS

Shows waypoints stored in related database.

Waypoints show in defining format.

2 NAVAIDS

Shows navaids stored in related database.

3 AIRPORTS

Shows airports stored in related database.

4 INDEX

Push – Shows page (REF NAV DATA or SUPP NAV DATA) used to access NAV SUMMARY pages.

Copyright © The Boeing Company. See title page for details.

DO NOT USE FOR FLIGHT

Supplemental Nav Data

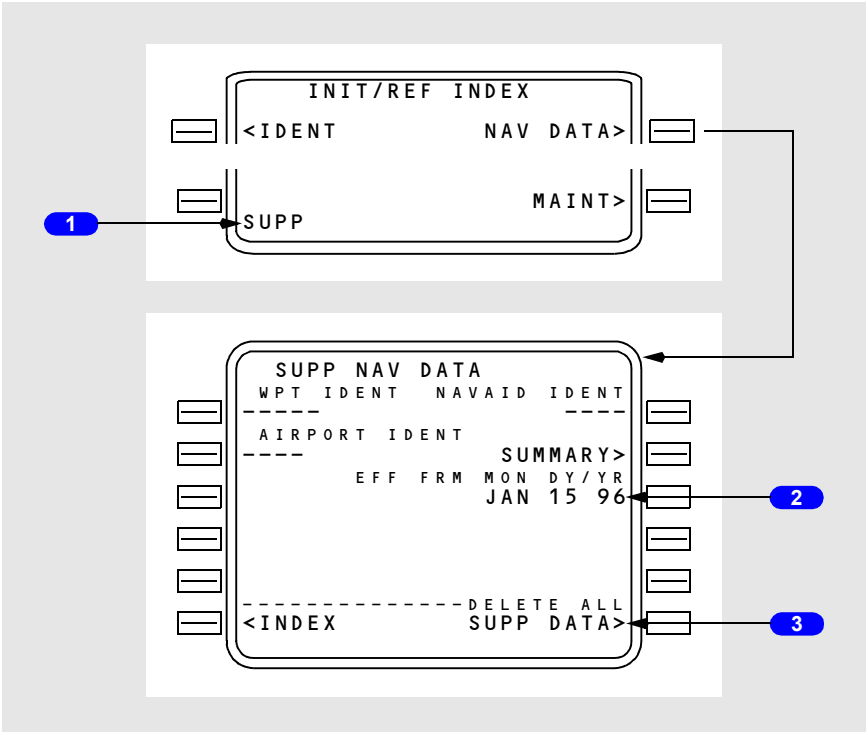

Copyright © The Boeing Company. See title page for details.

[Option – With company data link]

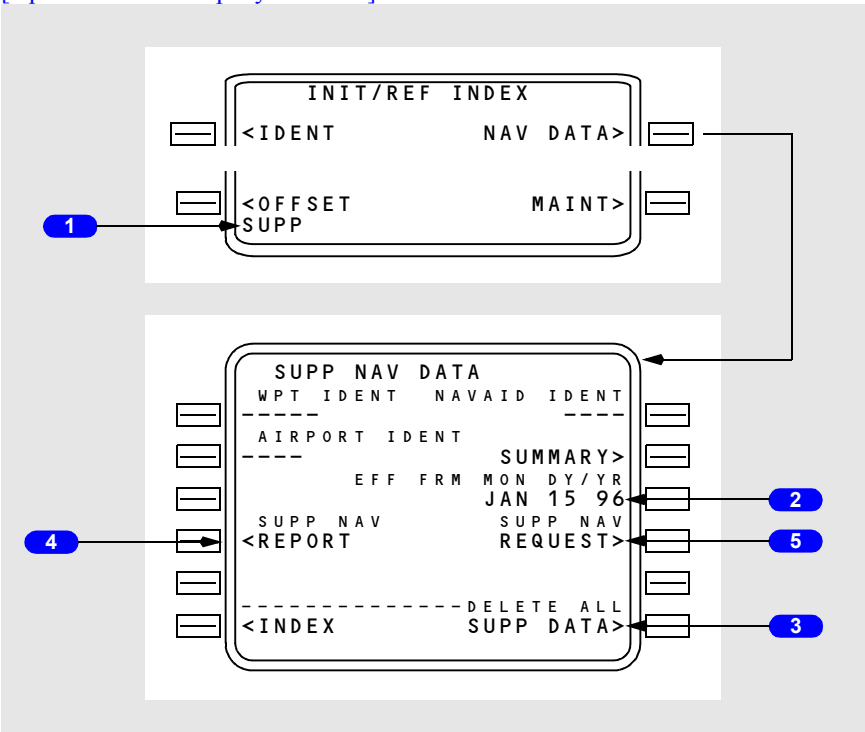

1 SUPP Scratchpad Entry

The supplemental navigation database is accessed by typing SUPP in the scratchpad while on the INIT/REF INDEX page, then selecting the NAV DATA prompt. Access is only available on the ground.

2 Effectivity Date (EFF FRM MON DY/YR)

Allows entry of month, day, and year that the supplemental database becomes valid. The date will be displayed on IDENT page 1/2 after entry. Box prompts are displayed if an effectivity date is not entered.

3 Delete All Supplemental Data (DELETE ALL SUPP DATA)

Data may be deleted from the supplemental database by two methods. Deletion may be accomplished one item at a time on the display pages, or the entire database may be deleted by selecting this prompt. The prompt is only available before entry of an origin airport.

Copyright © The Boeing Company. See title page for details.

DO NOT USE FOR FLIGHT

4 SUPP NAV REPORT
[Option – With company data link]

Push – transmits a copy of supplemental navigation database.

5 SUPP NAV REQUEST
[Option – With company data link]

Push – transmits a data link request for a supplemental navigation database uplink.

Copyright © The Boeing Company. See title page for details.

Navigation Status Display

The NAV STATUS page displays the current status of the navaids being tuned.

Access to the NAV STATUS display is from the NAV STATUS prompt on the POS SHIFT page 3/3, the PROGRESS page 1/3, and (in flight) the INIT/REF INDEX page or from the NAV OPTIONS page 2/2, NEXT or PREV PAGE.

[Option – Single FMC with GPS]

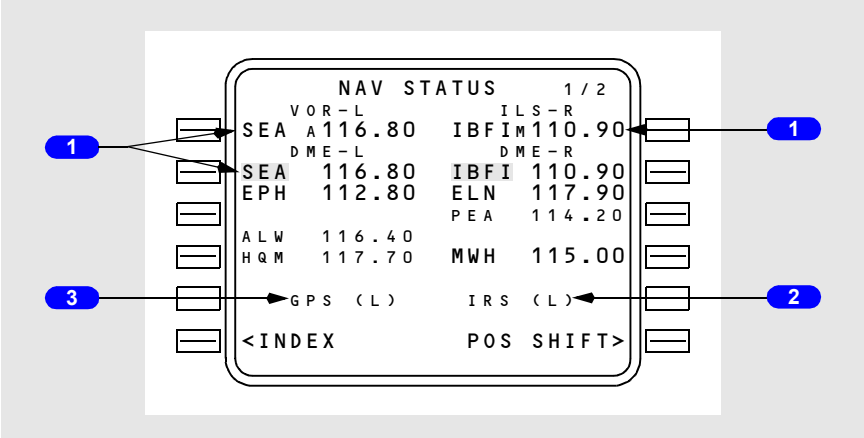

[Option – Dual FMC with GPS]

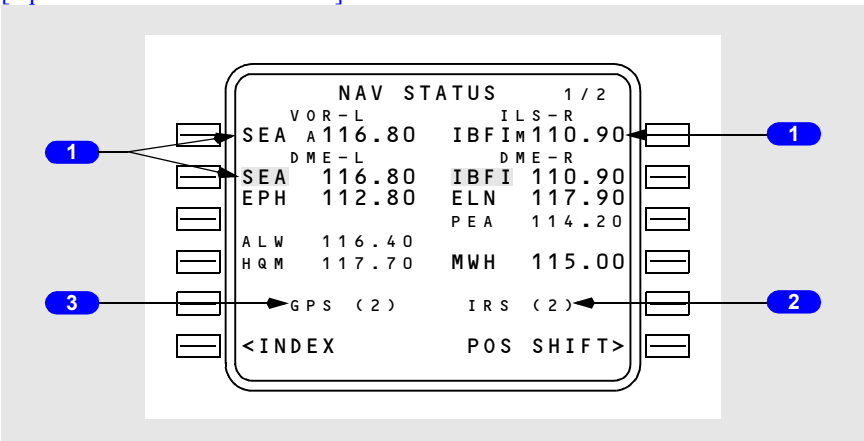

1 VOR/ILS and DME Lines

Lines 1L and 1R display VOR or ILS identifier and frequency tuned on the corresponding VHF NAV control panel.

Lines 2L – 2R through 4L – 4R display up to five DME identifiers and frequencies tuned by the corresponding scanning DME receiver.

Copyright © The Boeing Company. See title page for details.

DO NOT USE FOR FLIGHT

Data is displayed in large font with the identifier highlighted if that facility is being used for navigation.

Data is displayed in large font with the identifier not highlighted if that facility is being received but not used for navigation.

Data is displayed in small font if that facility is being tuned but not received.

If the navaid has failed, FAIL will be displayed in small font.

If there is no corresponding identifier for the displayed frequency, then the identifier field will be blank and only the frequency will be displayed.

On lines 1L or 1R, for VOR/ILS displays, the mode of tuning will be shown:

- M – Manual
- P – Procedural
- A – Automatic.

On lines 2L – 2R through 4L – 4R, if no DME information is received then the identifier and frequency field is blank.

2 IRS Status Display
[Option – Single FMC]

Displays the IRS currently selected for use in navigation. “L” or “R” indicates left or right IRS is being used in the FMC position calculation.

2 IRS Status Display
[Option – Dual FMC]

Displays the IRS currently selected for use in navigation. “L” or “R” indicates left or right, and “2” indicates dual system with both IRSs used in the FMC position calculation.

3 GPS Status Display
[Option – Single FMC with GPS]

Displays the GPS currently selected for use in navigation, “L” or “R” indicates left or right GPS is being used in the FMC position calculation. The display will be blank if GPS is inhibited for use in navigation.

3 GPS Status Display
[Option – Dual FMC with GPS]

Displays the GPS currently selected for use in navigation, “L” or “R” indicates left or right, and “2” indicates dual system with both GPSs used in the FMC position calculation. The display will be blank if GPS is inhibited for use in navigation.

Copyright © The Boeing Company. See title page for details.

Navigation Options (NAV OPTIONS)

The FMC normally rejects the use of navaids that are not suitable for navigation. However, when the aircrew is aware that unreliable navaids exist (either by NOTAM, ATC, etc.) they should manually exclude these navaids from the FMCs navigation solution. This will prevent the possibility of incorrect position calculations and maximize the FMCs reliability. This is accomplished through the NAV OPTIONS page.

Access to the NAV OPTIONS page may be gained by selecting the NAV OPTIONS prompt on the REF NAV DATA page or by selecting NEXT or PREV PAGE on the NAV STATUS page.

[Option – With GPS]

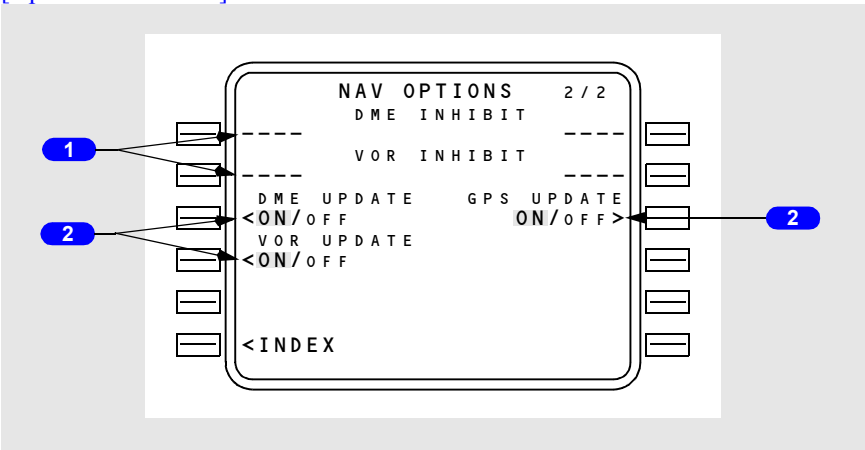

1 DME/VOR INHIBIT

Enter the identifier of up to two VOR/DME, VORTAC, or DME stations that must not be used for FMC position updates.

Entries are blanked at flight completion.

Deleting or overwriting removes a previous inhibit.

The FMC normally uses DME from two different ground stations to update its position solution. When two DME stations are not available, the FMC reverts to single station radial-DME updating to determine position. Only two of the four inhibit entries are utilized at any one time depending upon which update mode the FMC is operating in. The DME INHIBIT entries are excluded from the FMCs update solution whenever the FMC is updating from two DME stations. The VOR INHIBIT entries are excluded from the FMCs update solution whenever the FMC is radial-DME updating.

Copyright © The Boeing Company. See title page for details.

DO NOT USE FOR FLIGHT

2 DME/VOR/GPS UPDATE
[Option – With GPS]

Selection permits switching between ON and OFF modes for updating FMC position. Default mode is ON. The current mode is highlighted.

Selection is reset to ON at flight completion.

Fix Information Page

Two identical FIX INFO pages are used to identify waypoint fixes for display on the navigation display map mode. If desired, fix information can be copied into the route. Page access is via the FIX key.

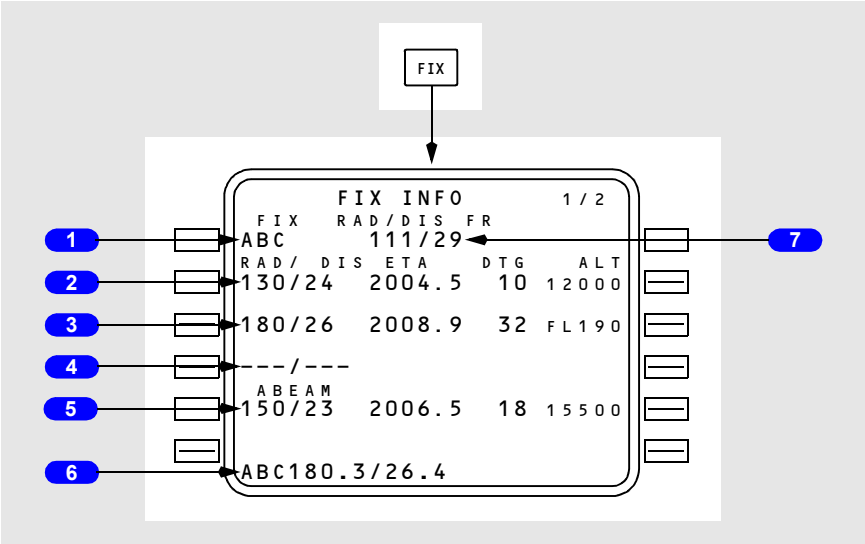

1 FIX Name

Enter the desired fix.

Valid entries are airports, navaids, and waypoints from the navigation database.

Valid entries are airports, navaids, waypoints or runway identifiers from the navigation database.

The selected fix is displayed on the navigation display map mode and highlighted by a green circle.

2 Distance Entry

Enter a distance from the fix. Distances from the fix are displayed on the navigation display map mode as a dashed green circle around the fix.

Copyright © The Boeing Company. See title page for details.

When the distance intersects the active route, the ETA, DTG, and predicted altitude at the intersection are displayed for that intersection.

If there is more than one intersection, the data will apply to the first occurrence and will sequence as each intersection is passed.

Valid entries are xxx.x:

- leading zeros can be omitted for distance
- decimal values can be omitted
- distance only entries must start with a /.

ETA – displays the estimated time of arrival to the intersection point.

DTG – displays the distance to go to the intersection point.

ALT – displays the predicted altitude at the intersection point.

3 Radial Entry

Enter a radial from the fix. Radials are displayed on the navigation display map mode as green dashed lines from the fix.

When the radial intersects the active route, the ETA, DTG, and predicted altitude at the intersection are displayed.

If there is more than one intersection, the data will apply to the first occurrence and will sequence as each intersection is passed.

Valid entries are xxx.

4 Radial/Distance Entry

Enter a radial, distance, or both radial and distance from the fix. A radial and distance from the fix is displayed on the navigation display map mode by both radial and distance, but ETA and ALT fields will be blank.

5 ABEAM

Displays the abeam point and calculates the ETA, DTG, and ALT information.

The fix abeam point ahead of the airplane is displayed by a radial line from the waypoint ending at the nearest perpendicular route leg intersection.

If there is more than one intersection, the data will apply to the first occurrence and will sequence as each intersection is passed.

6 Route Intersection Point Copied

Pushing the line select key for one of the RAD/DIS entries copies the fix place/bearing/distance definition into the scratchpad. This fix can be placed into the route on a LEGS page as a waypoint.

Copyright © The Boeing Company. See title page for details.

DO NOT USE FOR FLIGHT

7 Radial/Distance From Fix (RAD/DIS FR)

Displays the radial and distance from the fix to the airplane. This information is continually updated as the airplane position changes.

Copyright © The Boeing Company. See title page for details.

Introduction

The descent phase begins at the top of descent point and continues to the end of descent point. Planning for the descent phase begins during cruise.

The approach phase begins at the end of descent point and continues to touchdown or go–around. When a go–around is accomplished, the FMC enters the cruise phase.

The only automatic page change provided in the descent/approach modes is the transition from cruise to descent at the top of descent.

Early Descent

Early descent may be commenced prior to reaching the top of descent by using the DES NOW prompt.

Descent

During descent, LNAV progress is managed using the RTE LEGS and PROGRESS pages, as in the cruise phase. VNAV descent management is accomplished primarily on the DES page.

The DES FORECASTS page is also available to enter forecast wind data to aid in descent planning.

[Option – With alternate destination prediction]
Other pages which support descent are:

- DES FORECASTS page – to enter forecast wind data to aid descent planning
- ALTERNATE DESTS page – to manage the selection of alternate airports and diversions.

Descent Page (During Cruise)

The descent page is used to monitor, revise, or select the descent path. Descent modes are economy (ECON) path or speed and manual path or speed. The default VNAV descent mode is ECON PATH. The crew must select a manual speed descent mode.

The page title reflects the VNAV descent mode. The path mode controls descent to fly a vertical path which complies with altitude and speed restrictions in the flight plan. The speed mode controls descent at a fixed speed and complies with altitude and speed restrictions in the flight plan.

Copyright © The Boeing Company. See title page for details.

DO NOT USE FOR FLIGHT

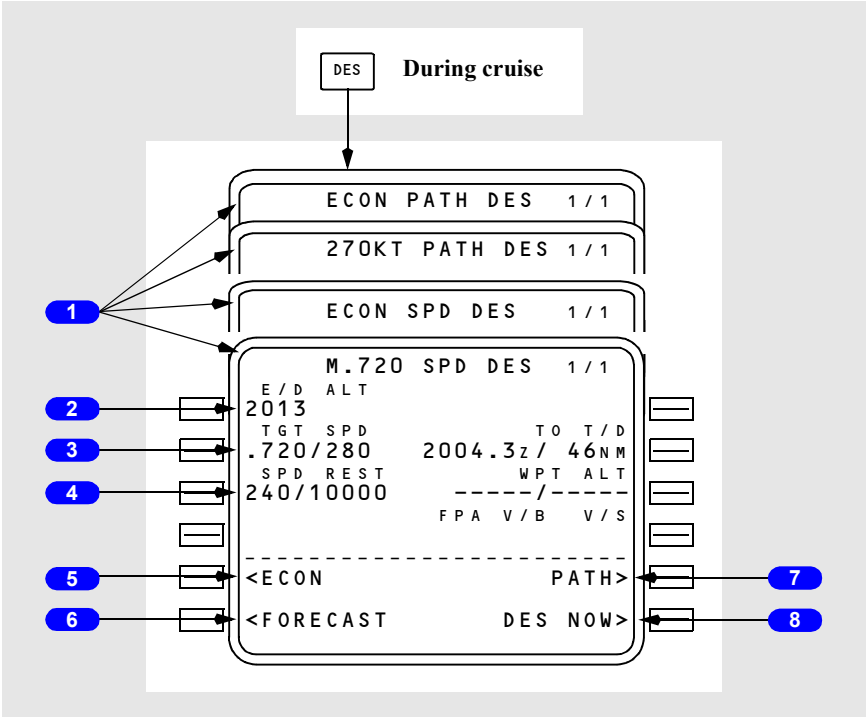

Copyright © The Boeing Company. See title page for details.

[Option – With FANS MCDU]

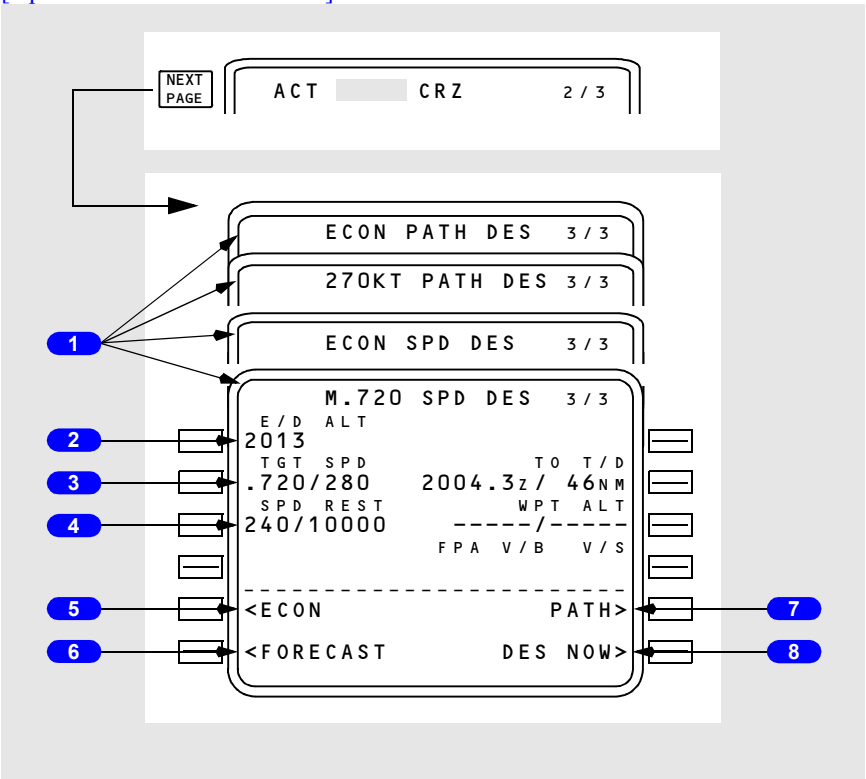

1 Page Title

The page title identifies the selected mode. When a manual speed is selected, the title includes XXXKT for fixed CAS or M.XXX for fixed Mach selections.

Displays ACT when the descent phase is active.

2 End of Descent Altitude (E/D ALT)

Displays the end of descent altitude.

- for a PATH DES page, displays the altitude restriction for the E/D waypoint; blank if path descent not available
- for a SPD DES page, displays the altitude restriction for the E/D waypoint, if an E/D waypoint is present
- if an approach is selected which ends at RWXXX, the E/D altitude will be Threshold Crossing Height (TCH), 50 feet above the runway.

Copyright © The Boeing Company. See title page for details.

DO NOT USE FOR FLIGHT

The end of descent altitude is the last of the following not preceded by a lateral discontinuity:

- lowest altitude constraint, including:

[Option – FMC U10.3 and later]

- threshold crossing height for the runway.

3 Target Speed (TGT SPD)

Displays the command speed used above all waypoint constraints, or speed restrictions.

On ECON PATH or ECON SPD DES pages, displays the computed values for target Mach and airspeed. Speeds are performance limited.

Manual entries may be made and cause the manual PATH or manual SPD DES page for that value to display (M.720 SPD DES is depicted).

Blank for any PATH DES page if a path descent is not available.

4 Speed Restriction (SPD REST)

Displays the most restrictive of the following speeds:

- destination airport speed minus 10 knots
- waypoint speed restriction if greater than minimum flaps up maneuvering speed
- minimum flaps up maneuvering speed
- selected Vref + wind correction for landing flap setting
- whenever flaps are extended, the, appropriate flap speed shall be displayed as XXX/FLAPS. This shall supersede any other speed restriction
- displays XXX/HOLD when decelerating to hold speed prior to hold entry fix.

Dash prompts displayed when there is no active speed restriction.

Manual crew entries or deletions may be made. HOLD or FLAPS speed may not be deleted or modified.

5 Economy (ECON)

Displayed on the manual DES pages.

Push – selects the corresponding ECON SPD or ECON PATH DES page.

6 Descent Forecasts (FORECAST)

Push – selects the DES FORECASTS page.

Copyright © The Boeing Company. See title page for details.

7 PATH

Displayed on the SPD DES pages if a path descent is available.

Push – selects the corresponding PATH DES page.

8 Descend Now (DES NOW)

Displayed on the standard DES pages whenever descent is not ACT or MOD.

Blank for any PATH DES page if a path descent is not available.

Push – arms the DES NOW function and illuminates the EXEC light.

On a PATH DES page, execution allows early initiation of PATH descent at 1000 fpm until intercepting the computed path. On a SPD DES page, execution allows early initiation of a SPD descent at the specified speed (ECON or manual).

Copyright © The Boeing Company. See title page for details.

DO NOT USE FOR FLIGHT

Descent Page (During Descent)

Display when any descent mode is active after beginning of descent.

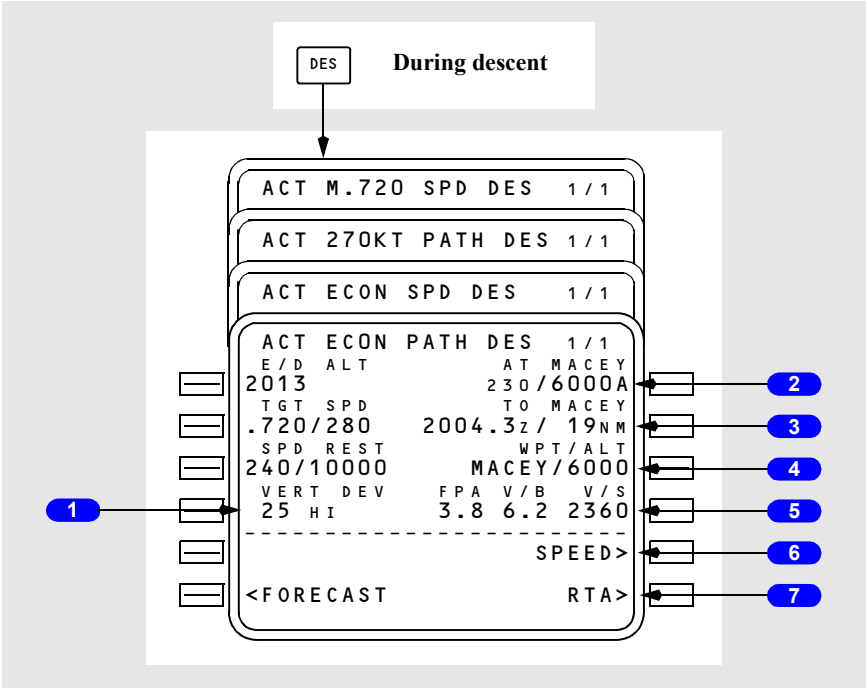

Copyright © The Boeing Company. See title page for details.

[Option – With FANS MCDU]

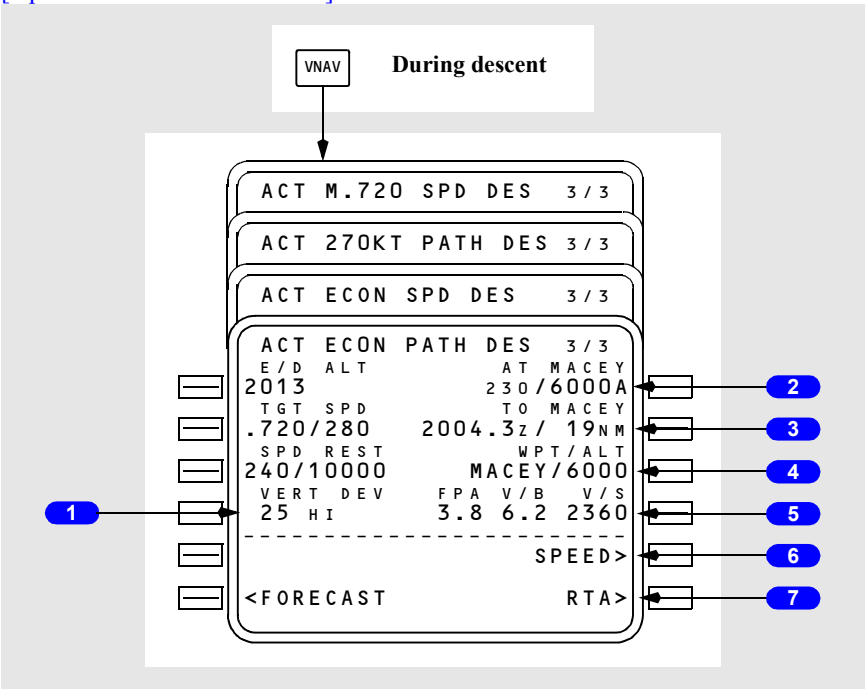

1 Vertical Deviation (VERT DEV)

Displays present deviation (feet HI or LO) from the computed vertical path.

The deviation is always in relation to the path descent profile, regardless of which page is active (PATH DES or SPD DES).

Blank if a path is not available.

2 Altitude Restriction (AT XXXXX)

Displays the next waypoint constraint from the RTE LEGS page.

The constraint is speed/altitude. If an airspeed restriction exists at the waypoint, it will be displayed in large font; otherwise the predicted speed will be displayed in small font.

Can be deleted on this page.

The display is blank when no constraint exists, or for any PATH DES page if a path descent is not available.

Copyright © The Boeing Company. See title page for details.

DO NOT USE FOR FLIGHT

3 To Waypoint (TO XXXXX)

Displays computed ETA and distance to go to T/D when not in an active descent mode.

If an early descent is in progress (initiated using DES NOW prompt), ETA and distance to go to original T/D is displayed until passing the T/D.

If a descent mode is active, displays ETA and distance to go to the first of the following points:

- the waypoint in the AT XXXXX line
- an intermediate T/D (TO T/D – XXXXX, where XXXXX is the altitude).

The display is blank if a path descent is not available, or if the AT XXXXX line is blank and no T/D information is displayed.

4 Waypoint/Altitude (WPT/ALT)

Displays the waypoint and altitude that serves as the basis for the vertical bearing (V/B) display on line 4R.

Normally displays the same waypoint/altitude restriction that is displayed on the AT XXXXX line.

May be overwritten by pilot entry.

[Option – FMC U10.5 and later]
A runway identifier may be entered for a runway at the destination airport of the displayed flight plan.

Dash prompts are displayed if there is no entry.

5 Vertical Path Parameters (FPA V/B V/S)

Displays the following parameters related to the present vertical path:.

- FPA – actual flight path angle based on present ground speed and vertical speed (that is, the present vertical bearing being flown)
- V/B – vertical bearing direct from present position on the WPT/ALT line (that is, the flight path angle required if flying direct to the waypoint and altitude on the WPT/ALT line).
- V/S – the required vertical speed (in fpm, based on present ground speed) to fly the displayed V/B.

Blank if no entry on the WPT/ALT line.

6 SPEED

Displayed on PATH DES pages.

Push – selects the related SPD DES page.

Copyright © The Boeing Company. See title page for details.

7 RTA

Displayed when DES NOW or ERASE prompt is not displayed.

Push – selects the RTA PROGRESS page.

RTA Descent Page

RTA Descent pages are displayed when an RTA mode is active. Displays are the same as on other descent pages except as noted.

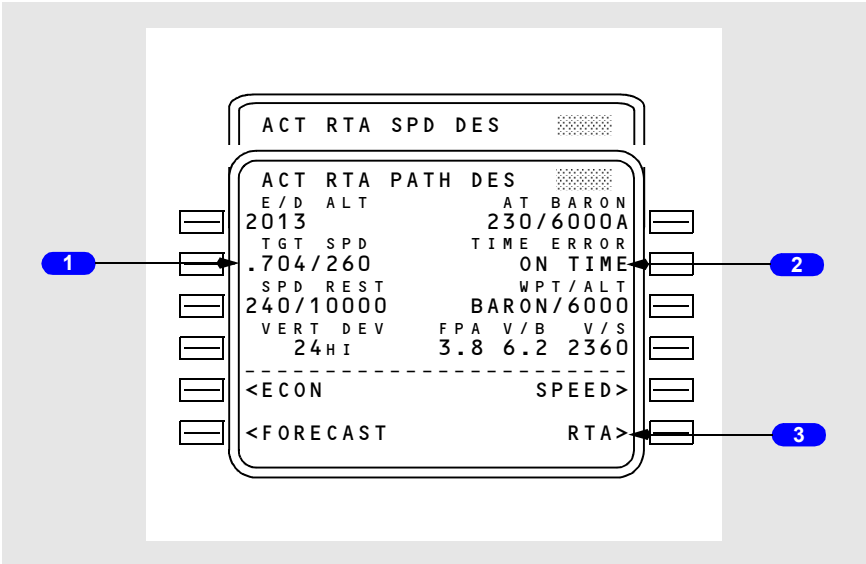

1 Target Speed (TGT SPD)

Displays computed RTA target speed.

Changes to FMC target speed if the RTA mode is exited.

2 TIME ERROR

Displays computed time error at the RTA waypoint.

Same as time error line on RTA PROGRESS page.

3 RTA

Push – selects the RTA PROGRESS page.

Copyright © The Boeing Company. See title page for details.

DO NOT USE FOR FLIGHT

Descent Forecast Page

The descent forecast page is used for pre–descent planning to enter forecast data for more precise descent path calculation.

The primary entries are wind direction and speed for up to three descent altitudes, and the altitude that anti–icing is turned on and off.

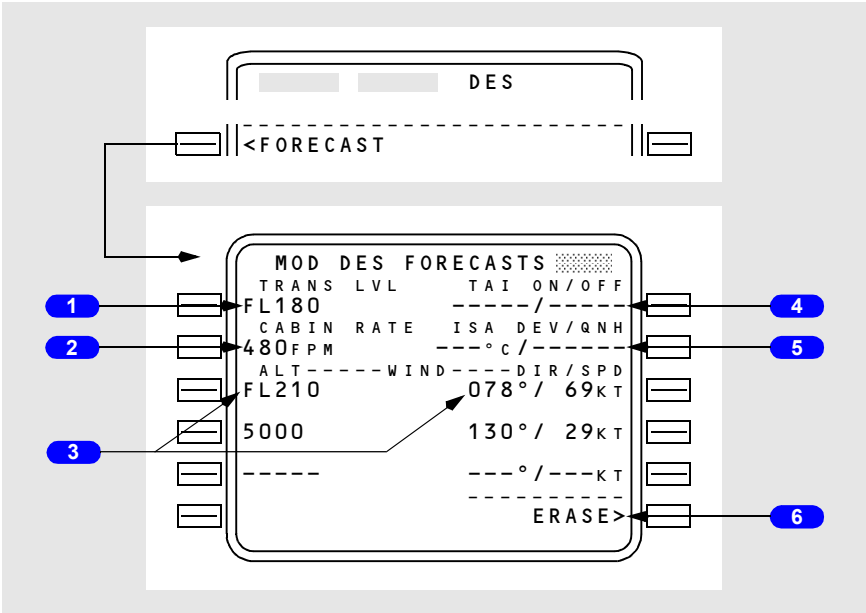

Copyright © The Boeing Company. See title page for details.

[Option – With company data link]

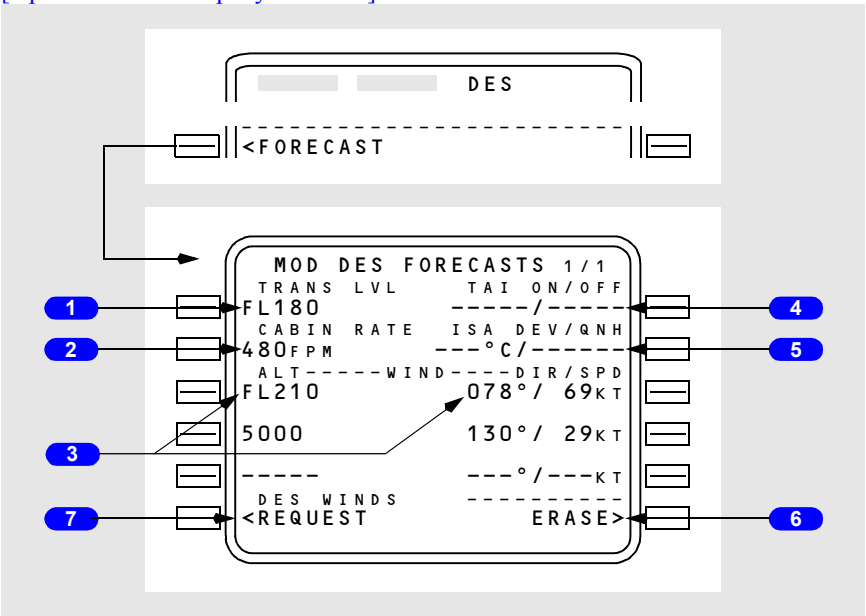

1 Transition Level (TRANS LVL)

Normally displays FL180 as the assumed descent transition level.

Changes automatically if an arrival procedure having a different stored value is entered.

Manual entry allowed and takes priority.

Data may be up-linked via ACARS message. The up-linked value will appear in small font until EXECuted at which time it will be displayed in large font.

2 CABIN RATE

Displays the predicted cabin rate of descent required by the flight plan descent profile.

3 Descent Wind (ALT – – – – – WIND – – – – DIR/SPD)

Allows entry of altitude and wind direction/speed for up to three forecast wind values.

Entries may be made in any altitude sequence and will be automatically ordered by altitude from highest to lowest.

Data may be up-linked via ACARS message. The up-linked value will appear in small font until EXECuted at which time it will be displayed in large font.

Copyright © The Boeing Company. See title page for details.

DO NOT USE FOR FLIGHT

4 Thermal Anti–Ice On/Off (TAI ON/OFF)

Enter the altitudes in flight level or feet at which anti–ice is expected to be turned on and off. This entry is informational only and has no effect on aircraft operation.

Data may be up-linked via ACARS message. The up-linked value will appear in small font until EXECuted at which time it will be displayed in large font.

5 ISA Deviation and QNH (DEV/QNH)

Enter the average ISA deviation for descent in °C (+/–XX°C) or °F (+/–XX°F)

Enter the destination QNH altimeter setting (IN. HG. or MB). Do not enter a QFE altimeter setting.

Data may be up-linked via ACARS message. The up-linked value will appear in small font until EXECuted at which time it will be displayed in large font.

6 ERASE

Push – deletes modification and returns page to previously displayed descent page.

6 ERASE or LOAD

Push – (ERASE) deletes modification and returns page to previously displayed descent page.

Push – (LOAD) initiates the loading of ACARS up-linked descent forecasts data.

LOAD is displayed when ACARS descent forecasts has the highest load priority and no EXECutes or ACCEPT/REJECTs are pending.

7 DES WINDS REQUEST
[Option – With company data link]

Push – transmits a data link request for descent winds.

Engine Out Descent

There are no specific engine out pages for descent. Use the normal descent planning features and pages.

Copyright © The Boeing Company. See title page for details.

Approach

During approach, LNAV and VNAV guidance normally transitions to the approach guidance provided by navigation radios. The FMC continues to calculate and display present position and can provide LNAV and VNAV approach guidance for certain types of approaches when radio navigation is not used.

The RTE LEGS and PROGRESS pages are used to manage the airplane until other approach guidance becomes active. Other pages which support approaches are:

- APPROACH REF page – to select the approach VREF
- ARRIVALS page – to select the desired arrival and approach procedures
- HOLD page – to manage holding patterns.

Holding is described in this section but it can be used during any phase of flight.

Arrivals Page – IFR Approaches

The arrivals page allows selection of an approach, standard terminal arrival route (STAR), and arrival transitions to the destination airport. This page can also be used to view information about a selected airport that is not the destination. Only procedures for the origin and destination airport can be selected for entry into the flight plan.

The approaches, STARS/profile descents, and transitions are displayed and selected on this page.

Copyright © The Boeing Company. See title page for details.

DO NOT USE FOR FLIGHT

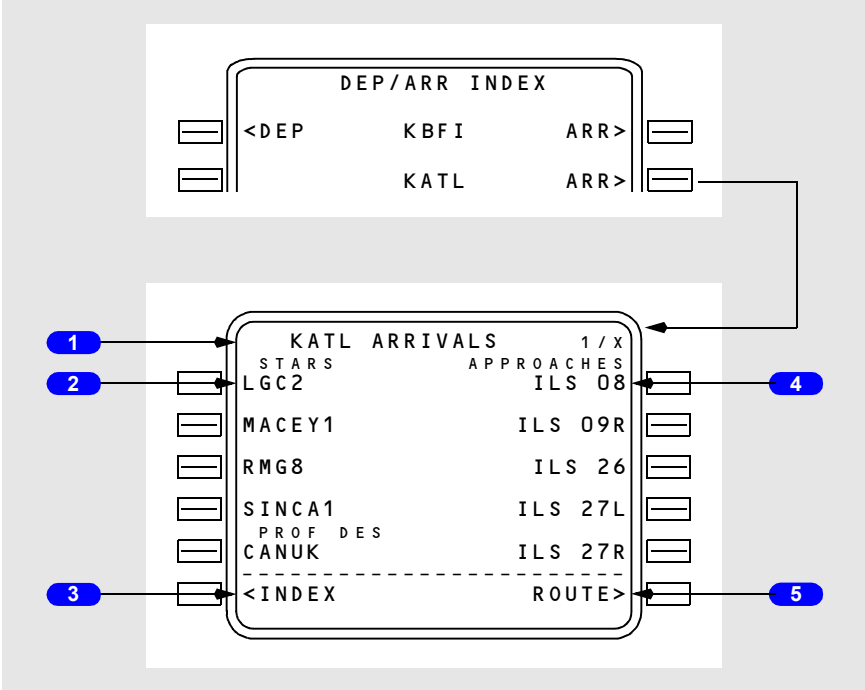

1 Page Title

The destination airport identifier is displayed in the title.

Airports with more than 5 runways or STARs produce multiple arrivals pages.

2 Standard Terminal Arrival Routes (STARS)

Upon initial selection, an alphabetical listing of all STARS and profile descents is displayed.

STARS are displayed first in a list under the STAR label. Profile descents are listed after the STARS under the PROF DES label.

Selection of the desired STAR deletes all other STARs and non–applicable approaches/runways, and displays a listing of any arrival transitions applicable to that STAR.

The selection of an approach or runway deletes all STARs not related to that approach/runway.

3 INDEX

Push – displays the DEP/ARR INDEX page.

Copyright © The Boeing Company. See title page for details.

4 Approaches and Runways (APPROACHES)

Upon initial page display, an alphabetical listing of all approaches for the airport, followed by a numerical listing of all runways, is displayed.

Selection of the desired approach or runway deletes all other approaches/runways.

5 ROUTE

Push – displays the RTE page.

Copyright © The Boeing Company. See title page for details.

DO NOT USE FOR FLIGHT

Arrivals Page during approach selection

Display after STAR selected

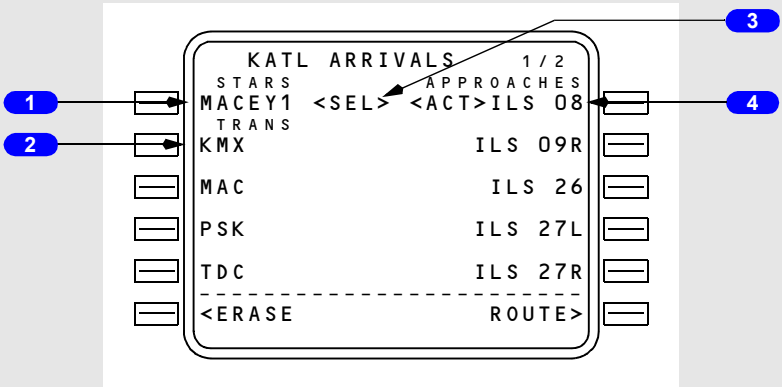

Display after STAR Transition and Approach/Runway selected

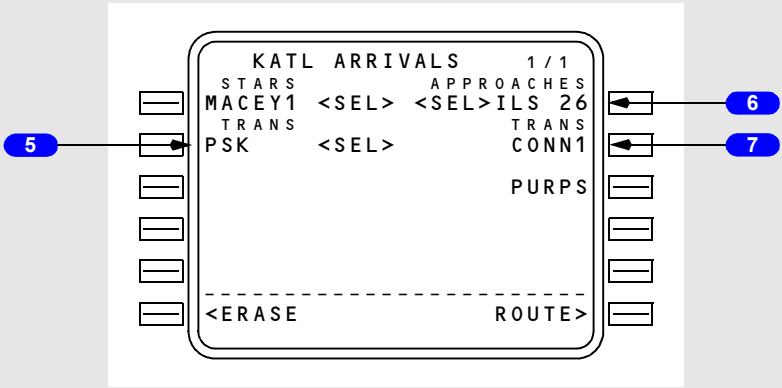

Display after executing

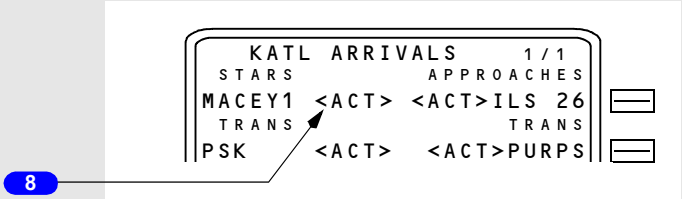

Copyright © The Boeing Company. See title page for details.

1 STARS

Displays the selected STAR.

2 Arrival Transitions (TRANS)

Displays all arrival transitions related to the selected STAR.

3 Selected Status Label (<SEL>)

Identifies arrival/approach procedures or a runway which has been selected for entry into the route, but not executed.

All <SEL> entries propagate to the MOD RTE and MOD RTE LEGS pages for subsequent execution.

4 Approach and Runway (APPROACHES, RUNWAYS)

Displays all approaches related to the selected STAR, followed by all related runways (unless the desired approach/runway was selected on the initial display).

5 Arrival Transition (TRANS)

Displays the selected arrival transition.

6 APPROACHES

Displays selected approach/runway.

7 Approach Transition (TRANS)

Displays all approach transitions related to the selected approach.

8 Active Status Labels (<ACT>)

Following execution of the selected entries, the arrival/approach procedures and runway are identified as active.

Note: For an existing active route, the execute key illuminates upon STAR or approach/runway selection. Following selections, the ERASE prompt is available. Selections should be executed on the RTE or RTE LEGS pages after linking any route discontinuities.

Copyright © The Boeing Company. See title page for details.

DO NOT USE FOR FLIGHT

Arrivals Page – Runway Extension Fix

Initial display

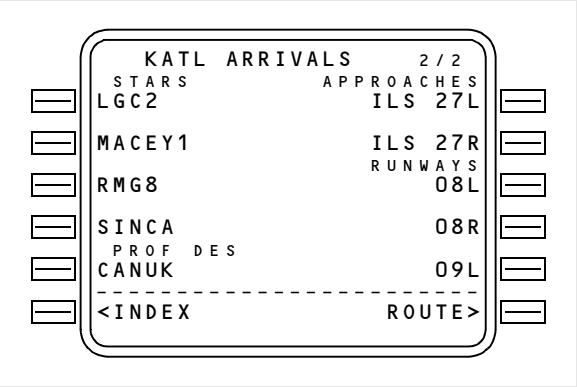

Display after runway 08L selected

Display after runway 08L extension inserted

Display after execution

Copyright © The Boeing Company. See title page for details.

1 Runway Extension (RWY EXT)

Permits entry of runway extension waypoint following selection of desired runway.

Desired extension distance is entered in scratch pad, then inserted on RWY EXT line. This creates a waypoint on the extended runway centerline at the specified distance from the threshold.

Waypoint is identified on the RTE and RTE LEGS pages as RXYYY, where YYY is the runway designation.

Copyright © The Boeing Company. See title page for details.

DO NOT USE FOR FLIGHT

Approach Reference Page

The approach reference page displays approach planning information and approach reference speed (VREF) selection. The displayed data is for the DEST airport and the arrival/ approach entered into the FMC flight plan.

[Option – FMC U10.3 and earlier]

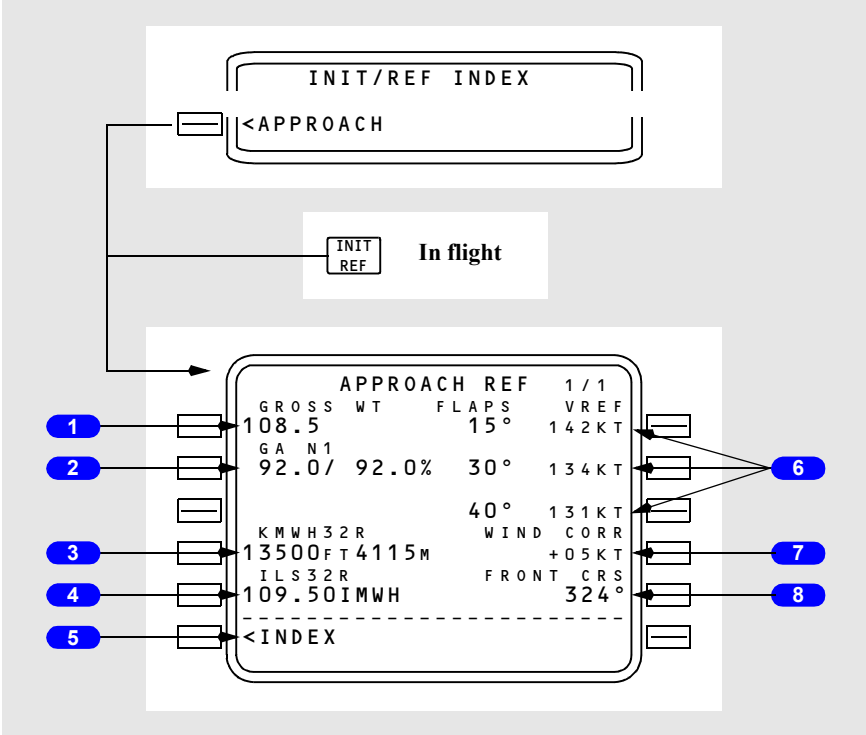

1 Airplane Gross Weight (GROSS WT)

Normally displays the FMC calculated airplane gross weight.

A manual entry of gross weight is allowed.

Displays box prompts when gross weight is not available from the FMC.

Valid entry is XXX.X.

Leaving and returning to this page replaces a manually entered weight with FMC computed gross weight.

2 Go–Around N1 (GA N1)

Displays the computed N1 go–around limit, based on present pressure altitude, temperature, and bleed configuration.

Copyright © The Boeing Company. See title page for details.

3 Runway Length

Displays the length in feet and meters of the referenced runway.

Blank if no runway has been entered and executed.

4 Approach Information

Displays the runway number and associated ILS frequency/identifier for the ILS, LOC, or back course approach in the active flight plan.

Blank if no approach has been executed.

5 INDEX

Push – selects the INIT/REF INDEX page.

6 Vref (FLAPS – – – VREF)

Displays landing Vref for three flap settings as computed by the FMC. Displayed in small size characters.

Double line selection of a displayed Vref, or manual entry of another value, causes Vref to be displayed on the airspeed display. CDU display changes to large size characters.

Speeds are based on displayed gross weights.

Double line selection provides Vref to be used by VNAV in combination with wind correction.

Vref, once selected, will not be updated. To obtain an updated speed, the current speed must be deleted or a different Vref selected or entered.

7 Wind Correction (WIND CORR)

Displays current wind correction for approach. Default is +05 knots.

Manual input of desired wind correction may be made up to +20 knots.

8 Front Course (FRONT CRS)

Displays front course for the approach displayed on ILS approach line.

Blank if no ILS approach selected.

Copyright © The Boeing Company. See title page for details.

DO NOT USE FOR FLIGHT

[Option – FMC U10.4 and later]

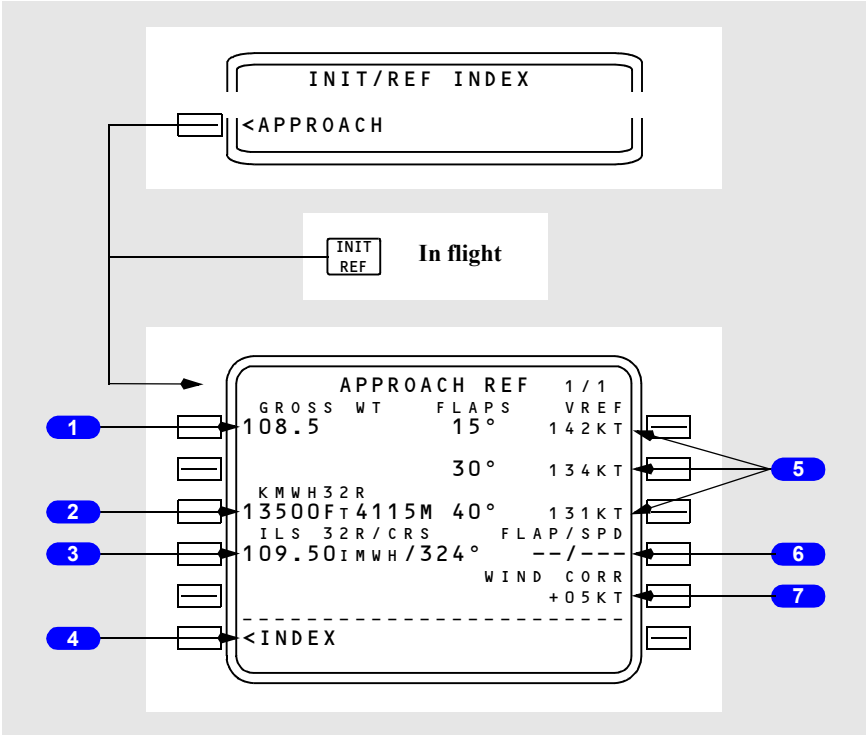

Copyright © The Boeing Company. See title page for details.

[Option – With QFE/QNH selection and alternate destination prediction]

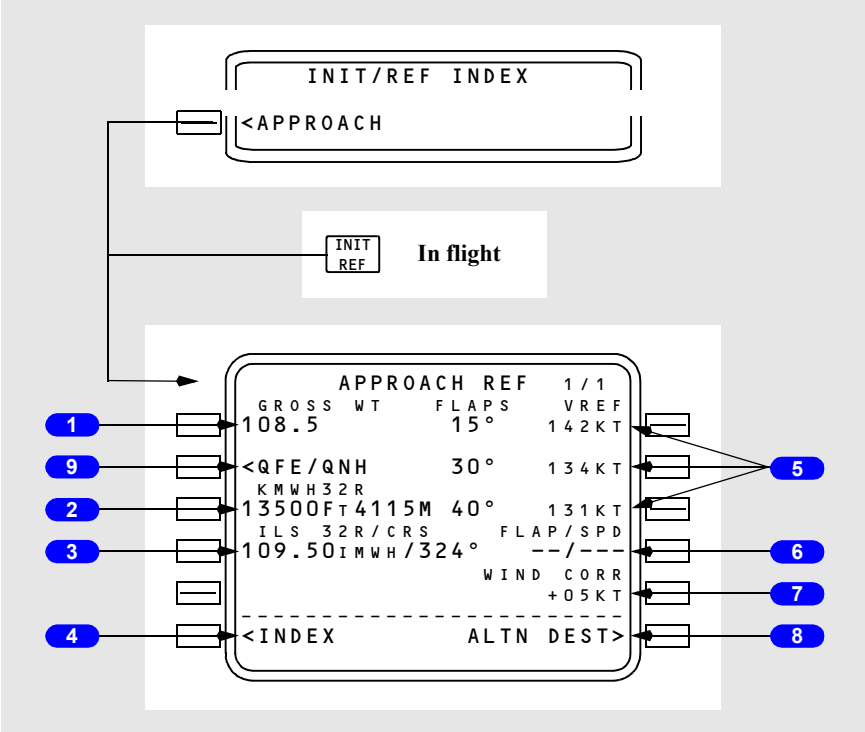

1 Airplane Gross Weight (GROSS WT)

Normally displays the FMC calculated airplane gross weight.

A manual entry of gross weight is allowed.

Displays box prompts when gross weight is not available from the FMC.

Valid entry is XXX.X.

Leaving and returning to this page replaces a manually entered weight with FMC computed gross weight.

2 Runway Length

Displays the length in feet and meters of the referenced runway.

Blank if no runway has been entered and executed.

3 Approach Information

Displays the runway number and associated ILS frequency/identifier for the ILS, LOC, or back course approach in the active flight plan.

Copyright © The Boeing Company. See title page for details.

DO NOT USE FOR FLIGHT

Displays front course, if an ILS, localizer, or localizer backcourse is displayed on 4L. If the course is true displays is suffixed with “T”.

Blank if no approach has been executed.

4 INDEX

Push – selects the INIT/REF INDEX page.

5 Vref (FLAPS – – – VREF)

Displays landing Vref for three flap settings as computed by the FMC. Displayed in small size characters.

Selection causes the flap and VREF speed to be placed in 4R.

Double line selection of a displayed Vref, or manual entry of another value, causes the flap and VREF speed to be placed in 4R and causes Vref to be displayed on the airspeed display. CDU display changes to large size characters.

Speeds are based on displayed gross weights.

Double line selection provides Vref to be used by VNAV in combination with wind correction.

Vref, once selected, will not be updated. To obtain an updated speed, the current speed must be deleted or a different Vref selected or entered.

6 Flap/Speed (FLAP/SPD)

Displays selected approach reference flap and speed setting.

[Option – FMC U10.4 or U10.4A]
If selected value is not one of the three settings displayed on lines 1R to 3R, a flaps 40 value will be utilized.

[Option – FMC U10.5 and later]
If selected value is not flaps 15, 30 or 40, a flaps 40 value will be utilized.

Manual input of desired flap and/or speed settings may be made.

Valid entry format is FF/SSS, SSS, /SSS, FF/ or F/, where F or FF is a flap setting of 0, 1, 2, 5, 10, 15, 25, 30, 40 and SSS is a speed within the range displayed in 1R to 3R.

Entries may be deleted and are blanked at flight completion..

7 Wind Correction (WIND CORR)

Displays current wind correction for approach. Default is +05 knots.

Manual input of desired wind correction may be made up to +20 knots.

Copyright © The Boeing Company. See title page for details.

8 Alternate Destination (ALTN DEST)
[Option – With alternate destination prediction]

Push – selects alternate Destination page.

9 Landing Reference (LANDING REF)
[Option – With QFE/QNH selection]

Push – Toggles altimeter reference between QFE and QNH.

Default is QNH.

Resets to QNH at flight complete.

Reflects TAKEOFF REF selection on TAKEOFF REF page 2.

Active altimeter reference is highlighted.

During descent with QFE selected, the PFD altitude indications show zero feet at the arrival runway. The PFD altitude indication background colors change to green.

If QFE is the current altimeter reference, and the EFIS control panel STD switch is pushed, The takeoff reference automatically toggles to QNH.

Copyright © The Boeing Company. See title page for details.

DO NOT USE FOR FLIGHT

Alternate Airport Diversions

[Option – With alternate destination prediction]

Alternate Dests Page 1/X

The alternate destinations pages allow the selection of alternate airports and the display of data about the alternates.

The ALTERNATE DESTS page 1/X allows entry and display of up to five alternate airports. Pages 2 through 6 allow entry and display of data related only to the selected alternate.

[Option – With company data link]

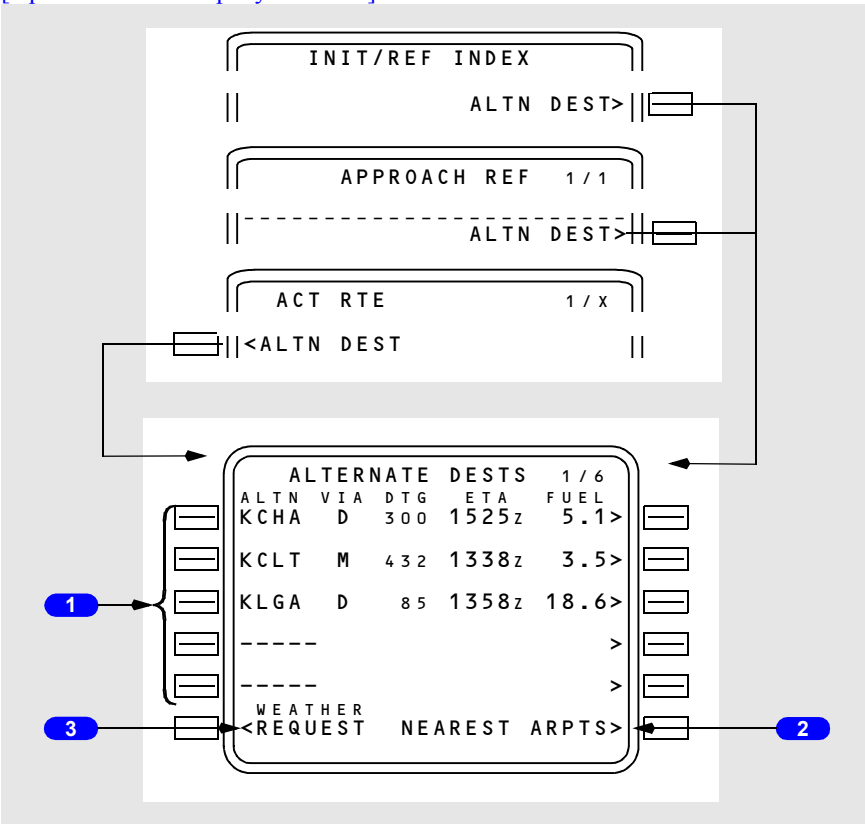

1 Alternate Airports (ALTN)

Allows entry of alternate destination. Valid entries are airports, navaids, or waypoints.

Related data (VIA, DTG, ETA, FUEL) is automatically displayed.

Copyright © The Boeing Company. See title page for details.

Push – selects page 2/X–6/X for data on selected alternate.

The DELETE function key can be used to remove manually entered alternates.

2 Nearest Airport (NEAREST ARPTS)

Push – commands FMC to search navigation database for the five airports nearest to the airplane's present position. The airports are displayed on pages 2 through 6.

Page title changes to NEAREST ARPTS.

NEAREST ARPTS prompt is replaced with PREVIOUS prompt. Selection returns display to ALTERNATE DESTS page.

Selection cannot be overwritten or deleted.

3 WEATHER REQUEST
[Option – With company data link]

Push – transmits data link request for alternate destination weather uplink.

Copyright © The Boeing Company. See title page for details.

DO NOT USE FOR FLIGHT

Alternate Dests Page X/X

The ALTERNATE DESTS pages 2 through 6 display specific information about alternate airports and the route used for diversion. All data on the page is related to the alternate airport displayed in the page title.

Two routes to the airport can be selected:

- DIRECT–TO
- MISSED APP

The calculation of ETA and fuel remaining are based on the selected route.

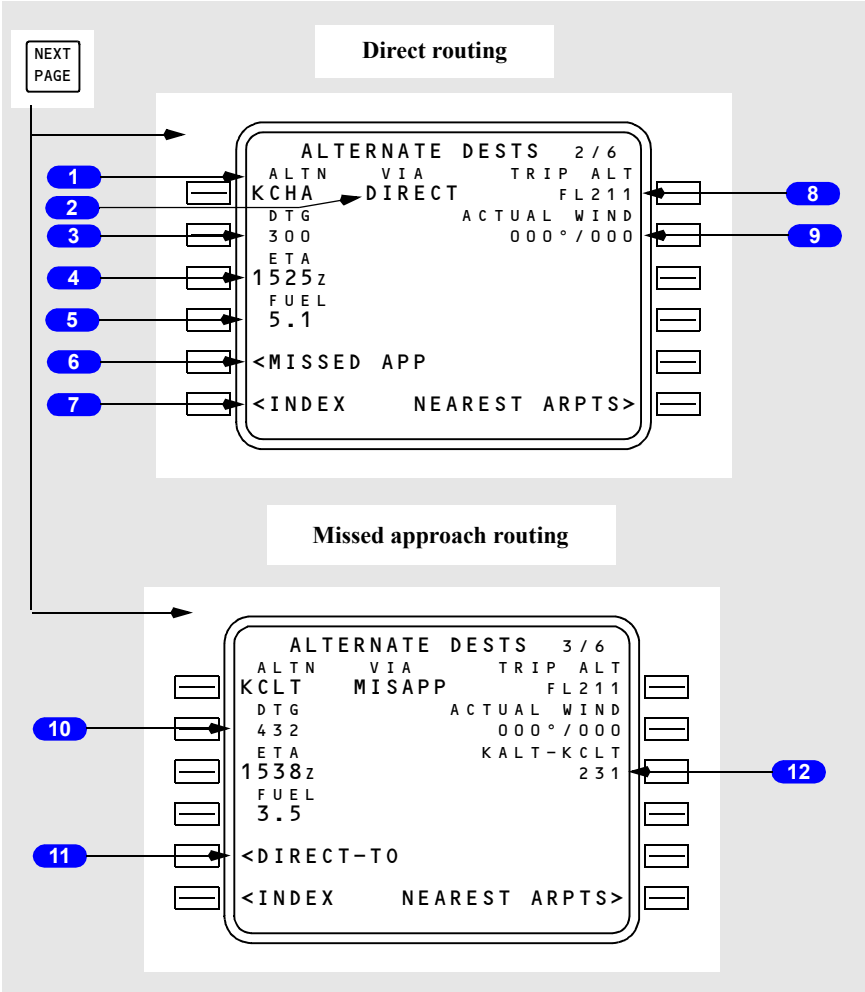

Copyright © The Boeing Company. See title page for details.

1 Alternate (ALTN)

Allows entry of alternate destination. Alternate and related information will also display on page 1/6.

2 VIA

Displays routing method used for alternate predictions.

3 Distance To Go (DTG)

Displays distance to go to alternate.

Manual entry allowed if DIRECT method is selected. Entered value will be displayed in large font.

4 Estimated Time of Arrival (ETA)

Displays estimated time of arrival at alternate.

5 FUEL

Displays fuel remaining at alternate.

6 Missed Approach (MISSED APP)

Push – changes routing method to missed approach for alternate predictions.

7 INDEX

Push – displays ALTERNATE DESTS Page 1/X.

8 Trip Altitude (TRIP ALT)

Displays computed optimum cruise altitude..

Manual entry is allowed and will be displayed in large font. If manual entry is unsuitable, display will show UNABLE.

9 ACTUAL WIND

Displays current wind direction and velocity..

If manual entry is made, heading will change to EST WIND.

10 Distance To Go (DTG)

Displays distance to go. Manual entry not allowed for missed approach routing.

11 DIRECT–TO

Push – changes routing method to direct to for alternate predictions.

Copyright © The Boeing Company. See title page for details.

DO NOT USE FOR FLIGHT

12 Destination–Alternate

Displays computed distance from destination to alternate when missed approach is selected. Distance includes missed approach procedure plus great circle distance from last waypoint in missed approach to alternate.

Manual entry is displayed in large font.

Copyright © The Boeing Company. See title page for details.

HOLD Page

The hold page is used to enter a holding pattern into the route.

When the flight plan does not have a holding pattern, push the HOLD function key to show the LEGS page with the HOLD AT line.

Two versions of the hold page are possible:

- an airway or procedure holding pattern (from the navigation database)
- a flight crew–entered holding pattern.

The holding page shows actual or default data about the holding pattern.

Entries make route modifications, which can be erased or executed.

Active holding patterns are magenta on the navigation display.

[Option – FMC U10.2 and later]

Note: During FMC guided entrance to a hold, portions of the LNAV magenta holding pattern on the navigation display may not show. This may only occur when the holding pattern is within 5000 feet of the FMC computed MAX ALT, and after the UNABLE HOLD AIRSPACE scratchpad message shows. LNAV hold entry guidance will function normally.

Copyright © The Boeing Company. See title page for details.

DO NOT USE FOR FLIGHT

[Option – FMC U10.2 and later]

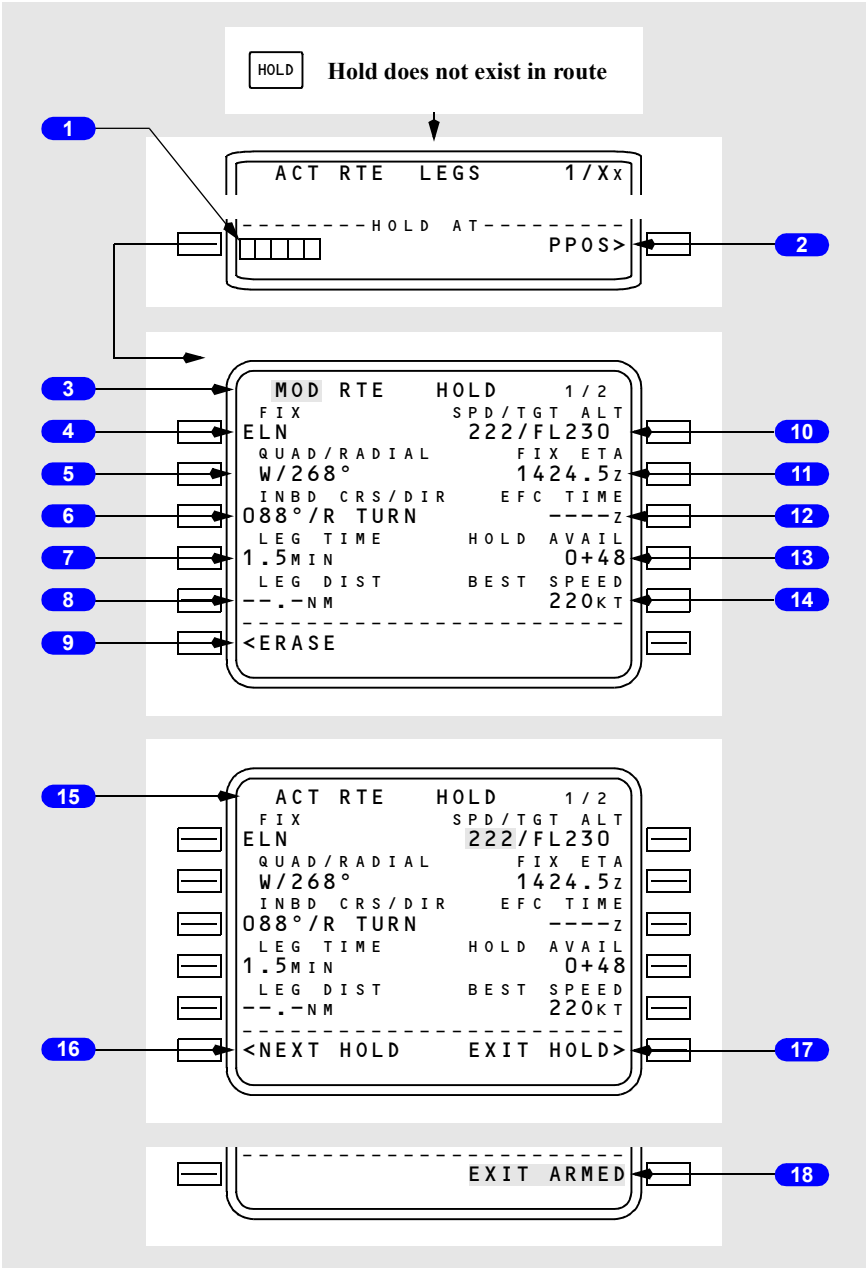

Copyright © The Boeing Company. See title page for details.

1 HOLD AT

When the HOLD function key is pushed and no holding pattern exists in the route, the LEGS page shows prompts to enter the holding fix. Enter the holding fix to show the RTE HOLD page.

Displays a prompt to enter the holding fix, a route waypoint, or present position.

A waypoint is entered as the holding fix.

2 HOLD AT Present Position (PPOS)

Selects the airplane present position as the holding fix.

3 Modified Route Hold Status

MOD indicates that the holding fix has not been executed.

Execution changes the page title to RTE HOLD (ACT RTE HOLD if holding at PPOS).

4 FIX

Displays waypoint identifier of the holding fix.

Entry is propagated either automatically from the database, or from a manual entry on the HOLD AT page.

If PPOS was selected on the HOLD AT page, then the FMC assigns PPOS as the fix identifier.

5 Quadrant/Radial (QUAD/RADIAL)

Displays holding pattern quadrant and radial.

Entry is propagated either automatically from the database, or from a manual entry on the HOLD AT page.

[Option – FMC U10.4 and later]
The default holding pattern inbound course and turn direction are in small font. Crew entered or holding patterns extracted from the database are in large font.

Valid entry is XXX (radial) or XX/XXX (quadrant/radial). Valid quadrant entry is N, NE, E, SE, S, SW, W, NW.

Quadrant shall be determined by the resulting inbound course.

6 Inbound Course/Direction (INBD CRS/DIR)

Displays holding inbound course and turn direction.

Entry is propagated either automatically from the database, or from a manual entry on the HOLD AT page.

Copyright © The Boeing Company. See title page for details.

DO NOT USE FOR FLIGHT

[Option – FMC U10.4 and later]
The default holding pattern inbound course and turn direction are in small font. Crew entered or holding patterns extracted from the database are in large font.

Valid entry is XXX (inbound course), XXX/X (inbound course/turn direction), /X or X (turn direction).

Automatically changes QUAD/RADIAL to agree.

For a flight crew–entered holding pattern, the inbound course is initially the same as the preceding leg to the fix.

For a flight crew–entered holding pattern, if no entry is made, the FMC assumes right turns.

[Option – With color]
Magenta when the holding fix is the active waypoint.

7 LEG TIME

Displays holding pattern leg time.

Valid entry is XXX.X. Manual entry has priority.

If no entry is made, the FMC assumes the standard times of 1.0 minute at or below 14,000 feet, and 1.5 minutes above 14,000 feet.

[Option – FMC U10.4 and later]
The default leg times are displayed in small font. Crew entered or holding patterns extracted from the database are displayed in large font.

[Option – FMC U10.4 and later]
The holding pattern will automatically be resized when climbing or descending through 14,000 feet, if the holding pattern size is not defined in the database or has not been manually entered.

If a LEG DIST is manually entered, then dashes will be displayed.

8 Leg Distance (LEG DIST)

Dash prompts are normally displayed.

Entry may be propagated either automatically from the database, or made by manual entry.

Manual entry has priority.

Overrides LEG TIME.

9 ERASE

Displayed only while modification is in progress.

Copyright © The Boeing Company. See title page for details.

Push – deletes modification and returns to ACT RTE HOLD page, if one exists; otherwise returns to the ACT RTE LEGS page.

10 Speed/Target Altitude (SPD/TGT ALT)

Displays current speed and altitude (small font).

Speed or altitude constraint may be entered. Manual entries are in large font and propagate to LEGS page.

Note: When a cruise hold exists, cruise speed changes propagate around the hold but have no effect on holding speed.

11 Fix Estimated Time of Arrival (FIX ETA)

Displays computed time for next passage over holding fix.

12 Expect Further Clearance Time (EFC TIME)

Entry of the EFC time will help optimize FMC performance computations.

Computation of destination fuel assumes that departure from the holding fix will occur at this time.

13 Hold Available (HOLD AVAIL)

Displays available holding time in hours + minutes remaining if destination is to be reached with planned fuel reserves as entered on PERF INIT page.

14 BEST SPEED

Displays computed best holding speed based on present altitude and conditions.

Note: May exceed maximum speed permitted by regulatory agency.

15 Active Route Hold Status

ACT indicates that the airplane has entered the holding pattern.

16 NEXT HOLD

Displayed when the route contains less than five holding patterns and there is no route modification in progress.

Push – displays (RTE LEGS) HOLD AT page and prompts for new holding fix entry.

17 EXIT HOLD

Displayed on the holding page when in the holding pattern.

Used when preparing to depart holding pattern.

Copyright © The Boeing Company. See title page for details.

DO NOT USE FOR FLIGHT

Push – changes prompt to EXIT ARMED and illuminates execute key.

[Option – FMC U10.3 and earlier]
On FMC update U10.3 and earlier, the EXIT prompt is not available until the next crossing of the holding fix, if the holding pattern is modified while being flown.

18 EXIT ARMED

Displayed on the holding page when in the holding pattern and after line selection of EXIT HOLD prompt.

Execution activates LNAV flight back to the holding fix via a shortened holding pattern, departure from holding pattern, and continued flight along the active route. ACT RTE LEGS page 1/XX appears after holding exited.

Highlighted in reverse video after execution.

Copyright © The Boeing Company. See title page for details.

RTE LEGS HOLD At (Fix in Route)

Used to enter proposed fix for racetrack holding pattern at either present position or any waypoint.

A maximum of five holding patterns may exist at one time.

Two holding patterns may exist at the same waypoint if one is in the route and the other is in the missed approach.

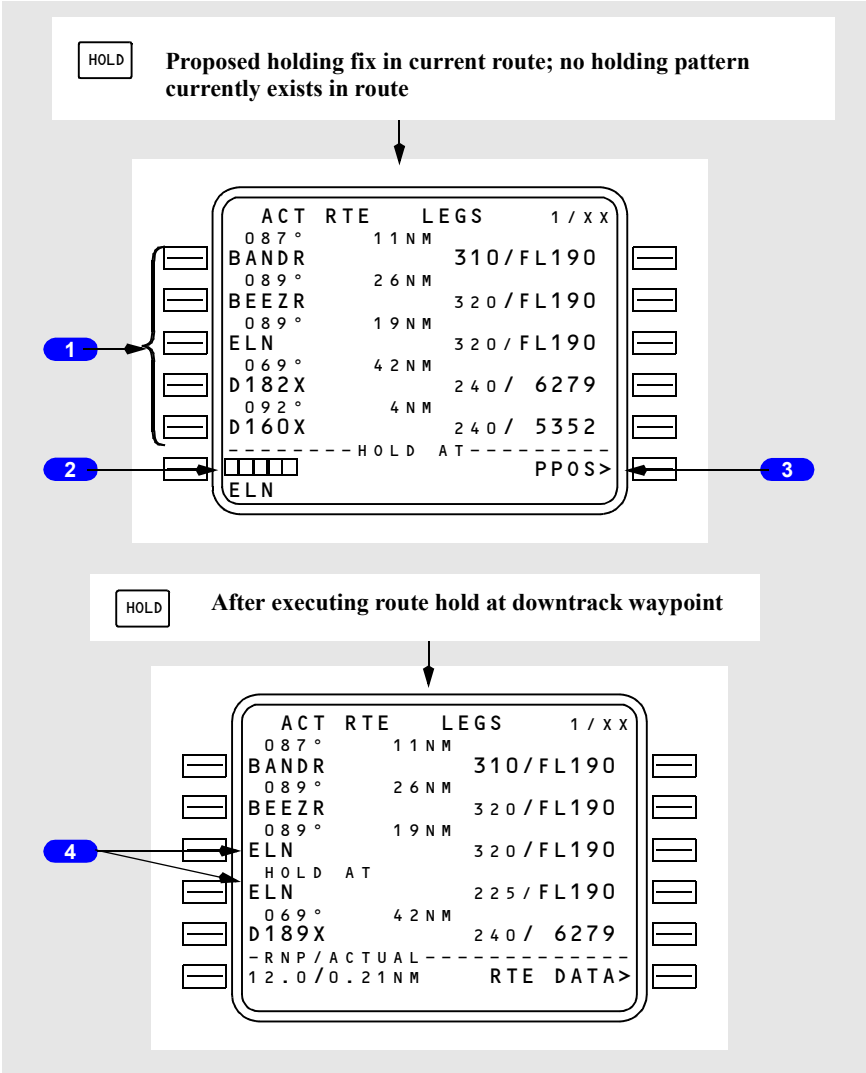

Copyright © The Boeing Company. See title page for details.

DO NOT USE FOR FLIGHT

1 Data Lines

Display same data as the corresponding RTE LEGS page.

2 HOLD AT

Used to enter any waypoint identifier, which then defines a holding fix.

Entry may be via keyboard, or by transfer of any downpath waypoint which is in the existing route (the example depicts ELN line selected into the scratch pad).

Following line selection of the desired waypoint into the box prompts, the MOD RTE HOLD page appears and the execute key illuminates.

3 Present Position (PPOS)

Push – selects holding fix at present position. The MOD RTE HOLD page appears and the execute key illuminates (“present” is at the time of execution of the MOD RTE HOLD page).

Displayed only in flight.

Default parameters are a standard holding pattern on the inbound leg.

4 Hold at Waypoints (HOLD AT)

A holding fix creates a new HOLD AT waypoint following the leg to that waypoint.

Displayed on the RTE LEGS page in the proper route sequence after executing the related MOD RTE HOLD page.

Copyright © The Boeing Company. See title page for details.

RTE LEGS HOLD AT (Fix not in Route)

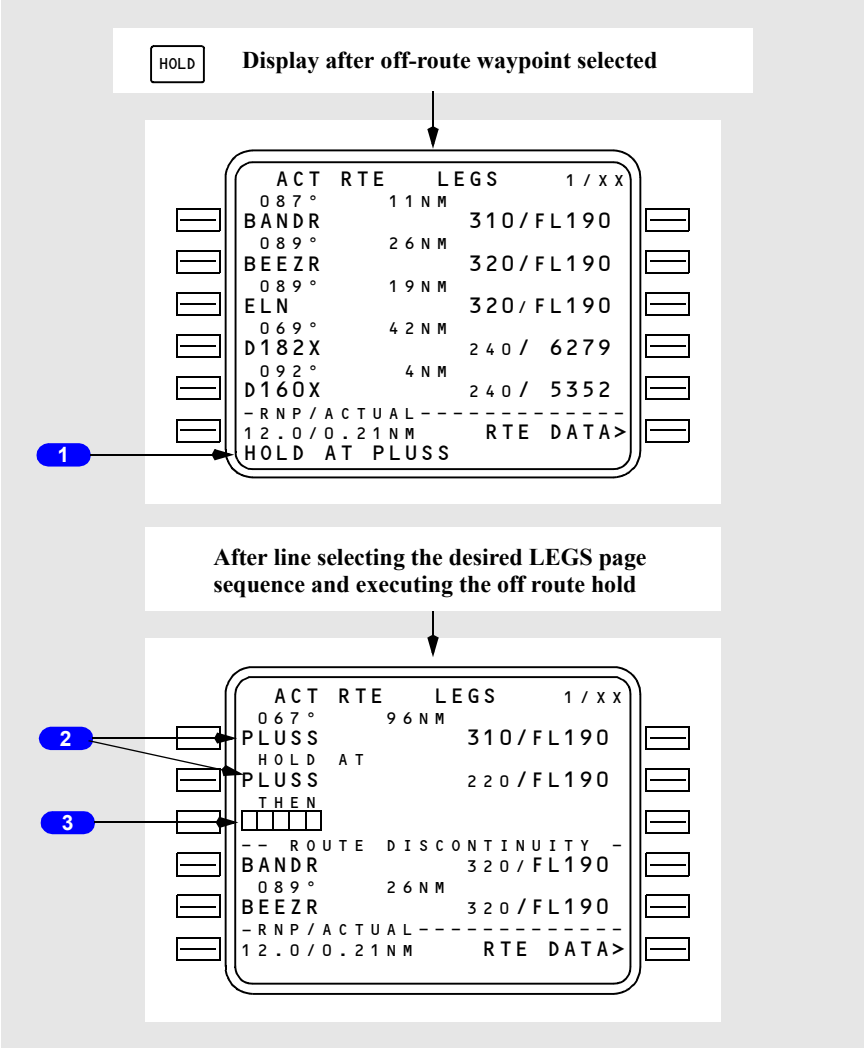

1 Hold at Waypoint (HOLD AT XXXX)

Displayed in the scratch pad whenever the entry in the HOLD AT line is not a waypoint in the existing route (the example above depicts entry of PLUSS).

Route position of the holding fix is defined by line selecting to the desired LEGS page sequence.

Following line selection to the desired LEGS page sequence, the MOD RTE HOLD page appears and the execute key illuminates.

Copyright © The Boeing Company. See title page for details.

DO NOT USE FOR FLIGHT

2 Hold at Waypoints (HOLD AT)

A holding fix creates a new HOLD AT waypoint following the leg to that waypoint.

Displayed on the RTE LEGS page in the proper route sequence after executing the related MOD RTE HOLD page.

3 ROUTE DISCONTINUITY

The entered route must always form a continuous path of linked legs.

The example depicts a HOLD AT entry where the entry was not a downpath waypoint.

The FMC computes a direct course to the off–route holding fix.

The HOLD AT waypoint becomes a termination identifier which is not part of the existing route. The resulting route discontinuity is identified by box prompts, requiring entries to define the route after PLUSS.

Copyright © The Boeing Company. See title page for details.

Introduction

FMC messages tell the flight crew when system operation is degraded or if there are data input errors.

FMC messages show in the CDU scratchpad. The messages are categorized as:

- alerting messages
- entry error messages
- advisory messages.

[Option – With company data link]

- FMC data link messages (alerting and advisory)

The FMC messages are shown according to their level of importance. Alerting messages are most important, followed by entry error messages. Advisory messages are least important. If multiple messages exist, a less important message replaces another message in the scratchpad when the CLR key is pushed or the condition is corrected.

The amber FMC alert light on each pilot's instrument panel illuminates when there is an FMC alerting message. All FMC messages illuminate the CDU message (MSG) light. Clear the message or correct the condition to cancel the message.

The following tables are general lists; some messages may not apply to all FMC configurations.

Copyright © The Boeing Company. See title page for details.

DO NOT USE FOR FLIGHT

FMC Alerting Messages

These messages relate to operationally significant conditions which affect FMC operation.

FMC alerting messages:

- are shown in the CDU scratchpad
- cause the amber FMC alert light on each pilot's instrument panel to illuminate
- illuminate message lights (MSG) on both CDUs.

Use the CLR key or correct the condition responsible for the message to remove the message. The message is temporarily removed from the scratchpad when manually entering data. The message returns when the data is removed from the scratchpad.

ALERTING MESSAGE	CAUSE	CORRECTIVE ACTION
CRZ ALT CHANGED TO XXXXX	U10.4 and later: During a missed approach a STAR or approach has been selected that conflicts with the cruise altitude.	Clear the message.
CHECK ALT TGT	U10.5 and later: VNAV disengages while airplane is between MCP and FMC altitudes or VNAV button pressed while airplane is between MCP and FMC altitudes.	Clear the message.
CUTBACK UNAVAILABLE	U10.3 and later: The FMC is unable to compute a Cutback N1 value.	Clear the message.
CYCLE IRS OFF–NAV	IRS is unable to complete alignment under current conditions.	Cycle IRS mode selector to "OFF" and back to "NAV."
DATA BASE INVALID	The automatic validity test of the permanent navigation database has failed.	Advise maintenance personnel to check the FMC and reload the database, as required. If desired, consider the use of the temporary nav database.

Copyright © The Boeing Company. See title page for details.

ALERTING MESSAGE	CAUSE	CORRECTIVE ACTION
DISCO INSRTD AFTR XXXXX (waypoint identifier)	A ROUTE DISCONTINUITY has been inserted into the flight plan due to undefined termination of a downpath leg or a double waypoint BYPASS.	Select the RTE or RTE LEGS pages and modify the waypoints for a continuous route.
DISCONTINUITY	Passing the last waypoint in the route prior to a ROUTE DISCONTINUITY (LNAV disengages) or pressing LNAV while in a discontinuity.	Select the RTE LEGS page. Enter the desired active waypoint into the box prompts. Correct any ROUTE DISCONTINUITY and EXECute. Reengage LNAV.
DUAL FMC OP RESTORED	Dual FMC operation has been successfully restored. (Dual FMC as installed)	Clear message and set FMC source select switch to NORMAL.
END OF OFFSET	Two minutes prior to passing offset leg termination.	Confirm clearance.
END OF ROUTE	LNAV engaged and passing the last waypoint in the route (LNAV disengages).	Select the RTE LEGS page. Enter the desired active waypoint into the dash prompts and EXECute. Reengage LNAV.
ENG OUT SID MOD	U10.3 and later: An engine–out SID has been automatically inserted into the flight plan as a modification.	Clear the message.
ENTER IRS POSITION	IRS in the alignment mode needs present position to complete alignment. Previous present position entry was not received back from the IRS.	Enter IRS present position into the scratchpad pad and line select 4R on the POS INIT page of the CDU. If present position was previously entered, overwrite displayed data. If necessary, enter present position directly into the IRS control /display unit.

Copyright © The Boeing Company. See title page for details.

DO NOT USE FOR FLIGHT

ALERTING MESSAGE	CAUSE	CORRECTIVE ACTION
FMC APP/TUNE DISAGREE	U10.5 and later: An approach that utilizes FMC generated glidepath is in the active flight plan but an approach navaid (ILS/GLS) has been tuned with G/S ON.	Select G/S OFF on the APPROACH REF page or set a G/S compatible approach in the active flight plan. Clear the message.
FMC APP MODE UNAVAIL–QFE	U10.5 and later: An approach that utilizes FMC generated glidepath is in the flight plan (active or inactive) but QFE is selected on the FMC.	Select QNH as the landing altimeter reference on the APPROACH REF page. Clear the message
FMC APP MODE UNAVAIL–GP	U10.5 and later: An approach that utilizes FMC generated glidepath is in the flight plan (active or inactive) but the final approach angle check has failed.	Select an alternate approach. Clear the message.
INSUFFICIENT FUEL	A change in conditions or flight plan route causes predicted fuel at destination to be 900 kilograms/2000 lbs or less.	Modify the route plan or cruising altitude, or divert for additional fuel.
IRS MOTION	IRS has automatically restarted the alignment due to detection of excessive motion.	Clear message and attempt to reduce airplane movement, if practicable.
IRS NAV ONLY	U10.2A and earlier: Navigation accuracy is not sufficient for present phase of flight.	Refer to FMC Navigation Check Supplementary Procedure.
LNAV BANK ANGLE LIMITED	U10.2 and later: 5 minutes prior to an LNAV guided course change that may exceed airway/route boundary due to LNAV performance limited bank angle.	Review the LNAV course change. If course change exceeds airway/route boundary, consider flight plan change.

Copyright © The Boeing Company. See title page for details.

ALERTING MESSAGE	CAUSE	CORRECTIVE ACTION
MAX ALT FLXXX (flight level value)	Altitude intervention (as installed) attempt to raise cruise altitude when MCP altitude is above maximum altitude.	Clear the message.
MISSED CAPTURE	Proper localizer capture maneuver was performed, but the AFDS did not capture.	Clear the message.
MODEL/ENG DATA INVALID	A valid performance database is not available.	Contact maintenance personnel.
NAV DATA OUT OF DATE	Effectivity dates of nav database do not agree with date input from clock.	Check the IDENT page and reverse the dates for ACTIVE NAV DATA if required.
NAV INVALID–TUNE XXXXX (navaid identifier)	FMC is unable to auto–tune or receive the navaid for a RNAV or VOR approach procedure.	Cross–check radios and manually tune the desired navaid.
OVERSPEED DISCONNECT	U10.1 and earlier: During path descent and below the speed restriction altitude, VNAV disengages when airspeed exceeeds FMC speed restriction by more than 15 knots. U10.2 and later: During path descent and above or below the speed restriction altitude, VNAV disengages when airspeed exceeeds FMC speed restriction by more than 15 knots.	Manually reduce speed and reengage VNAV.
PARTIAL ROUTE LOADED	U10.3 and later: A route is loaded which references data not contained in the database.	Clear the message.
PERF DEFAULTS INVALID	Validity check of performance defaults database has failed.	Contact maintenance personnel.

Copyright © The Boeing Company. See title page for details.

DO NOT USE FOR FLIGHT

ALERTING MESSAGE	CAUSE	CORRECTIVE ACTION
RESET MCP ALT	Within 5 NM of the top–of–descent point without selecting a lower altitude on the AFDS MCP.	Select lower MCP altitude values as clearances permit.
RESET MCP APP MODE	U10.5 and later: A change in the expected approach is made with an FCC approach mode armed or engaged.	Clear and rearm FCC approach mode. Clear the message.
RTA UNACHIEVABLE	The RTA is not in the computed RTA window under current parameters.	Enter an achievable RTA or discontinue the RTA mode of navigation. Adjust parameters to meet the RTA.
RW/APP TUNE DISAGREE	U10.4 and later: During approach, manual tuned approach frequency or channel does not match active flight plan.	Clear the message and select correct approach frequency.
RW/APP CRS ERROR	U10.4 and later: During approach, MCP selected course does not match front course for the approach in the active flight plan.	Clear the message and select correct MCP course.
SCANNING DME FAIL	Inputs from both frequency scanning DME radios have failed.	Clear the message and check position. Radio updating of FMC position is not available.
SELECT MODE AFTER RTA	RTA mode has been discontinued due to sequencing of RTA waypoint or RTA waypoint has been removed from the flight plan.	Select desired navigation mode. (ECON, manual speed, etc.)

Copyright © The Boeing Company. See title page for details.

ALERTING MESSAGE	CAUSE	CORRECTIVE ACTION
SINGLE FMC OPERATION	The primary FMC has determined that the secondary FMC is not available. (Dual FMC as installed.	If the FMC source selector switch is in the “Normal” position, move to “BOTH ON L”. No action is required if the FMC source selector switch is already positioned to “BOTH ON L” or “BOTH ON R”.
TAKEOFF SPEEDS DELETED	U10.1 and later: New performance data is entered after the V speeds have been entered on the TAKEOFF REF page, or a takeoff thrust selection change is entered after the V speeds have been entered. or U10.0: Runway or runway data is changed after the V speeds have been entered.	Select new V speeds.
THRUST REQUIRED	U10.5 and later: Airplane is in an underspeed condition..	Clear the message. Increase airspeed to within 15 knots of speed target.
UNABLE HOLD AIRSPACE	U10.2 and later: LNAV guided holding pattern may exceed allowable hold airspace due to LNAV performance limited bank angle.	Review the holding pattern. If holding pattern exceeds allowable holding airspace, consider flight plan change.

Copyright © The Boeing Company. See title page for details.

DO NOT USE FOR FLIGHT

ALERTING MESSAGE	CAUSE	CORRECTIVE ACTION
UNABLE NEXT ALTITUDE	Unable to meet the next flight plan altitude constraint in a VNAV SPD climb or descent. The message appears only with VNAV engaged. U10.4 and later: Unable to meet the next flight plan altitude constraint in a VNAV climb or descent. The message appears only with VNAV engaged.	Clear the message and review the prediction. For undershoot condition during climb, consider selection of MAX RATE CLB or MAX ANGLE CLB, or a different N1 limit as appropriate.
UNABLE REQD NAV PERF–RNP	U10.2A and earlier: FMC actual navigation performance is not sufficient for the current special RNP (crew entered or leg specified). U10.3 and later: FMC actual navigation performance is not sufficient for the displayed RNP.	Refer to FMC Navigation Check supplementary procedure.
VERIFY GW AND FUEL	Fuel data becomes invalid, PERF INIT fuel value is replaced with dashes. FMC uses last valid fuel quantity for performance predictions until manual entry is made. Shows if 30 minutes have elapsed since last manual entry. Does not show in descent with Vref selected.	Enter fuel weight on PERF INIT page 1/2. Periodic update of fuel weight is required to keep gross weight value current.
VERIFY POSITION	Position information is contradictory. Inhibited during approach.	Refer to FMC Navigation Check Supplementary Procedure.

Copyright © The Boeing Company. See title page for details.

ALERTING MESSAGE	CAUSE	CORRECTIVE ACTION
VERIFY RNP	U10.2A and earlier: Underlying RNP value is less than manually entered value or a GPS approach has been selected and the default RNP is active (no crew entered or leg specified RNP active). U10.3 and later: Underlying RNP value is less than manually entered value.	Enter appropriate RNP.
VERIFY TAKEOFF SPEEDS	A PERF INIT change has been made after takeoff speeds were specified.	On TAKEOFF REF page 1, accept previous V speeds, or reject previous V speeds and enter new V speeds.
VERIFY VERT RNP	U10.5 and later: During an active descent with CDS LNAV/VNAV deviation scales enabled, a manually entered vertical RNP is greater than the default vertical RNP.	Clear CDU message. Enter appropriate vertical RNP.
VNAV DISCONNECT	The criteria for VNAV engagement is not satisfied (VNAV disengages). U10.4 and later: On approach, with VNAV engaged, the FCC has switched to LVL CHG.	Manually control the vertical path.

Copyright © The Boeing Company. See title page for details.

DO NOT USE FOR FLIGHT

FMC Entry Error Messages

These messages relate to incorrect scratchpad entries. FMC entry error messages:

- are shown in the CDU scratchpad
- illuminate the message light (MSG) of the CDU where the entry error was made
- temporarily overwrite data in the scratchpad.

Use the CLR key or key in new data to remove the message. If the CLR key is used to remove the message, the data previously entered is once again displayed. If new data is keyed in over the message, the message and the data previously entered are removed.

ENTRY ERROR MESSAGE	CAUSE	CORRECTIVE ACTION
ALT CONSTRAINT XXXXX (waypoint identifier)	A flight plan modification has caused an altitude conflict with a waypoint that has an altitude constraint.	Clear the message and revise the entry.
DATA BASE FULL	Entry attempted into a supplemental or temporary navigation database category which is full.	Go to the NAV DATA pages and delete unneeded waypoints, navaids, or airports from the appropriate database and re–attempt entry.
DUPLICATE FLIGHT PLAN ID	U10.3 and later: The entry attempted is a duplicate of an existing supplemental flight plan name.	Clear the message and select a unique flight plan name.
INVALID DELETE	DEL key operation was attempted for a data line to which it was not applicable.	Clear the message and select the proper line after the DEL key is pressed.
INVALID ENTRY	Attempted data entry has incorrect format, range, etc. for the selected data line. Entered RTA waypoint is not in the flight plan.	Clear the message and scratchpad entry, and repeat the entry with the correct data.
INVALID QUAD	U10.2 and later: Attempted HOLD page QUAD entry has incorrect format or range.	Clear the message and revise the QUAD entry.

Copyright © The Boeing Company. See title page for details.

ENTRY ERROR MESSAGE	CAUSE	CORRECTIVE ACTION
NO OFFSET AT LEG XXXXX (waypoint)	Attempted entry of a lateral offset start or end waypoint XXXXXX that is not offsetable (lateral offset as installed).	Clear the message and amend the route.
NOT IN DATA BASE	FMC does not contain the required data for the entered identifier.	Clear the message and check data entry, or enter the required information into the supplemental or temporary navigation database via the NAV DATA pages.
NOT IN FLIGHT PLAN	RTA waypoint or lateral offset (as installed) start/end waypoint entry is not in active flight plan.	Clear the message and amend the entry.
ROUTE FULL	Entry of more than maximum allowed number of waypoints or holding patterns attempted.	Clear the message and review existing and desired waypoints and holding patterns for possible deletion.
SUPP RTE DATA BASE FULL	U10.3 and later: Attempted save of the 11th supplemental flight plan.	Clear the message, delete unneeded supplemental flight plans and re–attempt entry.

Copyright © The Boeing Company. See title page for details.

DO NOT USE FOR FLIGHT

FMC Advisory Messages

These messages relate to FMC status. FMC advisory messages:

- are shown in the CDU scratchpad
- illuminate message lights (MSG) on both CDUs.

Use the CLR key or correct the condition responsible for the message to remove the message. The message is temporarily removed from the scratchpad when manually entering data. The message returns when the data is removed from the scratchpad.

ADVISORY MESSAGE	CAUSE	CORRECTIVE ACTION
ABOVE MAX CERT ALT	The airplane is above its maximum certified altitude.	Descend to an altitude below the maximum certified altitude.
APPRCH VREF NOT SELECTED	Airplane has transitioned into approach environment and Vref has not been selected on APPROACH REF page.	Select Vref on APPROACH REF page.
ARR N/A FOR RUNWAY	Runway or approach does not match the selected arrival procedure.	Go to the ARRIVALS page and modify selection.
BUFFET ALERT	Current conditions result in a maneuver margin less than specified.	Bring the airplane back within the operating envelope.
CHECK FMC FUEL QUANTITY	The FMC has detected an unexpected drop in the fuel quantity.	Check the fuel quantity indications for correctness.
DES PATH UNACHIEVABLE	When in path descent and above the path, the FMC predictions show the profile restrictions at the next waypoint cannot be achieved (LNAV remains engaged).	Modify the restrictions.
DRAG REQUIRED	Airspeed is 10 kts or more above FMC target speed or within 5 kts of Vmo/Vmmo.	Use speedbrakes, trim or reduced thrust, as required, to bring the airplane within 5 kts of FMC target speed.
INVALID OFFSET	Desired offset does not meet FMC offset criteria.	Clear the message and amend the entry.

Copyright © The Boeing Company. See title page for details.

ADVISORY MESSAGE	CAUSE	CORRECTIVE ACTION
KEY/FUNCTION INOP	A mode key is pressed for which an FMC function has not been implemented or has not been enabled. (FANS MCDU only)	Clear the message and select another CDU page for display.
LOC CAP ACTIVE	The airplane is approaching its turn onto the localizer or GLS course and will maintain an intercept heading.	Clear the message manually, or wait for the AFDS to signal reset status to the FMC.
LOC CAP CANCELLED	Flight plan modifications or the airplane condition did not facilitate localizer capture.	Clear the message manually, or wait for the AFDS to reset to LOC CAP ACTIVE.
MAX ALT FLXXX (flight level value)	Altitude entry on any page is above the maximum altitude for current selected performance margins.	Clear the message or amend the data entry.
MAX MACH .XXX/MIN MACH .XXX OR MAX CAS .XXX/MIN CAS .XXX	FMC target speed is greater than the maximum or less than the minimum buffet speed for the entered cruise or step climb altitude.	Change the target speed to within the message limits or enter a lower altitude.
MCP APP DISARM REQD	U10.4 and U10.4A: A change in the expected vertical approach control from glideslope (G/S) to FMC generated glidepath (G/P) is required. U10.5 and later: A change in the expected approach is made with an FCC approach mode armed or engaged.	Clear the message. Change the active flight plan approach to one that utilizes FMC generated glidepath. Insure G/S is turned off. Re-arm approach mode if required.
NO DES PATH AFTER XXXXX (waypoint)	FMC is unable to construct a PATH DES that satisfies all altitude restrictions after XXXXX.	Modify speed or altitude restrictions on the RTE LEGS pages.

Copyright © The Boeing Company. See title page for details.

DO NOT USE FOR FLIGHT

ADVISORY MESSAGE	CAUSE	CORRECTIVE ACTION
NOT ON INTERCEPT HEADING	Airplane is not within the LNAV capture criteria for the active leg (LNAV disengages).	Manually place the airplane on an intercept heading and reengage LNAV.
OFFSET DELETED	The entered start waypoint has been deleted from the flight plan. (lateral offset as installed)	Clear the message and amend the route.
OFST ENDS ABEAM XXXXXX	An invalid offset leg exists between the end waypoint (XXXXXX) and the start of offset or no end waypoint exists.	Clear the message and amend the route.
PERF DEFAULTS DELETED	Performance database has been automatically deleted due to conflict with performance database limits.	Contact maintenance personnel.
PROGRAM PIN ERROR	FMC connector wiring is incorrect.	System unusable; advise maintenance personnel. The CLR key will not clear the message.
PROGRAM PIN NOT IN DB	FMC connector wiring or performance database is incorrect.	Contact maintenance personnel.
RESET MCP ALT	FMC operation cannot take airplane away from the AFDS MCP altitude.	Select a MCP altitude value in the proper direction (higher for climb, lower for descent).
RUNWAY N/A FOR SID	The selected runway is not applicable to the selected departure procedure.	Clear the message and check selections on the DEPARTURES page. Modify as required.
SELECT ACTIVE WPT/LEG	Power–up restart or insertion of a different flight plan while airborne.	EXECute a direct–to or leg intercept to tell the FMC which leg of the route is active.
STEEP DESCENT AFTER XXXXXX	An excessive vertical discontinuity exists after point XXXXXX.	Check routing.

Copyright © The Boeing Company. See title page for details.

ADVISORY MESSAGE	CAUSE	CORRECTIVE ACTION
TAI ON ABOVE 10°C	Airplane is operating with anti–icing with TAT above +10°C.	Clear the message and check the use of anti–icing for engines and/or wings.
UNABLE CRZ ALT	FMC predicts that the airplane cannot reach the new CRZ ALT due to performance limitations. FMC predicts that no cruise time is possible at the entered CRZ ALT.	Clear the message and review the CRZ ALT selection. Clear the message and review the CRZ ALT selection.
UNABLE MACH .XXX	The entered cruise Mach is unattainable based on present gross weight.	Select a smaller Mach number or wait until gross weight is reduced sufficiently.
UNABLE TO OFFSET	A valid offset cannot be constructed due to geometric limitations.	Clear the message and amend the route.
USING RSV FUEL	Predicted fuel remaining at DEST is less than the RESERVES entry on the PERF INIT page.	Clear the message and change routing if required.
V SPEEDS UNAVAILABLE	FMC cannot compute V speeds (as installed) due to unreasonable inputs on the RTE, PERF INIT, or TAKEOFF REF pages.	Correct inputs that affect V speed computation.
VERIFY RNP VALUE	When entering an RNP the underlying RNP value is smaller than the manually entered value or the ANP is greater than the manually entered RNP.	Change or delete the manually entered RNP.

Copyright © The Boeing Company. See title page for details.

DO NOT USE FOR FLIGHT

ADVISORY MESSAGE	CAUSE	CORRECTIVE ACTION
VERIFY VERT RNP VALUE	U10.5 and later: With CDS LNAV/VNAV deviation scales enabled, a manually entered vertical RNP is greater than the default vertical RNP or manually entered vertical RNP is less that vertical ANP.	Clear the message. Change or delete the manually entered RNP.
XXXX (airport identifier)	A REF AIRPORT is entered on the POS INIT page and no entry of ORIGIN yet appears on RTE page 1.	Enter the airport identifier on the ORIGIN data line.
XXXXX (MCP altitude value)	With the CRZ page displayed, resetting the AFDS MCP altitude to a value different from the CRZ ALT causes the value to appear in the scratchpad.	Enter the MCP altitude value on the appropriate target altitude data line.

Copyright © The Boeing Company. See title page for details.

FMC Data Link Messages

[Option – With company data link]

These messages relate to FMC data link message status. FMC data link alerting and advisory messages function the same as the alerting and advisory messages described above:

FMC Data Link Alerting Messages

ALERTING MESSAGE	CAUSE	CORRECTIVE ACTION
ALTN DEST UPLINK	An FMC alternate destinations uplink message has been loaded on the ALTERNATE DESTS page, and is ready for flight crew review. (Alternate destinations as installed)	Review the alternate destinations uplink.
CRZ WIND UPLINK LOADING	An FMC cruise wind uplink message is loading (after LOAD selected on the RTE DATA page).	Wait for load to complete.
CRZ WIND UPLINK READY	An FMC cruise wind uplink message has been received and is available for loading on the RTE DATA page.	Select RTE DATA page, LOAD cruise wind, and execute or ERASE.
CRZ WIND XXXXX (cruise altitude) UPLINK	An FMC cruise wind uplink message has been loaded on the RTE DATA page, and is ready for flight crew review.	Review the cruise wind uplink, and execute or ERASE.
DATALINK CONFIG INVALID	Validity check of the FMC datalink configuration file has failed.	Contact maintenance personnel.
DESCENT FORECASTS UPLINK	An FMC descent forecasts uplink message has been loaded on the DESCENT FORECASTS page, and is ready for flight crew review.	Review the descent forecasts uplink, and execute or ERASE.

Copyright © The Boeing Company. See title page for details.

DO NOT USE FOR FLIGHT

ALERTING MESSAGE	CAUSE	CORRECTIVE ACTION
FORECASTS UPLINK READY	An FMC descent forecasts uplink message has been received and is available for loading on the DESCENT FORECASTS page.	Select DESCENT FORECASTS page, LOAD descent forecasts winds, and execute or ERASE.
INVALID TAKEOFF XXX/YYY (runway or runway/intersection identifier)	Runway (RTE page) or runway/intersection (TAKEOFF REF page) has been entered that matches runway takeoff data in FMC memory. However, the airplane is performance limited for the selected runway.	Clear the message. Enter correct takeoff data, request new takeoff data uplink, or enter new runway or runway/intersection identifier.
NAV DATA LOADING	An FMC supplemental navigation data uplink message has been received and is loading.	Wait for load to complete.
NAV DATA UPLINK	An FMC supplemental navigation data uplink message has been loaded on the SUPP NAV DATA page, and is ready for flight crew review.	Review the supplemental navigation data uplink, and execute or ERASE.
PARTIAL ALTN DEST UPLINK	An FMC alternate destinations uplink message has been loaded on the ALTERNATE DESTS page, but errors were encountered during the loading process. (Alternate destinations as installed)	Review the alternate destinations uplink, and execute or ERASE.
PARTIAL FORECASTS UPLINK	An FMC descent forecasts uplink message has been loaded on the DESCENT FORECASTS page, but errors were encountered during the loading process.	Review the descent forecasts uplink, and execute or ERASE.

Copyright © The Boeing Company. See title page for details.

ALERTING MESSAGE	CAUSE	CORRECTIVE ACTION
PARTIAL LIMITS UPLINK	An FMC performance limits uplink message has been loaded on the PERF LIMITS page, but errors were encountered during the loading process.	Review the performance limits uplink, and execute or ERASE.
PARTIAL NAV DATA UPLINK	An FMC supplemental navigation data uplink message has been loaded on the SUPP NAV DATA page, but errors were encountered during the loading process.	Review the supplemental navigation data uplink, and execute or ERASE.
PARTIAL PERF INIT UPLINK	An FMC performance initialization uplink message has been loaded on the PERF INIT page, but errors were encountered during the loading process.	Review the performance initialization uplink, and execute or ERASE.
PARTIAL ROUTE UPLINK	An FMC route uplink message has been loaded on the RTE page, but errors were encountered during the loading process.	Review the route uplink, and execute or ERASE.
PERF INIT UPLINK	An FMC performance initialization uplink message has been loaded on the PERF INIT page, and is ready for flight crew review.	Review the performance initialization uplink, and execute or ERASE.
PERF INIT UPLINK READY	An FMC performance initialization uplink message has been received and is available for loading on the PERF INIT page.	Select PERF INIT page, LOAD performance initialization data, and execute or ERASE.
PERF LIMITS UPLINK	An FMC performance limits uplink message has been loaded on the PERF LIMITS page, and is ready for flight crew review.	Review the performance limits uplink, and execute or ERASE.

Copyright © The Boeing Company. See title page for details.

DO NOT USE FOR FLIGHT

ALERTING MESSAGE	CAUSE	CORRECTIVE ACTION
PERF LIMITS UPLINK READY	An FMC performance limits uplink message has been received and is available for loading on the PERF LIMITS page.	Select PERF LIMITS page, LOAD performance limits, and execute or ERASE.
RESEND MESSAGE	An FMC downlink message was attempted, but the FMC was unable to deliver the message to the ACARS MU.	Re–send the downlink message.
ROUTE DATA UPLINK	An FMC route uplink message has been loaded on the RTE page, and is ready for flight crew review.	Review the route uplink, and execute or ERASE.
ROUTE UPLINK LOADING	An FMC route uplink message is loading (after LOAD selected on the RTE page).	Wait for load to complete.
ROUTE UPLINK READY	An FMC route uplink message has been received and is available for loading on the RTE page.	Select RTE page, LOAD route, and execute or ERASE.
RTA DATA UPLINK	An FMC RTA uplink message has been loaded on the RTA PROGRESS page, and is ready for flight crew review.	Review the RTA uplink, and execute or ERASE.

Copyright © The Boeing Company. See title page for details.

ALERTING MESSAGE	CAUSE	CORRECTIVE ACTION
RTA UPLINK READY	An FMC RTA uplink message is has been received and is available for loading on the RTA PROGRESS page.	Select RTA PROGRESS page, LOAD RTA data, and execute or ERASE.
TAKEOFF DATA LOADED	Uplink takeoff data matching Runway (RTE page) or runway/intersection (TAKEOFF REF page) has been loaded on the TAKEOFF REF page, and is ready for flight crew review.	Select TAKEOFF REF page, accept or reject takeoff data.
TAKEOFF DATA UPLINK	An FMC takeoff data uplink message containing one or more sets of runway takeoff data has been received and loaded in FMC memory.	Enter appropriate runway (RTE page) or runway/intersection (TAKEOFF REF page) to access runway takeoff data.

Copyright © The Boeing Company. See title page for details.

DO NOT USE FOR FLIGHT

FMC Data Link Advisory Messages

ADVISORY MESSAGE	CAUSE	CORRECTIVE ACTION
INVALID ALTN DEST UPLINK	An FMC alternate destinations uplink message was received, but was rejected due to errors.	Clear the message.
INVALID CRZ WIND UPLINK	An FMC cruise wind uplink message was received, but was rejected due to errors.	Clear the message.
INVALID FORECASTS UPLINK	An FMC descent forecasts uplink message was received, but was rejected due to errors.	Clear the message.
INVALID LIMITS UPLINK	An FMC performance limits uplink message was received, but was rejected due to errors.	Clear the message.
INVALID NAV DATA UPLINK	An FMC supplemental navigation data uplink message was received, but was rejected due to errors.	Clear the message.
INVALID PERF INIT UPLINK	An FMC performance initialization uplink message was received, but was rejected due to errors.	Clear the message.
INVALID ROUTE UPLINK	An FMC route uplink message was received, but was rejected due to errors.	Clear the message.
INVALID RTA UPLINK	An FMC RTA uplink message was received, but was rejected due to errors.	Clear the message.
INVALID TAKEOFF UPLINK	An FMC takeoff data uplink message was received, but was rejected due to errors.	Clear the message.

Copyright © The Boeing Company. See title page for details.

Controls and Indicators 12.10.1
Fuel Control Panel 12.10.1
Fuel Quantity Indications 12.10.3
Fuel Alert Indications 12.10.4
Fueling / Defueling / Measurement 12.10.7
Test Gages and Fueling Panel 12.10.9

System Description 12.20.1
Introduction 12.20.1
Fuel Feed 12.20.1
Fuel Pumps 12.20.1
Fuel Crossfeed 12.20.2
Fuel Shutoff Valves 12.20.2
Center Tank Fuel Scavenge Jet Pump 12.20.2
Fuel Temperature 12.20.2
APU Fuel Feed 12.20.2
Fuel Quantity Indication 12.20.3
Fueling/Defueling/Ground Transfer 12.20.3
Fuel Tank Location and Capacities (Usable Fuel) 12.20.3
Fuel Schematic 12.20.4

Copyright © The Boeing Company. See title page for details.

Intentionally
Blank

Copyright © The Boeing Company. See title page for details.

Fuel Control Panel

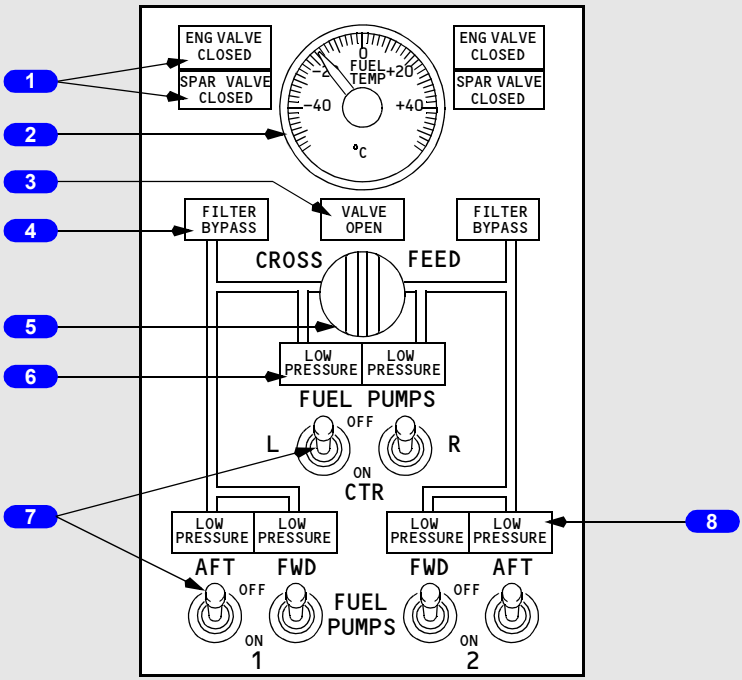

FORWARD OVERHEAD PANEL

1 Engine Valve Closed (ENG VALVE CLOSED) and SPAR VALVE CLOSED Lights

Extinguished – related engine or spar fuel shutoff valve is open.

Illuminated (blue) –

- bright – related engine or spar fuel shutoff valve is in transit, or valve position and engine start lever or engine fire warning switch disagree.
- dim – related engine or spar fuel shutoff valve is closed.

2 FUEL Temperature (TEMP) Indicator

Indicates fuel temperature in No. 1 tank.

Copyright © The Boeing Company. See title page for details.

3 Crossfeed VALVE OPEN Light

Extinguished – crossfeed valve is closed.

Illuminated (blue) –

- bright – crossfeed valve is in transit, or valve position and CROSSFEED selector disagree.
- dim – crossfeed valve is open.

4 FILTER BYPASS Lights

Extinguished – fuel filter operating normally.

Illuminated (amber) – impending fuel filter bypass due to a contaminated filter.

5 CROSSFEED Selector

Controls fuel crossfeed valve.

Closed – isolates engine No. 1 and No. 2 fuel feed lines.

Open – connects engine No. 1 and No. 2 fuel feed lines.

6 Center Tank FUEL PUMP LOW PRESSURE Lights

Illuminated (amber) – fuel pump output pressure is low and FUEL PUMP switch is ON.

Note: With both Center (CTR) tank FUEL PUMP switches ON, illumination of both LOW PRESSURE lights illuminate MASTER CAUTION and FUEL system annunciator lights. Illumination of one LOW PRESSURE light illuminates MASTER CAUTION and FUEL system annunciator lights on MASTER CAUTION light recall.

Note: With one CTR tank FUEL PUMP switch OFF, illumination of opposite CTR tank LOW PRESSURE light illuminates the MASTER CAUTION and FUEL system annunciator lights.

Extinguished – fuel pump output pressure is normal, or FUEL PUMP switch is OFF.

7 FUEL PUMP Switches

ON – activates fuel pump.
OFF – deactivates fuel pump.

Copyright © The Boeing Company. See title page for details.

8 Main Tank FUEL PUMP LOW PRESSURE Lights

Illuminated (amber) – fuel pump output pressure is low, or FUEL PUMP switch is OFF.

Note: Two LOW PRESSURE lights illuminated in same tank illuminate MASTER CAUTION and FUEL system annunciator lights. One LOW PRESSURE light causes MASTER CAUTION and FUEL system annunciator lights to illuminate on MASTER CAUTION light recall.

Extinguished – fuel pump output pressure is normal.

Fuel Quantity Indications

[Option - Side By Side display, lbs]

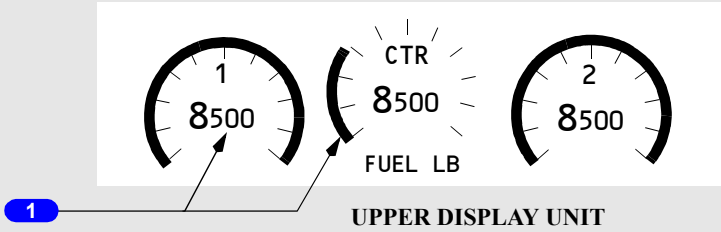

[Option - Over/Under display, kgs]

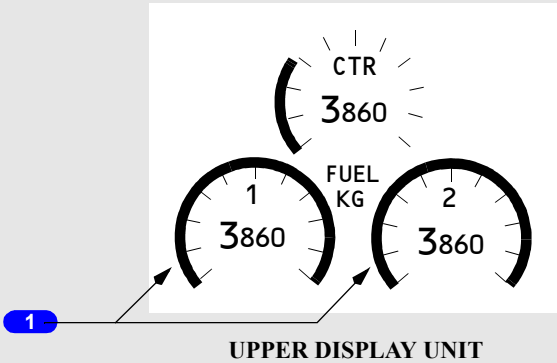

Copyright © The Boeing Company. See title page for details.

1 FUEL Quantity Indicators

Illuminated (white) – indicates usable fuel in related tank:

- accuracy is ± 2 1/2% of full scale reading

[Option - Fuel Quantity Densitometer.]

- accuracy is ±1% of full scale reading
- standby AC power is required.

Fuel Alert Indications

[Option - Side By Side display, lbs]

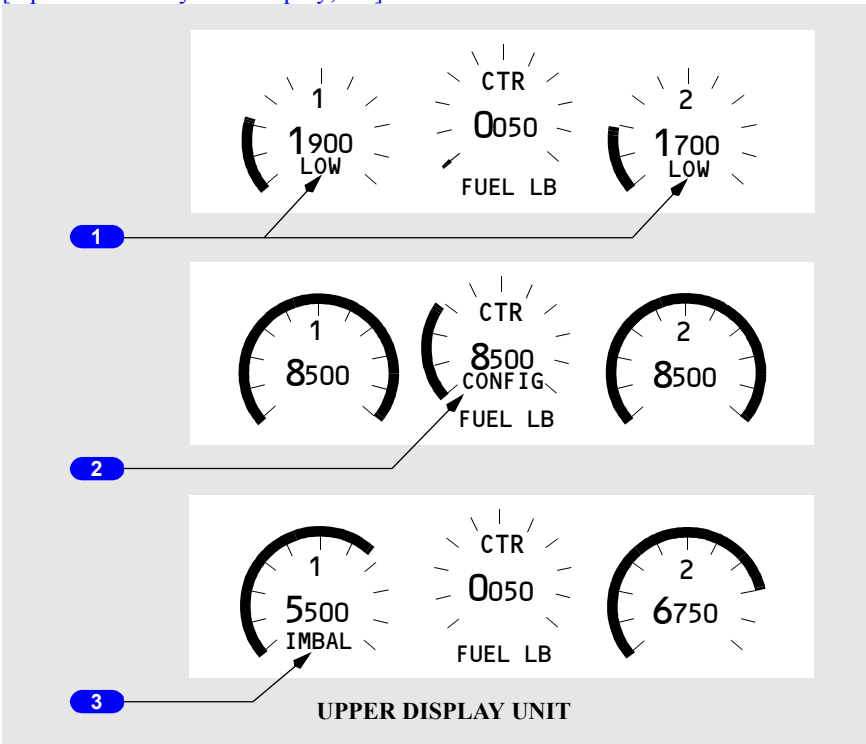

Copyright © The Boeing Company. See title page for details.

[Option - Over/Under display, kgs]

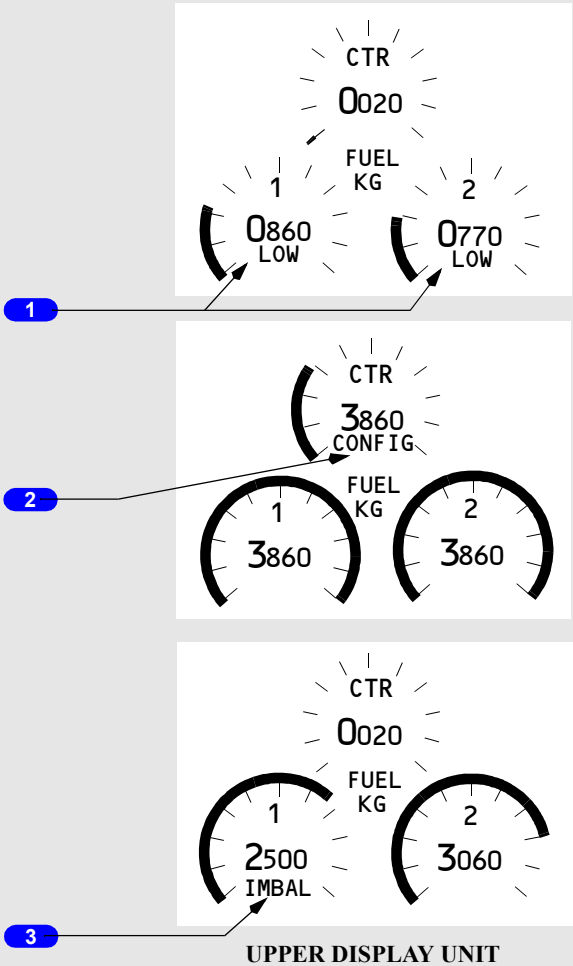

UPPER DISPLAY UNIT

1 Fuel LOW Indication

Illuminated (amber) – fuel quantity less than 2000 lbs/907 kg in related main tank:

- fuel quantity arc and digits on tank(s) with low fuel quantity turn amber
- displayed until quantity is increased to 2500 lbs/1134 kg.

Copyright © The Boeing Company. See title page for details.

2 Fuel Configuration (CONFIG) Indication

Illuminated (amber) – center tank quantity greater than 1600 lbs/726 kgs, both center tank pumps are producing low or no pressure and either engine is running:

- fuel quantity arc and digits on center tank turn amber
- when illuminated, the indications will remain amber until center tank quantity is less than 800lbs/363 kgs, one center tank pump is producing high pressure or both engines are not running.

3 Fuel Imbalance (IMBAL) Indication

Illuminated (amber) – main tanks differ by more than 1000lbs/453 kgs:

- displayed below main tank with lower fuel quantity
- fuel quantity arc and digits on tank with lower fuel quantity turn amber
- inhibited when airplane is on ground
- inhibited by fuel LOW indication when both indications exist
- displayed until imbalance is reduced to 200lbs/91 kgs.

Copyright © The Boeing Company. See title page for details.

Fueling / Defueling / Measurement

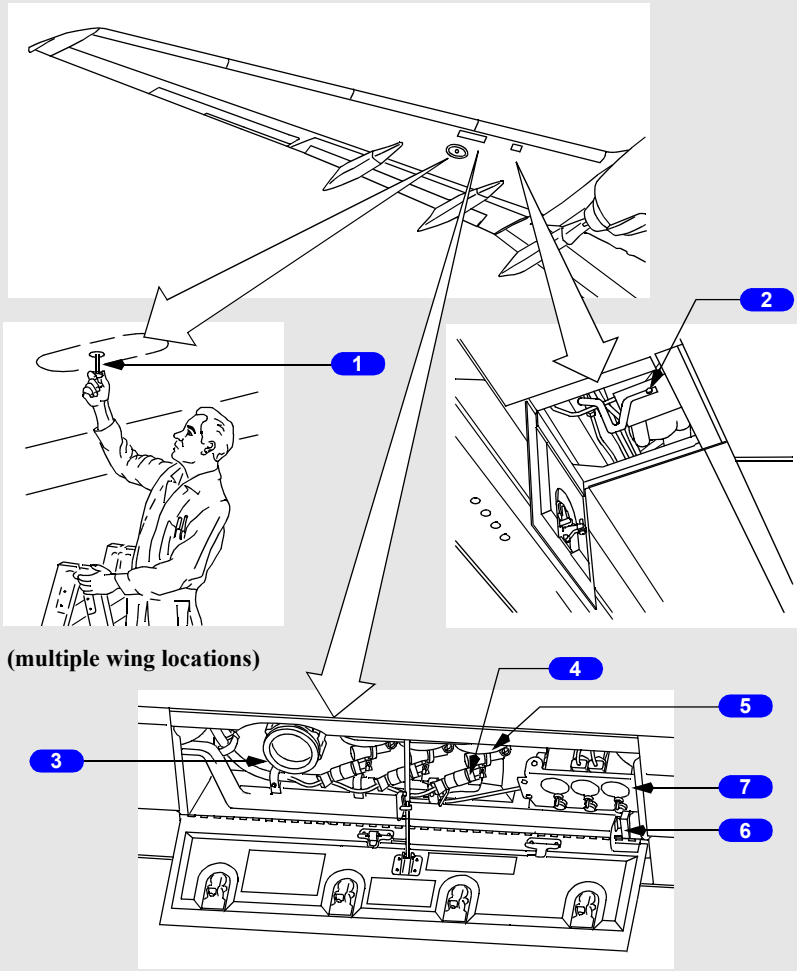

RIGHT WING LEADING EDGE

Copyright © The Boeing Company. See title page for details.

1 Fuel Measuring Stick

Allows comparison of fuel quantity or weight as determined from measuring stick reading and fuel weight indicated by fuel quantity indicators:

- six fuel measuring sticks are installed in each main tank and four are installed in center tank
- reading is obtained by withdrawing measuring stick from tank and latching it magnetically to an internal float. Fuel depth is read where stick passes through wing skin.

2 Manual Defueling Valve

Open – interconnects engine feed system and fueling station for:

- defueling
- ground transfer of fuel.

Closed – isolates engine feed system from fueling station.

3 Fueling Receptacle

Hose connection receptacle for single point fueling.

4 Solenoid Override

Mechanically opens solenoid operated valve. Fuel valve opens if fuel pressure is available.

5 Fueling Valves

With the battery switch ON, and the refueling door open, fuel pressure opens valve.

6 Refueling Power Control Relay

Door closed – proximity sensor deactivates power to fueling system.

Door open – the fueling system is powered and panel lights illuminate.

7 Test Gages & Fueling Panel

Copyright © The Boeing Company. See title page for details.

Test Gages and Fueling Panel

[Option - lbs]

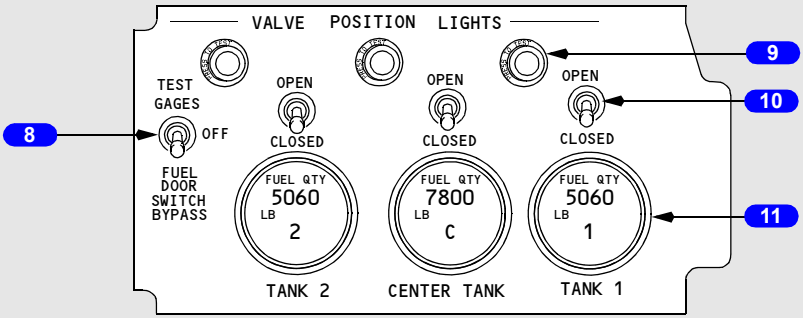

RIGHT WING LEADING EDGE

[Option - Fuel Quantity Selector, kg]

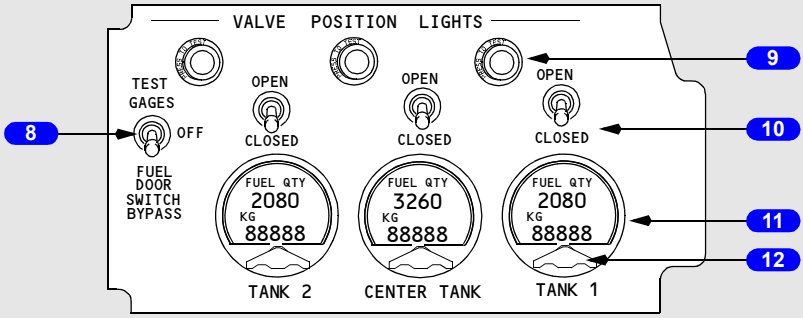

RIGHT WING LEADING EDGE

8 FUELING INDICATION TEST SWITCH

(spring–loaded to OFF position)

TEST GAGES – checks operation of fuel quantity indicators.

FUEL DOOR SWITCH BYPASS – energizes fueling panel if refueling power control relay fails.

9 Fueling VALVE POSITION LIGHTS

Extinguished –

- fueling valve switch is OPEN and related tank is full
- fueling valve switch is CLOSED.

Copyright © The Boeing Company. See title page for details.

Illuminated (blue) – fueling valve switch is OPEN and related tank is not full.

10 Fueling Valve Switches

OPEN – energizes fueling valve in related tank.

CLOSED – de–energizes fueling valve in related tank.

11 FUEL Quantity (QTY) Indicators

Indicates total usable fuel tank quantity in related tank.

12 Fuel Quantity Selectors
[Option]

Rotate – sets total fuel quantity desired in related tank.

Copyright © The Boeing Company. See title page for details.

Introduction

The fuel system supplies fuel to the engines and the APU. Fuel is contained in three tanks located within the wings and wing center section.

Refer to Chapter 7, Engines, APU, for a description of the engine and APU fuel systems.

Fuel Feed

Both engines are normally pressure fed from the center tank until the center tank quantity decreases to near zero. The engines are normally then pressure fed from their respective main tanks. Check valves are located throughout the fuel system to ensure the proper direction of fuel flow and to prevent transfer of fuel between tanks.

Fuel Pumps

Each fuel tank uses two AC powered fuel pumps which are cooled and lubricated by fuel passing through the pump. Center tank pumps produce higher pressure than main tank pumps. This ensures that center tank fuel is used before main tank fuel, even though all fuel pumps are operating. Individual pressure sensors monitor the output pressure of each pump.

Note: Fuel pump LOW PRESSURE lights may flicker when tank quantity is low and the airplane is in a climb, descent, or on the ground with a nose-down attitude.

Suction Feed

When main tank fuel pump pressure is low, each engine can draw fuel from its corresponding main tank through a suction feed line that bypasses the pumps. As the airplane climbs, dissolved air is released from the fuel in the tank due to the decrease in air pressure. This air may collect in the suction feed line and restrict fuel flow. At high altitude, thrust deterioration or engine flameout may occur as a result of the fuel flow reduction.

Fuel pressure can be provided from a main tank with operating fuel pumps to both engines by opening the fuel crossfeed valve. Continued crossfeed use will result in a progressive fuel imbalance.

The dissolved air in the fuel tank will eventually deplete after reaching cruise altitude. The depletion time is dependent upon airplane altitude, fuel temperature, and type of fuel. Once the dissolved air is depleted, the engine may be capable of suction feed operation at cruise power.

Copyright © The Boeing Company. See title page for details.

The main tank bypass valves may also be used for suction defueling.

Fuel Crossfeed

The engine fuel manifolds are interconnected by use of the crossfeed valve. The valve is DC motor operated from the battery bus. The valve provides the means of directing fuel to both engines from any tank.

Fuel Shutoff Valves

Spar fuel shutoff valves are located at the engine–mounting wing stations. The valves are DC motor operated from the hot battery bus. The engine fuel shutoff valves are fuel actuated, solenoid controlled valves powered from the battery bus. Both the spar fuel shutoff valve and the engine fuel shutoff valve close whenever their respective engine fire warning switch is pulled or engine start lever is placed to CUTOFF.

Center Tank Fuel Scavenge Jet Pump

The center tank fuel scavenge jet pump begins to operate when the main tank No. 1 is about one-half full and the main tank No. 1 forward pump is operating. The center tank scavenge jet pump transfers remaining fuel from the center tank to main tank No. 1 at a rate of approximately 177 lb/hr (80 kg/hr), depending upon altitude. Once the fuel scavenging process starts, it continues for the remainder of the flight.

Fuel Temperature

The FUEL TEMP indicator located on the fuel control panel displays fuel temperature. A sensor in main tank No. 1 allows monitoring of fuel temperature. The temperature indicating system uses AC electrical power.

APU Fuel Feed

When AC fuel pumps are operating, fuel for the APU is supplied from the left side of the fuel manifold. If the AC fuel pumps are not operating, fuel is suction fed from main tank No. 1.

[Option - APU DC Fuel Pump]
A DC operated APU fuel boost pump is installed to ensure positive fuel pressure to the APU fuel control unit. During APU start and operation, the pump operates automatically when the APU fuel control unit senses low fuel pressure. The pump shuts off automatically when an AC fuel pump pressurizes the fuel manifold.

Copyright © The Boeing Company. See title page for details.

Fuel Quantity Indication

The fuel quantity indication system calculates the usable fuel quantity in each tank. The fuel quantity in each tank is displayed in digital and analog format on the upper display unit and digitally on the fueling station panel.

[Option - Fuel Densitometer]
The system provides a correction for variance in fuel density.

Fueling/Defueling/Ground Transfer

Rapid fueling and defueling is accomplished at the single–point pressure fueling station in the right wing. The fueling station is also used for the ground transfer of fuel between tanks.

The manual defueling valve, located outboard of engine No. 2, interconnects the engine feed system and the fueling station. It is opened for defueling and tank to tank transfer operations.

A shutoff system is used during fueling to automatically close the fueling valve in each fuel tank when the tank is full.

Fuel Tank Location and Capacities (Usable Fuel)

Main tanks No. 1 and No. 2 are integral with the wing structure. The center tank lies between the wing roots within the fuselage area and extends out into the wing structure.

These figures represent approximate amounts of usable fuel. The appropriate weight and balance control and loading manual gives exact figures for all conditions.

TANK	GALLONS	POUNDS*	LITERS	KILOGRAMS*
NO. 1	1,288	8,630	4,876	3,915
NO. 2	1,288	8,630	4,876	3,915
CENTER	4,299	28,803	16,273	13,066
TOTAL	6,875	46,063	26,025	20,896

*Usable fuel at level attitude, fuel density = 6.7 pounds per U.S. Gallon/0.8029 kilograms per liter.

Copyright © The Boeing Company. See title page for details.

DO NOT USE FOR FLIGHT

Fuel Schematic

[Option - APU DC Fuel Pump]

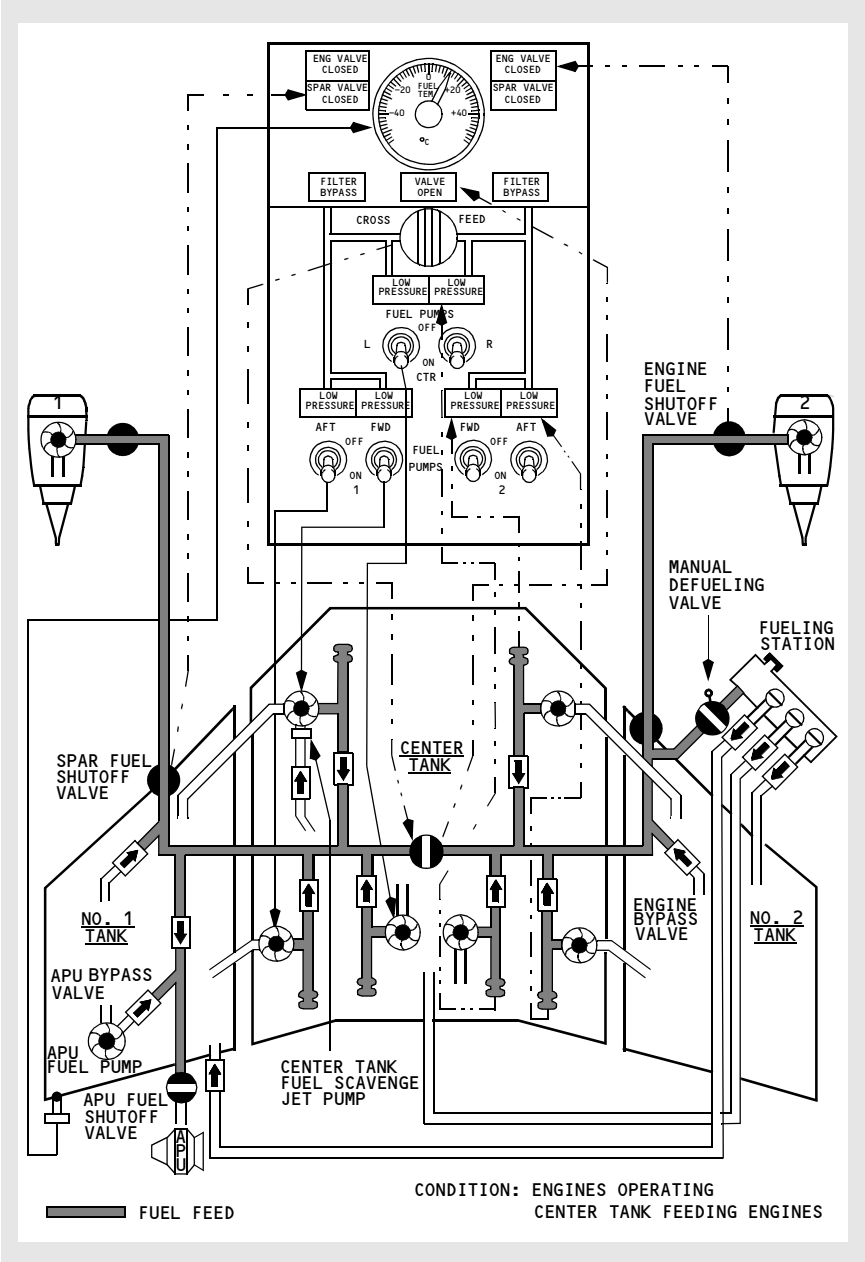

Copyright © The Boeing Company. See title page for details.

DO NOT USE FOR FLIGHT

Controls and Indicators 13.10.1

Hydraulic Panel. 13.10.1

Hydraulic Indications 13.10.2

Flight Control Panel 13.10.4

System Description 13.20.1

Introduction. 13.20.1

Hydraulic Power Distribution Schematic 13.20.1

A and B Hydraulic Systems 13.20.2

A and B Hydraulic System Pumps 13.20.2

System A Hydraulic Leak 13.20.3

System B Hydraulic Leak 13.20.3

Power Transfer Unit. 13.20.4

Landing Gear Transfer Unit. 13.20.4

Standby Hydraulic System 13.20.4

Automatic Operation 13.20.5

Standby Hydraulic System Schematic. 13.20.6

Standby Hydraulic System Leak 13.20.8

Variations in Hydraulic Quantity Indications 13.20.8

Copyright © The Boeing Company. See title page for details.

Intentionally
Blank

Copyright © The Boeing Company. See title page for details.

Hydraulic Panel

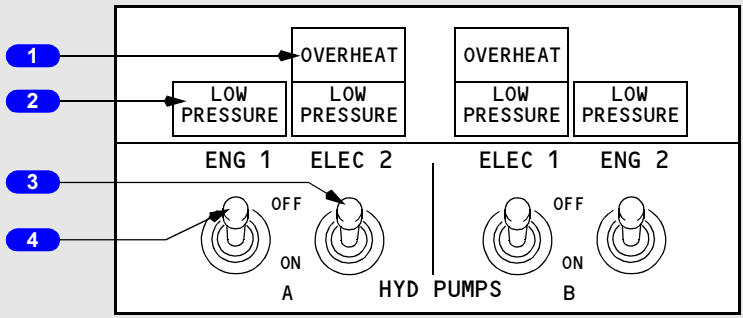

FORWARD OVERHEAD PANEL

1 Electric Hydraulic Pump OVERHEAT Lights

Illuminated (amber) – Hydraulic fluid used to cool and lubricate the corresponding electric motor driven pump has overheated or the pump itself has overheated.

2 Hydraulic Pump LOW PRESSURE Lights

Illuminated (amber) – output pressure of associated pump is low.

Note: When an engine fire warning switch is pulled, the low pressure light is deactivated.

3 ELECTRIC HYDRAULIC PUMPS Switches

ON – provides power to associated electric motor–driven pump.

OFF – electrical power removed from pump.

4 ENGINE HYDRAULIC PUMPS Switches

ON – de–energizes blocking valve in pump to allow pump pressure to enter system.

Note: Should remain ON at shutdown to prolong solenoid life.

OFF – energizes blocking valve to block pump output.

Copyright © The Boeing Company. See title page for details.

Hydraulic Indications

[Option - Side by Side display]

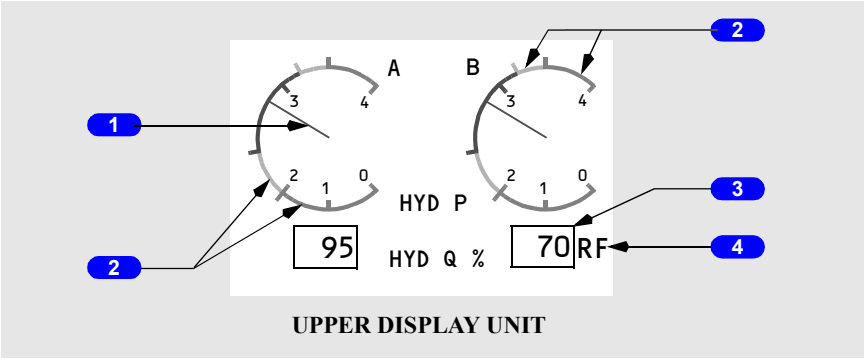

UPPER DISPLAY UNIT

1 HYDRAULIC System PRESSURE Indications

Indicates system pressure:

- displayed (white) - normal operating range
- displayed (amber) - caution range
- displayed (red) - operating limit reached.

Note: When both pumps for a system are OFF, respective pointer reads zero.

2 Hydraulic Pressure Amber Bands/Redlines

Displayed (amber) - low/high hydraulic pressure caution range.

Displayed (red) - low/high hydraulic pressure operating limit.

3 HYDRAULIC System QUANTITY Indications

Indicates digital percentage (0% to 106%) of hydraulic quantity.

Note: Quantity also displayed at each reservoir.

4 REFILL Indication (RF) (white)

Illuminated (white) – hydraulic quantity below 76%.

Note: Valid only when airplane is on ground with both engines shutdown or after landing with flaps up during taxi–in.

Copyright © The Boeing Company. See title page for details.

[Option - Over/Under display]

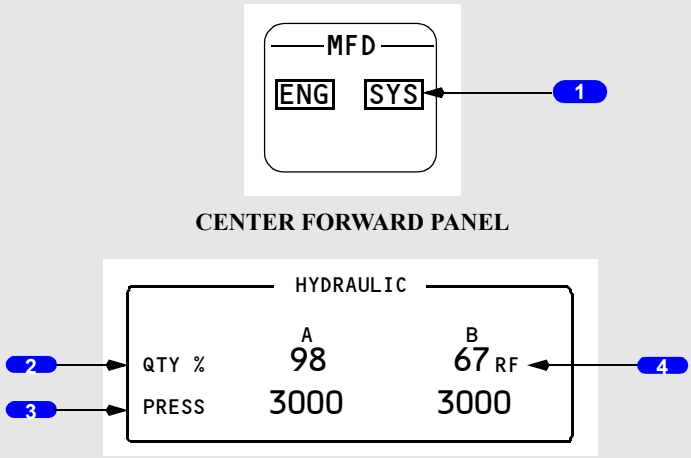

1 MFD System (SYS) Switch

Push – SYS

- displays hydraulic indications on lower DU; or if the lower DU is unavailable, displays it on upper DU or inboard DU based on the position of the display select panel selector
- second push blanks lower DU.

2 HYDRAULIC System QUANTITY Indications (white)

Indicates digital percentage (0% to 106%) of hydraulic quantity.

Note: Quantity also displayed at each reservoir.

3 HYDRAULIC System PRESSURE Indications (white)

Indicates system pressure:

- Normal pressure – 3000 psi
- Maximum pressure – 3500 psi.

Note: When both pumps for a system are OFF, the indication reads zero.

4 REFILL Indication (RF) (white)

Illuminated (white) – hydraulic quantity below 76%.

Note: Valid only when airplane is on ground with both engines shutdown or after landing with flaps up during taxi–in.

Copyright © The Boeing Company. See title page for details.

Flight Control Panel

[737 modified rudder - not installed]

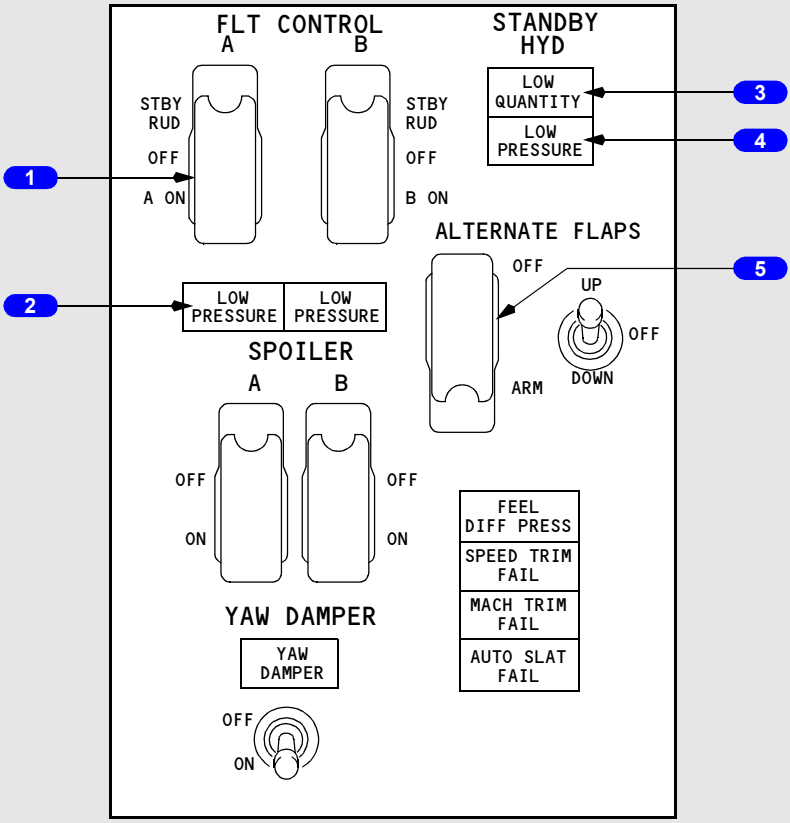

FORWARD OVERHEAD PANEL

Copyright © The Boeing Company. See title page for details.

[737 modified rudder - installed]

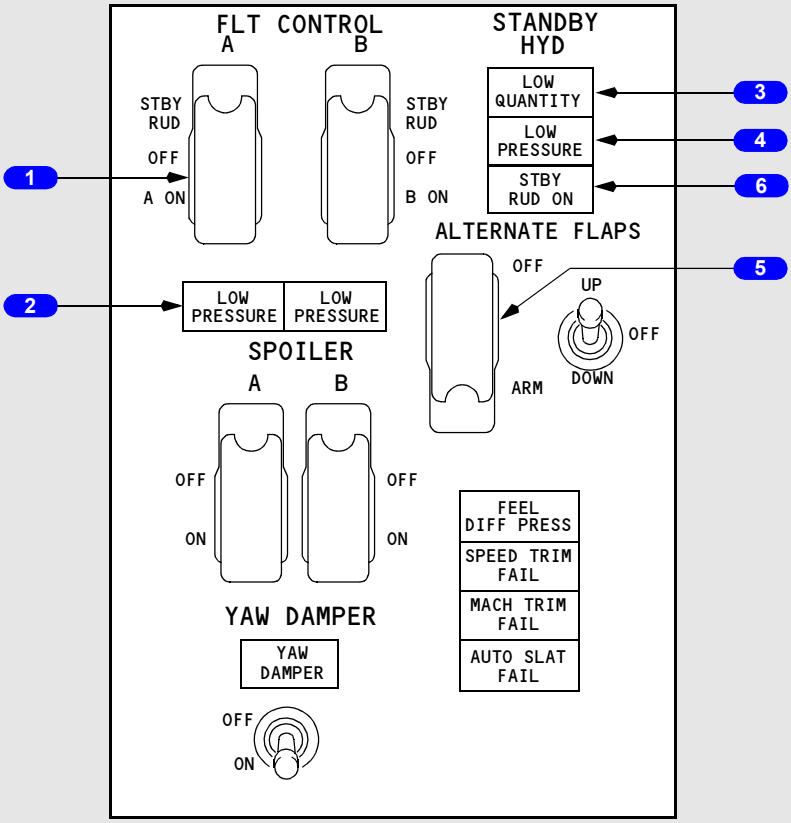

FORWARD OVERHEAD PANEL

1 FLIGHT CONTROL Switches

STBY RUD – activates standby pump and opens standby rudder shutoff valve to pressurize standby rudder power control unit.

OFF – closes flight control shutoff valve isolating ailerons, elevators and rudder from associated hydraulic system pressure.

ON (guarded position) – normal operating position.

Copyright © The Boeing Company. See title page for details.

2 Flight Control LOW PRESSURE Lights

Illuminated (amber) –

- indicates low hydraulic system (A or B) pressure to ailerons, elevator and rudder
- deactivated when associated FLIGHT CONTROL switch is positioned to STBY RUD and standby rudder shutoff valve opens.

3 STANDBY HYDRAULIC LOW QUANTITY Light

Illuminated (amber) –

- indicates low quantity in standby hydraulic reservoir
- always armed.

4 STANDBY HYDRAULIC LOW PRESSURE Light

Illuminated (amber) –

- indicates output pressure of standby pump is low
- armed only when standby pump operation has been selected or automatic standby function is activated.

5 ALTERNATE FLAPS Master Switch

OFF (guarded position) – normal operating position.

ARM – closes trailing edge flap bypass valve, activates standby pump, and arms ALTERNATE FLAPS position switch.

6 STBY RUD ON Light

[737 modified rudder - installed]

Illuminated (amber) - indicates the standby rudder PCU is pressurized.

Copyright © The Boeing Company. See title page for details.

DO NOT USE FOR FLIGHT

Introduction

The airplane has three hydraulic systems: A, B and standby. The standby system is used if system A and/or B pressure is lost. The hydraulic systems power the following airplane systems:

- flight controls
- leading edge flaps and slats
- trailing edge flaps
- landing gear
- wheel brakes
- nose wheel steering
- thrust reversers
- autopilots.

Either A or B hydraulic system can power all flight controls with no decrease in airplane controllability.

Each hydraulic system has a fluid reservoir located in the main wheel well area. System A and B reservoirs are pressurized by bleed air. The standby system reservoir is connected to the system B reservoir for pressurization and servicing. Pressurization of all reservoirs ensures positive fluid flow to all hydraulic pumps.

Hydraulic Power Distribution Schematic

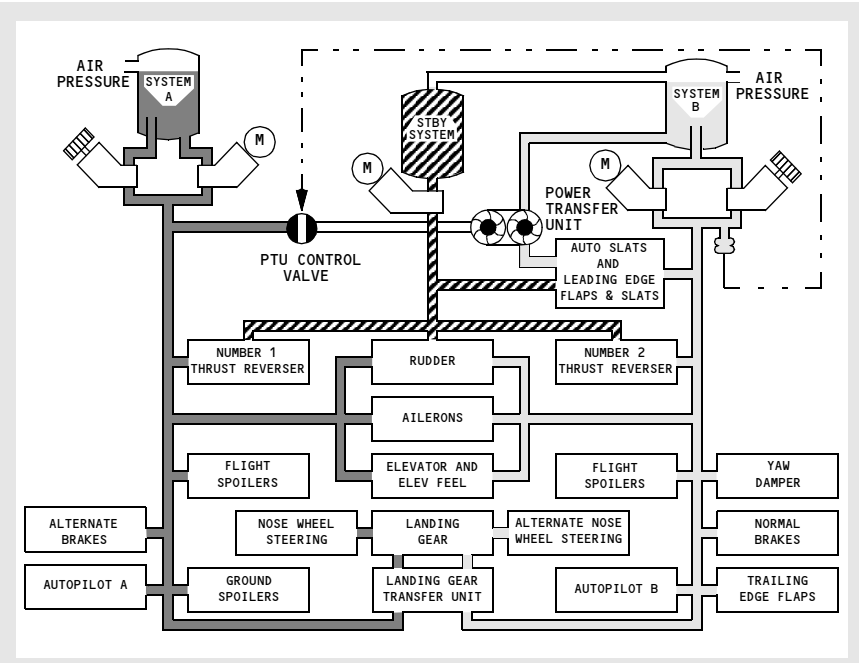

Copyright © The Boeing Company. See title page for details.

A and B Hydraulic Systems

Components powered by hydraulic systems A and B are:

System A

- ailerons
- rudder
- elevator and elevator feel
- flight spoilers
  (two on each wing)
- ground spoilers
- alternate brakes
- No. 1 thrust reverser
- autopilot A
- normal nose wheel steering
- landing gear
- power transfer unit (PTU)

System B

- ailerons
- rudder
- elevator and elevator feel
- flight spoilers
  (two on each wing)
- leading edge flaps and slats
- normal brakes
- No. 2 thrust reverser
- autopilot B
- alternate nose wheel steering
- landing gear transfer unit.
- autoslats
- yaw damper
- trailing edge flaps.

A and B Hydraulic System Pumps

Both A and B hydraulic systems have an engine–driven pump and an AC electric motor–driven pump. The system A engine–driven pump is powered by the No. 1 engine and the system B engine–driven pump is powered by the No. 2 engine. An engine–driven hydraulic pump supplies approximately 4 times the fluid volume of the related electric motor–driven hydraulic pump.

The ENG 1 (system A) or ENG 2 (system B) pump ON/OFF switch controls the engine–driven pump output pressure. Positioning the switch to OFF isolates fluid flow from the system components. However, the engine–driven pump continues to rotate as long as the engine is operating. Pulling the engine fire warning switch shuts off the fluid flow to the engine–driven pump and deactivates the related LOW PRESSURE light.

[Option - Abex electric motor driven hydraulic pumps]
The ELEC 2 (system A) or ELEC 1 (system B) pump ON/OFF switch controls the related electric motor–driven pump. If an overheat is detected in either system, the related OVERHEAT light illuminates.

Copyright © The Boeing Company. See title page for details.

[Option - Vickers electric motor driven hydraulic pumps]
The ELEC 2 (system A) or ELEC 1 (system B) pump ON/OFF switch controls the related electric motor–driven pump. If an overheat is detected in either system, the related OVERHEAT light illuminates, power is removed from the pump and the LOW PRESSURE light illuminates.

Note: Loss of the system A engine-driven hydraulic pump, and a heavy demand on system A, may result in an intermittent LOW PRESSURE light for the remaining electric motor-driven hydraulic pump. The system A flight controls LOW PRESSURE light, Master Caution light, and the FLT CONT and HYD system annunciator lights also illuminate.

Hydraulic fluid used for cooling and lubrication of the pumps passes through a heat exchanger before returning to the reservoir. The heat exchanger for system A is located in main fuel tank No. 1 and for system B is in main fuel tank No. 2.

CAUTION: Minimum fuel for ground operation of electric motor-driven pumps is 760 kgs/1675 lbs in the related main tank.

Pressure switches, located in the engine–driven and electric motor–driven pump output lines, send signals to illuminate the related LOW PRESSURE light if pump output pressure is low. A check valve, located in each output line, isolates the related pump from the system. The related system pressure transmitter sends the combined pressure of the engine–driven and electric motor–driven pump to the related hydraulic system pressure indication.

System A Hydraulic Leak

If a leak develops in the engine–driven pump or its related lines, a standpipe in the reservoir prevents a total system fluid loss. With fluid level at the top of the standpipe, the reservoir quantity displayed indicates approximately 20% full. System A hydraulic pressure is maintained by the electric motor–driven pump.

If a leak develops in the electric motor–driven pump or its related lines, or components common to both the engine and electric motor–driven pumps, the quantity in the reservoir steadily decreases to zero and all system pressure is lost.

System B Hydraulic Leak

If a leak develops in either pump, line or component of system B, the quantity decreases until it indicates approximately zero and system B pressure is lost. The system B reservoir has one standpipe which supplies fluid to both the engine–driven pump and the electric motor–driven pump. However, with fluid level at the top of the standpipe, fluid remaining in the system B reservoir is sufficient for power transfer unit operation.

A leak in system B does not affect the operation of the standby hydraulic system.

Copyright © The Boeing Company. See title page for details.

DO NOT USE FOR FLIGHT

Power Transfer Unit

The purpose of the PTU is to supply the additional volume of hydraulic fluid needed to operate the autoslats and leading edge flaps and slats at the normal rate when system B engine–driven hydraulic pump volume is lost. The PTU uses system A pressure to power a hydraulic motor–driven pump, which pressurizes system B hydraulic fluid. The PTU operates automatically when all of the following conditions exist:

- system B engine–driven pump hydraulic pressure drops below limits
- airborne
- flaps are less than 15 but not up.

Landing Gear Transfer Unit

The purpose of the landing gear transfer unit is to supply the volume of hydraulic fluid needed to raise the landing gear at the normal rate when system A engine–driven pump volume is lost. The system B engine–driven pump supplies the volume of hydraulic fluid needed to operate the landing gear transfer unit when all of the following conditions exist:

- airborne
- No. 1 engine RPM drops below a limit value
- landing gear lever is positioned UP
- either main landing gear is not up and locked.

Standby Hydraulic System

The standby hydraulic system is provided as a backup if system A and/or B pressure is lost. The standby system can be activated manually or automatically and uses a single electric motor–driven pump to power:

- thrust reversers
- rudder
- leading edge flaps and slats (extend only)
- standby yaw damper.

Manual Operation

Positioning either FLT CONTROL switch to STBY RUD:

- activates the standby electric motor–driven pump
- shuts off the related hydraulic system pressure to ailerons, elevators and rudder by closing the flight control shutoff valve
- opens the standby rudder shutoff valve
- deactivates the related flight control LOW PRESSURE light when the standby rudder shutoff valve opens
- allows the standby system to power the rudder and thrust reversers.

Copyright © The Boeing Company. See title page for details.

[737 modified rudder- installed]
- illuminates the STBY RUD ON, Master Caution, and Flight Controls (FLT CONT) lights.

Positioning the ALTERNATE FLAPS master switch to ARM, (refer to Chapter 9, Flight Controls for a more complete explanation):
- activates the standby electric motor–driven pump
- closes the trailing edge flap bypass valve
- arms the ALTERNATE FLAPS position switch
- allows the standby system to power the leading edge flaps and slats and thrust reversers.

Automatic Operation

Automatic operation is initiated when all of the following conditions exist:
- loss of system A or B
- flaps extended
- airborne, or wheel speed greater than 60 kts

[737 modified rudder- installed]
- FLT CONTROL switch A or B Hydraulic System ON.

[737 modified rudder- installed]
If the main PCU Force Fight Monitor (FFM) trips, automatic operation of the Standby Hydraulic system is initiated.

Automatic operation:
- activates the standby electric motor–driven pump
- opens the standby rudder shutoff valve
- allows the standby system to power the rudder and thrust reversers.

[737 modified rudder- installed]
- illuminates the STBY RUD ON, Master Caution, and Flight Controls (FLT CONT) lights.

Copyright © The Boeing Company. See title page for details.

DO NOT USE FOR FLIGHT

Standby Hydraulic System Schematic

[737 modified rudder - not installed]

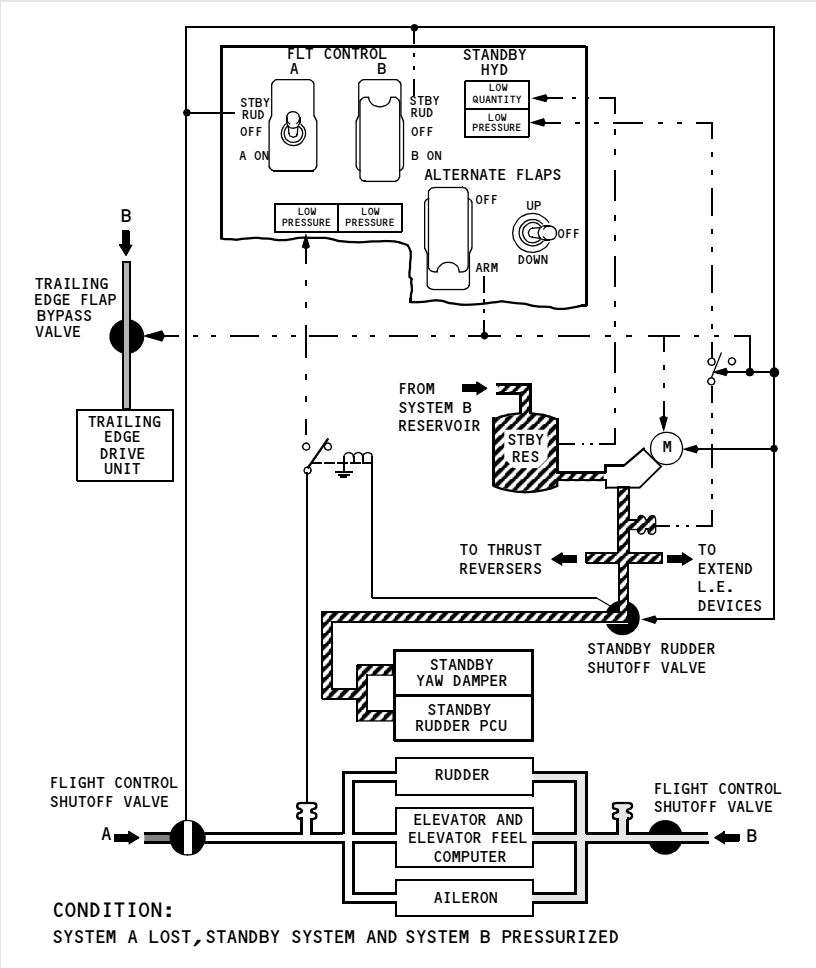

Copyright © The Boeing Company. See title page for details.

[737 modified rudder - installed]

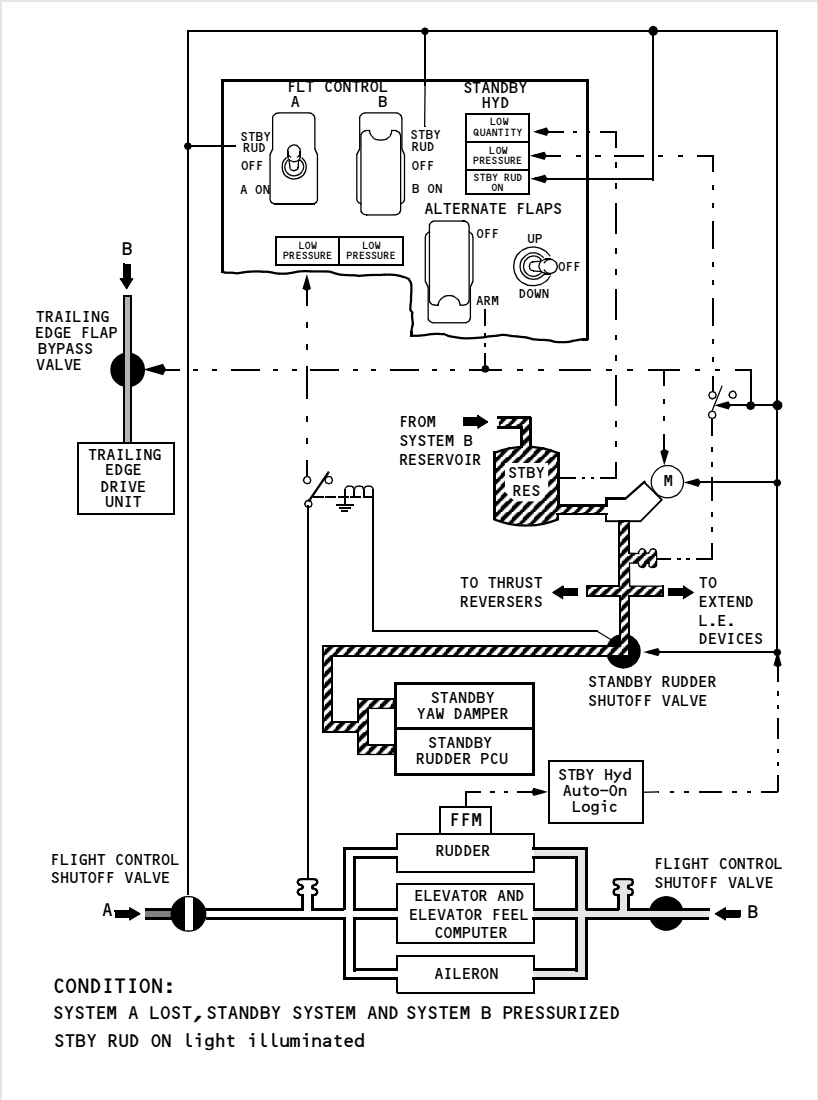

Copyright © The Boeing Company. See title page for details.

Standby Hydraulic System Leak

If a leak occurs in the standby system, the standby reservoir quantity decreases to zero. The LOW QUANTITY light illuminates when the standby reservoir is approximately half empty. System B continues to operate normally, however, the system B reservoir fluid level indication decreases and stabilizes at approximately 72% full.

Variations in Hydraulic Quantity Indications

During normal operations, variations in hydraulic quantity indications occur when:

- the system becomes pressurized after engine start
- raising or lowering the landing gear or leading edge devices
- cold soaking occurs during long periods of cruise.

These variations have little effect on systems operation.

If the hydraulic system is not properly pressurized, foaming can occur at higher altitudes. Foaming can be recognized by pressure fluctuations and the blinking of the related LOW PRESSURE lights. The MASTER CAUTION and HYD annunciator lights may also illuminate momentarily.

Copyright © The Boeing Company. See title page for details.

DO NOT USE FOR FLIGHT

Controls and Indicators 14.10.1

Landing Gear Panel. 14.10.1
Landing Gear Indicator Lights 14.10.2
Manual Gear Extension. 14.10.3
Autobrake and Antiskid Controls 14.10.4
Parking Brake 14.10.5
Hydraulic Brake Pressure Indicator 14.10.6
Brake Temperature Indicator 14.10.6
Rudder/Brake Pedals. 14.10.7
Nose Wheel Steering Switch. 14.10.8
Nose Wheel Steering Wheel 14.10.8

System Description 14.20.1

Introduction. 14.20.1
Landing Gear Operation 14.20.1
Landing Gear Retraction 14.20.1
Landing Gear Extension 14.20.2
Landing Gear Manual Extension. 14.20.2
Nose Wheel Steering. 14.20.3
Brake System 14.20.3
Normal Brake System 14.20.3
Alternate Brake System 14.20.3
Brake Accumulator 14.20.3
Antiskid Protection 14.20.4
Autobrake System 14.20.4
Parking Brake 14.20.5
Air/Ground System 14.20.7
Air/Ground System Logic Table 14.20.7

Copyright © The Boeing Company. See title page for details.

Intentionally
Blank

Copyright © The Boeing Company. See title page for details.

Landing Gear Panel

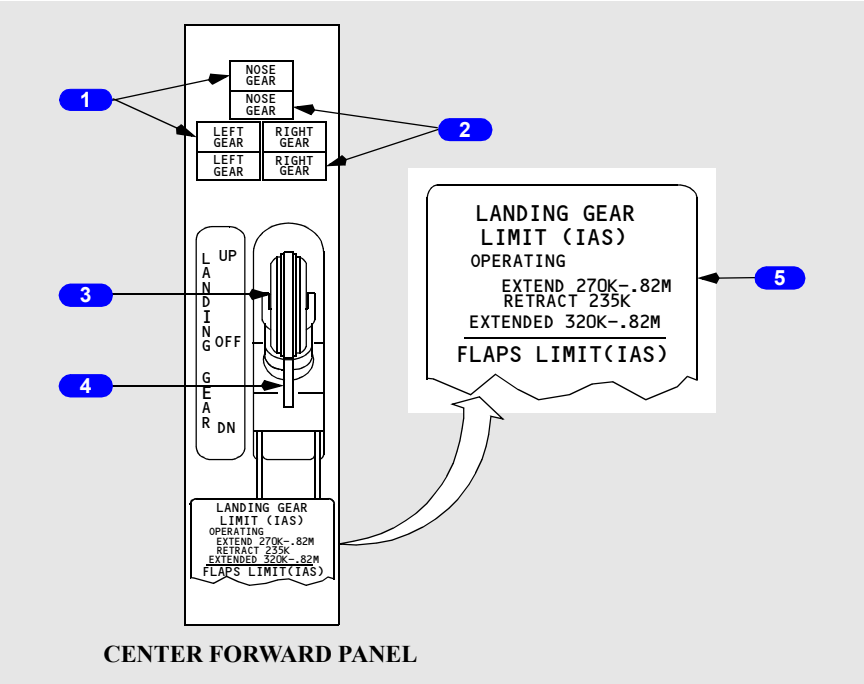

CENTER FORWARD PANEL

1 Landing Gear Indicator Lights (top)

Illuminated (red) –

- landing gear is not down and locked (with either or both forward thrust levers retarded to idle, and below 800 feet AGL).
- related landing gear is in disagreement with LANDING GEAR lever position (in transit or unsafe).

Extinguished -

- landing gear is up and locked with landing gear lever UP or OFF
- landing gear is down and locked with landing gear lever DN.

Copyright © The Boeing Company. See title page for details.

DO NOT USE FOR FLIGHT

2 Landing Gear Indicator Lights (bottom)

Illuminated (green) – related gear down and locked.

Note: Landing gear warning horn is deactivated with all gear down and locked.

Note: Landing gear is down and locked as long as one green landing gear indicator light (center panel or overhead panel) for each gear is illuminated.

Extinguished – landing gear is not down and locked.

3 LANDING GEAR Lever

UP – landing gear retract.

OFF – hydraulic pressure is removed from landing gear system.

DN – landing gear extend.

4 Override Trigger

Allows LANDING GEAR lever to be raised, bypassing the landing gear lever lock.

5 LANDING GEAR LIMIT Speed Placard

Indicates maximum speed while operating landing gear and after gear extension.

Landing Gear Indicator Lights

This is a redundant but separate set of landing gear indicator circuits and lights.

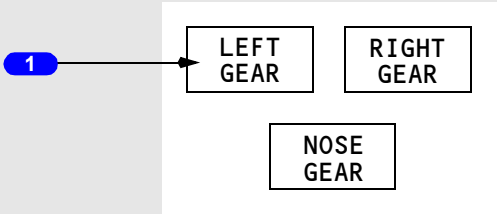

AFT OVERHEAD PANEL

Copyright © The Boeing Company. See title page for details.

1 Landing Gear Indicator Lights (overhead)

Illuminated (green) – related gear down and locked.

Note: Landing gear warning horn is deactivated with all gear down and locked.

Note: Landing gear is down and locked as long as one green landing gear indicator light (center panel or overhead panel) for each gear is illuminated.

Extinguished – landing gear is not down and locked.

Manual Gear Extension

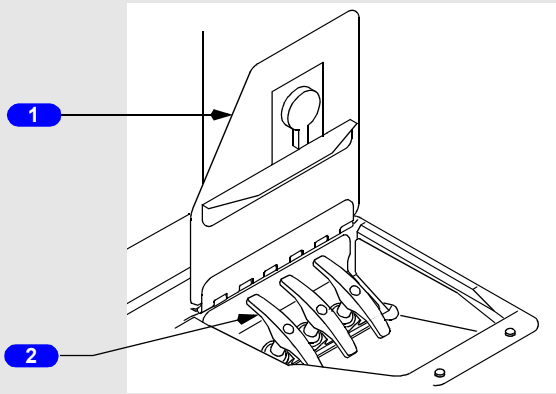

FLIGHT DECK FLOOR

1 Manual Extension Access Door

Open –

- manual landing gear extension is possible with landing gear lever in any position
- normal landing gear extension is still possible if hydraulic system A pressure is available
- landing gear retraction is disabled.

Closed – landing gear operate normally.

2 Manual Gear Extension Handles

Right main, nose, left main – Each landing gear uplock is released when related handle is pulled to its limit, approximately 24 inches (61 cm).

Copyright © The Boeing Company. See title page for details.

Autobrake and Antiskid Controls

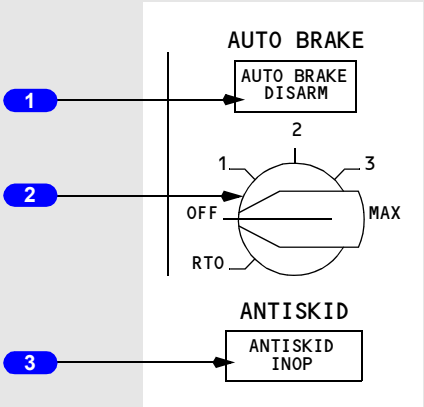

CENTER FORWARD PANEL

1 AUTO BRAKE DISARM Light

Illuminated (amber) –

- SPEED BRAKE lever moved to down detent during RTO or landing
- manual brakes applied during RTO or landing
- thrust lever(s) advanced during RTO or landing
  - except during first 3 seconds after touchdown for landing
- landing made with RTO selected
- RTO mode selected on ground
  - illuminates for one to two seconds then extinguishes
- a malfunction exists in automatic braking system.

Extinguished –

- AUTO BRAKE select switch set to OFF
- autobrakes armed.

2 AUTO BRAKE Select Switch

OFF – autobrake system deactivated.

1, 2, 3, or MAX –

- selects desired deceleration rate for landing
- switch must be pulled out to select MAX deceleration.

RTO – automatically applies maximum brake pressure when thrust levers are retarded to idle at or above 90 knots.

Copyright © The Boeing Company. See title page for details.

3 Antiskid Inoperative (ANTISKID INOP) Light

Illuminated (amber) – a system fault is detected by antiskid monitoring system.

Extinguished – antiskid system operating normally.

Parking Brake

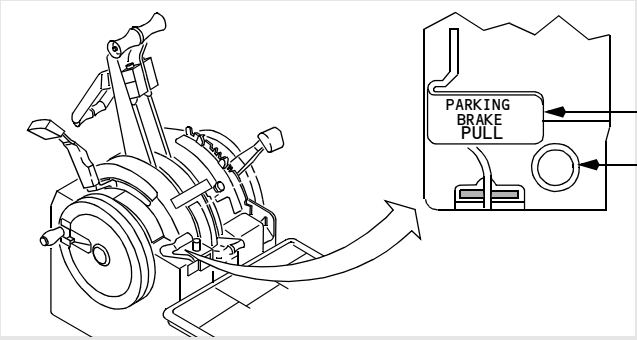

CONTROL STAND

1 PARKING BRAKE Lever

Forward – parking brakes released.

Aft – sets parking brakes when either Captain's or First Officer's brake pedals are fully depressed.

2 Parking Brake Warning Light

Illuminated (red) – parking brake is set (light operates from battery power).

Extinguished – parking brake is released.

Copyright © The Boeing Company. See title page for details.

licator

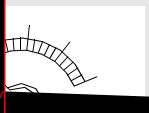

ure (BRAKE TEMP) Light

r) -

e of one or more brakes is excessive

shes when a hot brake condition is no longer indicated on the
y unit.

Copyright © The Boeing Company. See title page for details.

DO NOT USE FOR FLIGHT

2 RUDDER PEDAL ADJUSTMENT Crank

AFT (counter–clockwise) – adjusts rudder pedals aft.

FWD (clockwise) – adjusts rudder pedals forward.

Nose Wheel Steering Switch

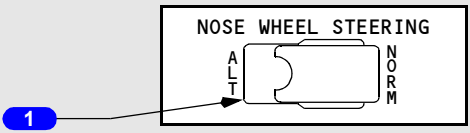

LEFT FORWARD PANEL

1 NOSE WHEEL STEERING Switch

ALT – hydraulic system B provides power for nose wheel steering.

NORM (guarded position) – hydraulic system A provides power for nose wheel steering.

Nose Wheel Steering Wheel

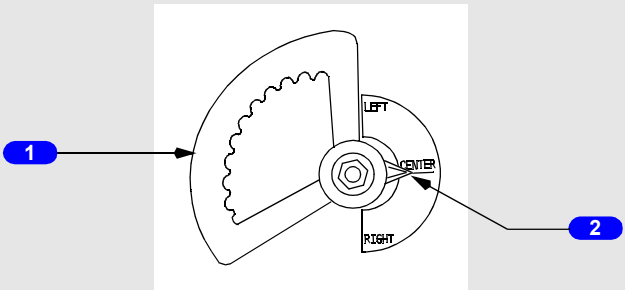

CAPTAIN SIDE PANEL

1 Nose Wheel Steering Wheel

Rotate –

- turns nose wheel up to 78 degrees in either direction
- overrides rudder pedal steering.

2 Nose Wheel Steering Indicator

LEFT – indicates nose wheel steering displacement left of center position.

CENTER – normal straight ahead position.

RIGHT – indicates nose wheel steering displacement right of center position.

Copyright © The Boeing Company. See title page for details.

Introduction

The airplane has two main landing gear and a single nose gear. Each main gear is a conventional two–wheel landing gear unit. The nose gear is a conventional steerable two–wheel unit.

Hydraulic power for retraction, extension, and nose wheel steering is normally supplied by hydraulic system A. A manual landing gear extension system and an alternate source of hydraulic power for nose wheel steering are also provided.

The normal brake system is powered by hydraulic system B. The alternate brake system is powered by hydraulic system A. Antiskid protection is provided on both brake systems, but the autobrake system is available only with the normal brake system.

[Option]
A brake temperature monitoring system displays each main landing gear brake temperature on the lower DU.

Landing Gear Operation

The landing gear are normally controlled by the LANDING GEAR lever. On the ground, a landing gear lever lock, prevents the LANDING GEAR lever from moving to the up position. An override trigger in the lever may be used to bypass the landing gear lever lock. In flight, the air/ground system energizes a solenoid which opens the lever lock.

Landing Gear Retraction

When the LANDING GEAR lever is moved to UP, the landing gear begins to retract. During retraction, the brakes automatically stop rotation of the main gear wheels. After retraction, the main gear are held in place by mechanical uplocks. Rubber seals and oversized hubcaps complete the fairing of the outboard wheels.

The nose wheels retract forward into the wheel well and nose wheel rotation is stopped by snubbers. The nose gear is held in place by an overcenter lock and enclosed by doors which are mechanically linked to the gear.

Hydraulic pressure is removed from the landing gear system with the LANDING GEAR lever in the OFF position.

Copyright © The Boeing Company. See title page for details.

If a main landing gear tire is damaged during takeoff, it is possible that braking of the main gear wheels during retraction may be affected. A spinning tire with a loose tread must be stopped prior to entering the wheel well or it can cause damage to wheel well components. When a spinning tire with loose tread impacts a fitting in the wheel well ring opening, that gear stops retracting and free falls back to the down position. The affected gear cannot be retracted until the fitting is replaced.

Landing Gear Transfer Unit

Hydraulic system B pressure is available for raising the landing gear through the landing gear transfer unit. Hydraulic system B supplies the volume of hydraulic fluid required to raise the landing gear at the normal rate when all of the following conditions exist:

- airborne
- No. 1 engine RPM drops below a limit value
- LANDING GEAR lever is positioned UP
- either main landing gear is not up and locked.

Landing Gear Extension

When the LANDING GEAR lever is moved to DN, hydraulic system A pressure is used to release the uplocks. The landing gear extends by hydraulic pressure, gravity and air loads. Overcenter mechanical and hydraulic locks hold the gear at full extension. The nose wheel doors remain open when the gear is down.

Landing Gear Manual Extension

If hydraulic system A pressure is lost, the manual extension system provides another means of landing gear extension. Manual gear releases on the flight deck are used to release uplocks that allow the gear to free–fall to the down and locked position. The forces that pull the gear down are gravity and air loads.

With the manual extension access door open:

- manual landing gear extension is possible with the LANDING GEAR lever in any position
- normal landing gear extension is possible if hydraulic system A pressure is available
- landing gear retraction is disabled.

Following a manual extension, the landing gear may be retracted normally by accomplishing the following steps:

- close the manual extension access door
- move the LANDING GEAR lever to DOWN with hydraulic system A pressure available, and then
- position the LANDING GEAR lever to UP.

Copyright © The Boeing Company. See title page for details.

Nose Wheel Steering

The airplane is equipped with nose wheel steering which is powered by hydraulic system A when the NOSE WHEEL STEERING switch is in the NORM position. Nose wheel steering is powered by hydraulic system B when the NOSE WHEEL STEERING switch is placed to ALT. Nose wheel steering is powered only when the airplane is on the ground. In the event of a hydraulic leak downstream of the Landing Gear Transfer Unit, resulting in a loss of hydraulic system B fluid in the reservoir, a sensor closes the Landing Gear Transfer Valve and alternate steering will be lost.

Primary steering is controlled through the nose wheel steering wheel. Limited steering control is available through the rudder pedals. A pointer on the nose steering wheel assembly shows nose wheel steering position relative to the neutral setting. Rudder pedal steering is deactivated as the nose gear strut extends.

A lockout pin may be installed in the towing lever to depressurize nose wheel steering. This allows airplane pushback or towing without depressurizing the hydraulic systems.

Brake System

Each main gear wheel has a multi–disc hydraulic powered brake. The brake pedals provide independent control of the left and right brakes. The nose wheels have no brakes. The brake system includes:

- normal brake system
- alternate brake system
- brake accumulator
- antiskid protection
- autobrake system
- parking brake

[Option]

- brake temperature indication

Normal Brake System

The normal brake system is powered by hydraulic system B.

Alternate Brake System

The alternate brake system is powered by hydraulic system A. If hydraulic system B is low or fails, hydraulic system A automatically supplies pressure to the alternate brake system.

Brake Accumulator

The brake accumulator is pressurized by hydraulic system B. If both normal and alternate brake system pressure is lost, trapped hydraulic pressure in the brake accumulator can still provide several braking applications or parking brake application.

Copyright © The Boeing Company. See title page for details.

Antiskid Protection

Antiskid protection is provided in the normal and alternate brake systems.

The normal brake hydraulic system provides each main gear wheel with individual antiskid protection. When the system detects a skid, the associated antiskid valve reduces brake pressure until skidding stops. The alternate brake hydraulic system works similar to the normal system however antiskid protection is applied to main gear wheel pairs instead of individual wheels.

Both normal and alternate brake systems provide skid, locked wheel, touchdown and hydroplane protection.

Autobrake System

The autobrake system uses hydraulic system B pressure to provide maximum deceleration for rejected takeoff and automatic braking at preselected deceleration rates immediately after touchdown. The system operates only when the normal brake system is functioning. Antiskid system protection is provided during autobrake operation.

Rejected Takeoff (RTO)

The RTO mode can be selected only when on the ground. Upon selection, the AUTO BRAKE DISARM light illuminates for one to two seconds and then extinguishes, indicating that an automatic self–test has been successfully accomplished.

To arm the RTO mode prior to takeoff the following conditions must exist:

- airplane on the ground
- antiskid and autobrake systems operational
- AUTO BRAKE select switch positioned to RTO
- wheel speed less than 60 knots
- forward thrust levers positioned to IDLE.

With RTO selected, if the takeoff is rejected prior to wheel speed reaching 90 knots autobraking is not initiated, the AUTO BRAKE DISARM light does not illuminate and the RTO autobrake function remains armed. If the takeoff is rejected after reaching a wheel speed of 90 knots, maximum braking is applied automatically when the forward thrust levers are retarded to IDLE.

The RTO mode is automatically disarmed when both air/ground systems indicate the air mode. The AUTO BRAKE DISARM light does not illuminate and the AUTO BRAKE select switch remains in the RTO position. To reset or manually disarm the autobrake system, position the selector to OFF. If a landing is made with RTO selected (AUTO BRAKE select switch not cycled through OFF), no automatic braking action occurs and the AUTO BRAKE DISARM light illuminates two seconds after touchdown.

Copyright © The Boeing Company. See title page for details.

Landing

When a landing autobrake selection is made, the system performs a turn–on–self–test. If the turn–on–self–test is not successful, the AUTO BRAKE DISARM light illuminates and the autobrake system does not arm.

Four levels of deceleration can be selected for landing. However, on dry runways, the maximum autobrake deceleration rate in the landing mode is less than that produced by full pedal braking.

After landing, autobrake application begins when:

- both forward thrust levers are retarded to IDLE
- the main wheels spin–up.

Note: Landing autobrake settings may be selected after touchdown prior to decelerating through 60 kts of ground speed. Braking initiates immediately if the above conditions are met.

To maintain the selected landing deceleration rate, autobrake pressure is reduced as other controls, such as thrust reversers and spoilers, contribute to total deceleration. The deceleration level can be changed (without disarming the system) by rotating the selector. The autobrake system brings the airplane to a complete stop unless the braking is terminated by the pilot.

Autobrake – Disarm

The pilots may disarm the autobrake system by moving the selector switch to the OFF position. This action does not cause the AUTO BRAKE DISARM light to illuminate. After braking has started, any of the following pilot actions disarm the system immediately and illuminate the AUTO BRAKE DISARM light:

- moving the SPEED BRAKE lever to the down detent
- advancing the forward thrust lever(s), except during the first 3 seconds after touchdown for landing
- applying manual brakes.

Parking Brake

The parking brake can be set with either A or B hydraulic systems pressurized. If A and B hydraulic systems are not pressurized, parking brake pressure is maintained by the brake accumulator. Accumulator pressure is shown on the HYD BRAKE PRESS indicator.

The parking brake is set by depressing both brake pedals fully, while simultaneously pulling the PARKING BRAKE lever up. This mechanically latches the pedals in the depressed position and commands the parking brake valve to close.

Copyright © The Boeing Company. See title page for details.

The parking brake is released by depressing the pedals until the PARKING BRAKE lever releases. A fault in the parking brake system may cause the ANTISKID INOP light to illuminate.

The takeoff configuration warning horn sounds if either forward thrust lever is advanced for takeoff with the parking brake set.

Copyright © The Boeing Company. See title page for details.

Air/Ground System

In flight and ground operation of various airplane systems are controlled by the air/ground system.

The system receives air/ground logic signals from six sensors, two on each landing gear. These signals are used to configure the airplane systems to the appropriate air or ground status.

Air/Ground System Logic Table

[Option - APU Auto Discharge, GPS]

SYSTEMS	NORMAL INFLIGHT OPERATION	NORMAL ON GROUND OPERATION	REFER TO CH
Emergency Exit Doors	Flight locks engaged when either engine N2 is more than 50% and 3 or more Entry/Service doors are closed.	Flight locks disengaged when either thrust lever is set below approximately 53 degrees.	1
Pack Valves	With one pack operating, regulates to high flow with flaps up.	With one pack operating, regulates to high flow only when pack is operating from the APU and both engine bleed switches are OFF.	2
Pressurization	Allows programmed pressurization in the automatic modes.	Allows pressurization only at high power settings.	2
Ram Air	Ram Air fans operate whenever air conditioning packs operate.	Ram Air fans operate whenever air conditioning packs operate. Deflectors are extended.	2
Wing Anti–ice	Control valves open when switch is ON. Thrust setting and duct temperature logic is bypassed.	With switch ON, valves cycle open and closed. Switch trips to OFF at lift–off.	3
Autothrottle	Enables go–around below 2000 ft radio altitude.	Disengaged 2 seconds after landing. Takeoff mode enabled.	4
TO/GA switch	Flight director engages go–around mode.	Flight director engages takeoff mode.	4

Copyright © The Boeing Company. See title page for details.

SYSTEMS	NORMAL INFLIGHT OPERATION	NORMAL ON GROUND OPERATION	REFER TO CH
ACARS	Sends out signal on strut extension for takeoff signal.	Sends out signal on strut compression for landing signal.	5
Voice Recorder	Prevents tape erasure.	Allows tape erasure when parking brake is set.	5
Engine Idle Control	Enables minimum flight idle.	Enables minimum ground idle.	7
Thrust Reverser	Thrust reverse disabled.	Thrust reverse enabled.	7
APU Fire Horn	Wheel well horn disabled.	Wheel well horn enabled.	8
APU Fire Protection	Automatic bottle firing disabled.	Automatic bottle firing enabled if both engines shutdown.	8
Speed Brake Lever Actuator	Can be armed to raise ground spoilers for landing.	Activates SPEED BRAKE lever on landing if armed. Rejected take–off feature available. Drives to DOWN when thrust lever advanced.	9
Auto Slat	System enabled with flaps 1, 2, or 5 selected. PTU available if system B pressure is lost.	System disabled.	9
Flight Recorder	Operates anytime electrical power is available.	Operates anytime electrical power is available and either engine is operating.	10
FMC	FMC position updated from GPS, DME or VOR/DME.	FMC position updated from GPS.	11
Standby Hydraulic	Pump automatic operation with flaps extended and A or B pressure lost.	Wheel speed must be greater than 60 knots for automatic operation.	13
Antiskid	Releases normal or alternate brakes for touchdown protection.	Allows normal antiskid braking after wheel spin–up.	14

Copyright © The Boeing Company. See title page for details.

SYSTEMS	NORMAL INFLIGHT OPERATION	NORMAL ON GROUND OPERATION	REFER TO CH
Autobrakes	Allows selection of landing mode.	RTO mode available and landing mode may be selected after touchdown if wheel speed is greater than 60 knots.	14
Landing Gear Lever Lock	Lever lock solenoid released.	Lever lock solenoid latched.	14
Landing Gear Transfer Unit	Enabled.	Disabled.	14
Stall Warning	Enabled.	Disabled.	15
Takeoff Warning	Disabled.	Enabled.	15

Copyright © The Boeing Company. See title page for details.

Intentionally
Blank

Copyright © The Boeing Company. See title page for details.

DO NOT USE FOR FLIGHT

Controls and Indicators 15.10.1

Fire Warning and Master Caution System 15.10.1

Proximity Switch Electronic Unit Light 15.10.2

Mach/Airspeed Warning and Stall Warning Test Switches 15.10.3

Landing Gear Warning Cutout Switch 15.10.4

Altitude Alert 15.10.4

Ground Proximity Warning System (GPWS) 15.10.6

GPWS Controls 15.10.6

Terrain Display 15.10.8

Terrain Display 15.10.10

Predictive Windshear Display and Annunciations 15.10.11

Predictive Windshear Display and Annunciations 15.10.12

TCAS Controls (Transponder Panel) 15.10.13

System Description 15.20.1

Introduction 15.20.1

Master Fire Warning Lights 15.20.2

Master Caution Lights 15.20.2

System Annunciator Lights 15.20.3

Warning Systems 15.20.5

Takeoff Configuration Warning 15.20.5

Landing Gear Configuration Warnings 15.20.5

Proximity Switch Electronic Unit (PSEU) 15.20.6

Mach/Airspeed Warning System 15.20.7

Stall Warning System 15.20.7

Altitude Alerting System 15.20.8

Acquisition Alerting 15.20.8

Deviation Alerting 15.20.8

Altitude Alert Profile 15.20.9

Copyright © The Boeing Company. See title page for details.

Altitude Alerting System 15.20.9
Acquisition Alerting 15.20.9
Deviation Alerting 15.20.10
Altitude Alert Profile 15.20.10
Ground Proximity Alerts 15.20.10
Look–Ahead Terrain Alerting 15.20.11
Radio Altitude Based Alerts 15.20.12
Windshear Alerts 15.20.13
Windshear Warning (Airplane in Windshear) 15.20.14
Predictive Windshear Alerts 15.20.14
Bank Angle Alert 15.20.16
Approach Callouts 15.20.17
Radio Altitude Callouts 15.20.17
DH/MDA Callouts 15.20.17
Traffic Alert and Collision Avoidance System (TCAS) 15.20.17
Advisories and Displays 15.20.18
Inhibits 15.20.19
Inhibits 15.20.19
Mode Control 15.20.19
Resolution Advisory Aurals 15.20.21
Tail Skid 15.20.22
Tail Skid Detail 15.20.23

Copyright © The Boeing Company. See title page for details.

DO NOT USE FOR FLIGHT

Fire Warning and Master Caution System

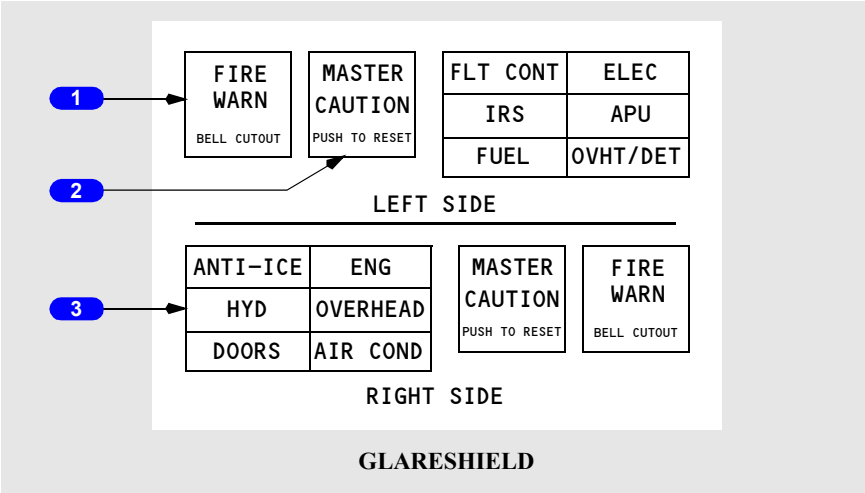

GLARESHIELD

1 Master Fire Warning (FIRE WARN) Lights

Illuminated (red) – indicates a fire warning (or system test) in engine, cargo, APU or main gear wheel well

- fire warning bell sounds
- if on ground, remote APU fire warning horn sounds.

Push –

- extinguishes both master FIRE WARN lights
- silences fire warning bell
- silences remote APU fire warning horn
- resets system for additional warnings.

Note: Pushing fire warning bell cutout switch on overheat/fire protection panel results in same actions.

2 MASTER CAUTION Lights

Illuminated (amber) – a system annunciator light has illuminated.

Push – extinguishes both MASTER CAUTION lights

- system annunciator light(s) extinguish
- resets system for additional master caution conditions.

Copyright © The Boeing Company. See title page for details.

3 System Annunciator Panel

Illuminated (amber) – an amber light, relating to illuminated system annunciator, has illuminated on forward overhead, aft overhead or overheat/fire protection panel.

To extinguish – push either MASTER CAUTION light.

To recall – push and release either system annunciator panel

- if a master caution condition exists, appropriate system annunciator(s) and MASTER CAUTION lights illuminate
- a single fault in certain redundant systems, or some simple faults, cause the system annunciator light to illuminate during a recall. The system annunciator light will extinguish when the MASTER CAUTION light is pushed.

Proximity Switch Electronic Unit Light

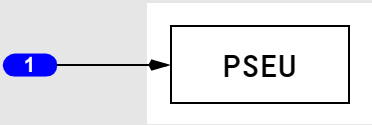

AFT OVERHEAD

1 Proximity Switch Electronic Unit (PSEU) Light

Illuminated (amber) –

- on the ground –
  - a fault is detected in the PSEU, or
  - an overwing exit flight lock fails to disengage when commanded.
- in-flight –
  - inhibited from thrust lever advance for takeoff until 30 seconds after landing.

Copyright © The Boeing Company. See title page for details.

Mach/Airspeed Warning and Stall Warning Test Switches

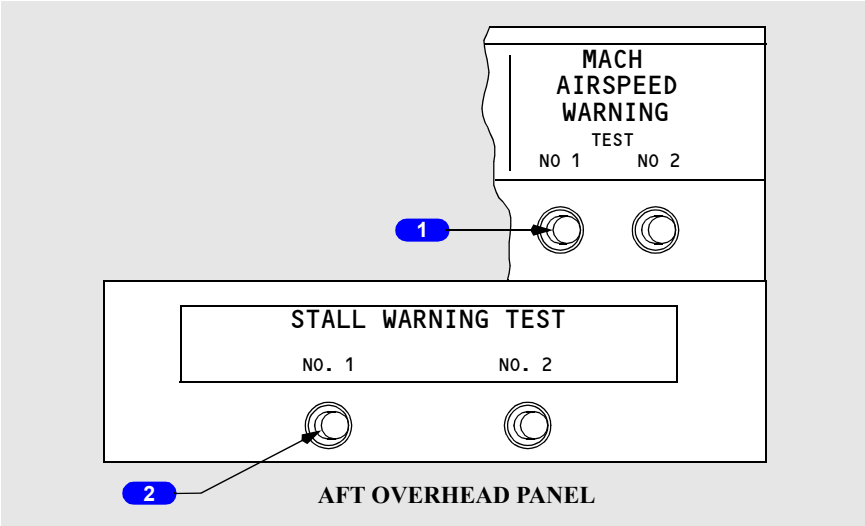

1 MACH AIRSPEED WARNING TEST Switches

Push – tests respective mach/airspeed warning system

- clacker sounds
- inhibited while airborne.

2 STALL WARNING TEST Switches

Push – on ground with AC power available: each test switch tests its respective stall management yaw damper (SMYD) computer. No.1 SMYD computer shakes Captain's control column, No.2 SMYD computer shakes First Officer's control column. Vibrations can be felt on both columns

- inhibited while airborne.

Copyright © The Boeing Company. See title page for details.

Landing Gear Warning Cutout Switch

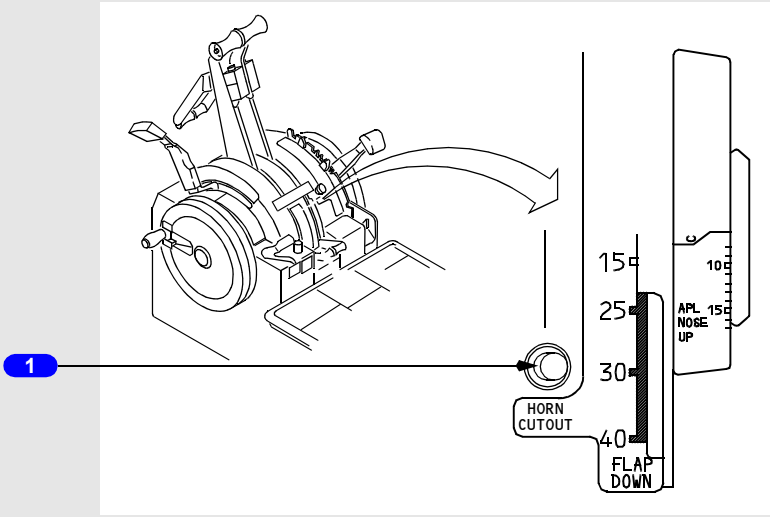

CONTROL STAND

1 Landing Gear Warning Cutout Switch

Push – silences landing gear configuration warning aural indication at flaps up through 10 and above 200 feet RA.

Note: The aural indication cannot be silenced with the cutout switch at flaps greater than 10.

Altitude Alert

[Option - EFIS/MAP]

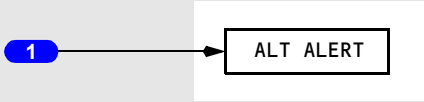

ABOVE EACH PILOT'S
ALTIMETER

1 Altitude Alert (ALT ALERT) Annunciation
[Option - 300/900 Altitude alert]

One on each pilot's primary display above altimeter.

Copyright © The Boeing Company. See title page for details.

Displayed (amber):

- steady – acquisition alert:
  - 900 feet from MCP selected altitude
  - momentary tone also sounds
  - 300 feet from MCP selected altitude, ALT ALERT annunciation no longer shows.
- flashing – deviation alert:
  - deviation more than 300 feet from MCP selected altitude
  - momentary tone also sounds
  - flashing continues until:
    - altitude deviation less than 300 feet, or
    - altitude deviation more than 900 feet, or
    - new MCP altitude selected.

[Option - PFD/ND]

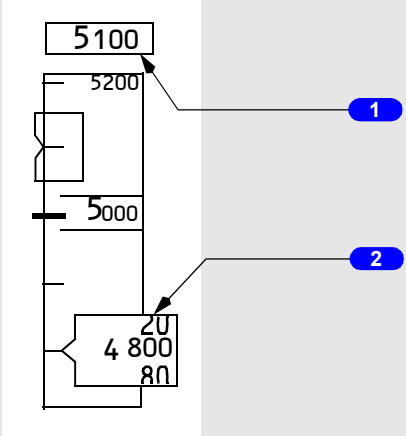

CAPTAIN'S PFD
FIRST OFFICER'S PFD

1 Selected Altitude Alert
[Option - 300/900 Altitude alert]

A white box shows around the selected altitude display between 900 feet and 300 feet before reaching the selected altitude.

Copyright © The Boeing Company. See title page for details.

2 Current Altitude Alert
[Option - 300/900 Altitude alert]

The white box around the current altitude display becomes bold between 900 feet and 300 feet before reaching the selected altitude.

The box turns amber and flashes for 300 feet to 900 feet deviation from the selected altitude.

Ground Proximity Warning System (GPWS)

GPWS Controls

[Option - With gear inhibit switch]

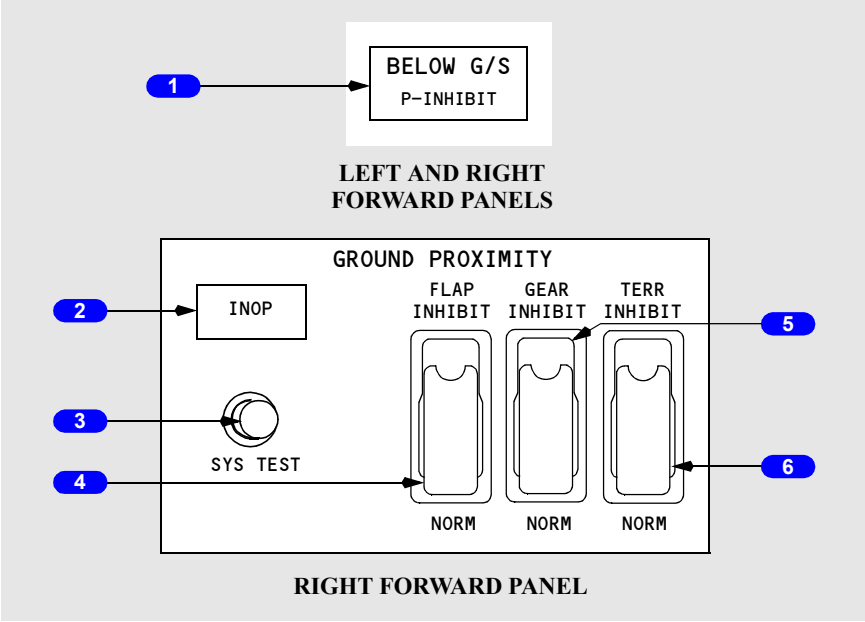

1 BELOW Glide Slope (G/S) light

Illuminated (amber) – below glide slope alert is active.

Push – inhibits ground proximity GLIDE SLOPE alert when below 1,000 feet radio altitude.

Copyright © The Boeing Company. See title page for details.

2 Inoperative (INOP) light

Illuminated (amber) – GPWS computer malfunction or power loss

- invalid inputs are being received from radio altimeter, ADIRU, ILS receiver, IRS, FMC, stall management computers, or EFIS control panel.

3 Ground Proximity System Test (SYS TEST) Switch

Push –

- momentarily on ground:
  - BELOW G/S and GPWS INOP lights illuminate
  - TERR FAIL and TERR TEST show on navigation displays
  - PULL UP and WINDSHEAR alerts illuminate
  - GLIDE SLOPE, PULL UP, and WINDSHEAR aurals sound
  - terrain display test pattern shows on navigation displays
  - terrain caution aural sounds and TERRAIN caution message shows on navigation displays.
- until self-test aurals begin, on ground, above indications always occur first, followed by these additional aurals, as described in section 15-20:
  - radio altitude based alerts
  - bank angle alert
  - approach callouts
  - windshear alert
  - look ahead terrain alerts
- system test inhibited in-flight.

4 Ground Proximity FLAP INHIBIT Switch

FLAP INHIBIT – inhibits ground proximity TOO LOW FLAPS alert.

NORM (guarded position) – Normal TOO LOW FLAPS alert active.

5 Ground Proximity GEAR INHIBIT Switch
[Option - With gear inhibit switch]

GEAR INHIBIT –

- inhibits ground proximity TOO LOW GEAR alert
- inhibits landing gear configuration warning horn.

NORM (guarded position) – Normal TOO LOW GEAR alert active.

6 Ground Proximity Terrain Inhibit (TERR INHIBIT) Switch

TERR INHIBIT – inhibits look–ahead terrain alerts and terrain display.

NORM (guarded position) – Normal terrain alerts and terrain display active.

Copyright © The Boeing Company. See title page for details.

GPWS Terrain Display Select Switch

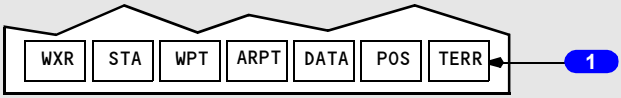

EFIS Control Panel

1 Terrain (TERR) Display Select Switch

Push –

- shows terrain data in expanded MAP, center MAP, expanded VOR, and expanded APP modes
- arms terrain data in PLN, center VOR, and center APP modes
- deselects weather radar display regardless of mode selector position
- second push deselects terrain display.

Terrain Display

[Option - PFD/ND]

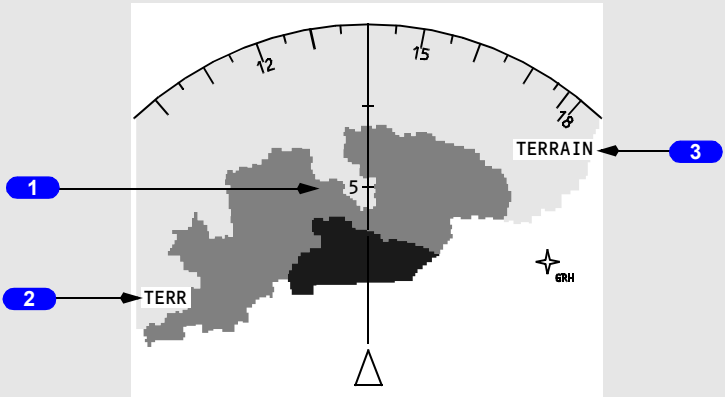

NAVIGATION DISPLAY

1 Terrain Display

Color and density vary based on terrain height vs. airplane altitude:

- dotted green: terrain from 2,000 feet below to 500 feet (250 feet with gear down) below the airplane's current altitude
- dotted amber: terrain 500 feet (250 feet with gear down) below to 2,000 feet above the airplane's current altitude
- dotted red: terrain more than 2,000 feet above airplane's current altitude
- dotted magenta: no terrain data available

Copyright © The Boeing Company. See title page for details.

- solid amber: look–ahead terrain caution active
- solid red: look–ahead terrain warning active.

Note: In areas without terrain data, look-ahead terrain alerting and display functions not available. Radio altitude based terrain alerts function normally.

Note: Terrain more than 2,000 feet below airplane altitude or within 400 feet of nearest airport runway elevation does not show.

Automatically shows when:

- a look–ahead terrain alert occurs, and
- neither pilot has the terrain display selected, and
- in expanded MAP, center MAP, expanded VOR, or expanded APP modes.

Updates with a display sweep, similar to weather radar display.

2 Terrain Mode Annunciation

TERR (cyan) – Terrain display enabled (manual or automatic display).

3 TERRAIN Annunciation

TERRAIN (amber) – look–ahead terrain caution alert active.

TERRAIN (red) – look–ahead terrain warning alert active.

Shows in all navigation display modes.

Copyright © The Boeing Company. See title page for details.

Terrain Display
[Option - EFIS/MAP]

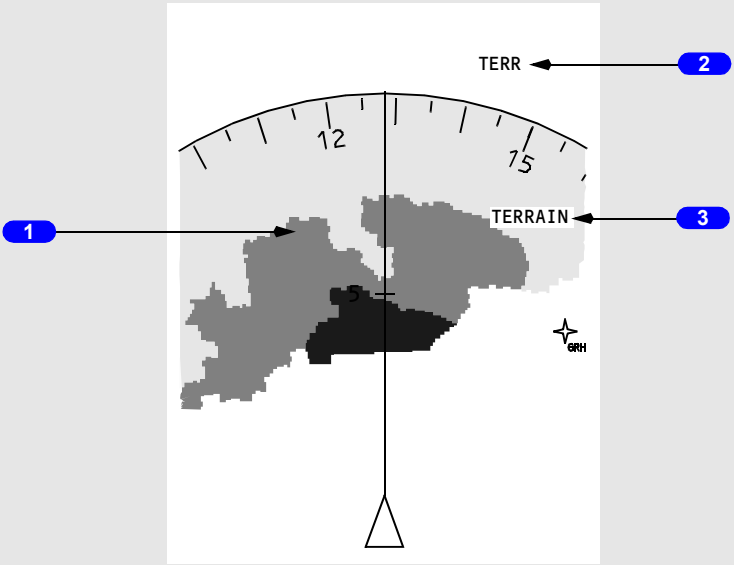

NAVIGATION DISPLAY

1 Terrain Display

Color and density vary based on terrain height vs. airplane altitude:

- dotted green: terrain from 2,000 feet below to 500 feet (250 feet with gear down) below the airplane's current altitude
- dotted amber: terrain 500 feet (250 feet with gear down) below to 2,000 feet above the airplane's current altitude
- dotted red: terrain more than 2,000 feet above airplane's current altitude
- dotted magenta: no terrain data available
- solid amber: look–ahead terrain caution active
- solid red: look–ahead terrain warning active.

Note: In areas without terrain data, look-ahead terrain alerting and display functions not available. Radio altitude based terrain alerts function normally.

Note: Terrain more than 2,000 feet below airplane altitude or within 400 feet of nearest airport runway elevation does not show.

Copyright © The Boeing Company. See title page for details.

Automatically shows when:

- a look–ahead terrain alert occurs, and
- neither pilot has the terrain display selected, and
- in expanded MAP, center MAP, expanded VOR, or expanded APP modes.

Updates with a display sweep, similar to weather radar display.

2 Terrain Mode Annunciation

TERR (cyan) – Terrain display enabled (manual or automatic display).

3 TERRAIN Annunciation

TERRAIN (amber) – look–ahead terrain caution alert active.

TERRAIN (red) – look–ahead terrain warning alert active.

Shows in all navigation display modes.

Predictive Windshear Display and Annunciations

[Option - PFD/ND]

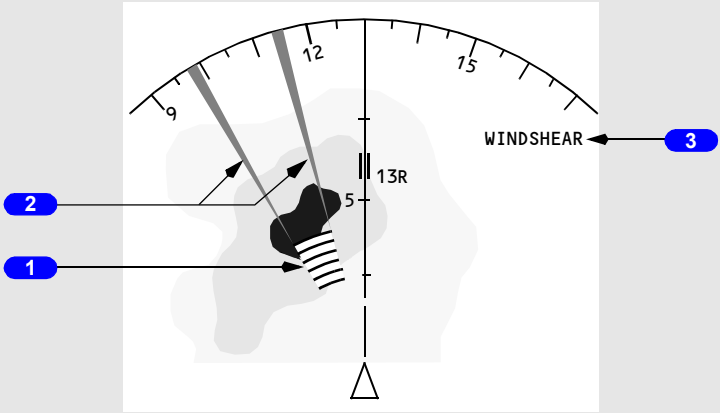

NAVIGATION DISPLAY

1 Predictive Windshear Symbol

Displayed (red and black) – Predictive windshear alert active.

Shows windshear location and approximate geometric size (width and depth).

Symbol, radials, and weather radar returns automatically show when:

- predictive windshear alert occurs, and
- neither pilot has WXR display selected, and
- in expanded MAP, center MAP, VOR, or APP modes.

Copyright © The Boeing Company. See title page for details.

When terrain display is active, weather radar display replaces terrain display.

2 Predictive Windshear Symbol Radials

Displayed (amber) – Predictive windshear alert active.

Extend from predictive windshear symbol to help identify location of windshear event

3 WINDSHEAR Annunciation

WINDSHEAR (amber) – predictive windshear caution active.

WINDSHEAR (red) – predictive windshear warning active.

Shows in all navigation display modes.

Predictive Windshear Display and Annunciations
[Option - EFIS/MAP]

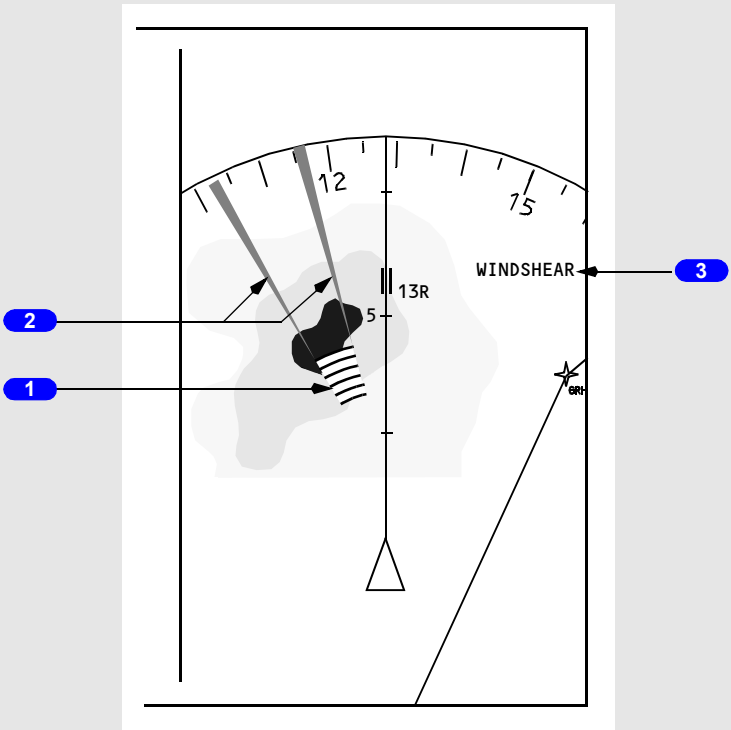

NAVIGATION DISPLAY

Copyright © The Boeing Company. See title page for details.

1 Predictive Windshear Symbol

Displayed (red and black) – Predictive windshear alert active.

Shows windshear location and approximate geometric size (width and depth).

Symbol, radials, and weather radar returns automatically show when:

- predictive windshear alert occurs, and
- neither pilot has WXR display selected, and
- in expanded MAP, center MAP, VOR, or APP modes.

When terrain display is active, weather radar display replaces terrain display.

2 Predictive Windshear Symbol Radials

Displayed (amber) – Predictive windshear alert active.

Extend from predictive windshear symbol to help identify location of windshear event.

3 WINDSHEAR Annunciation

WINDSHEAR (amber) – predictive windshear caution active.

WINDSHEAR (red) – predictive windshear warning active.

Shows in all navigation display modes.

TCAS Controls (Transponder Panel)

[Option - AlliedSignal 071-01503-2601 Transponder Panel]

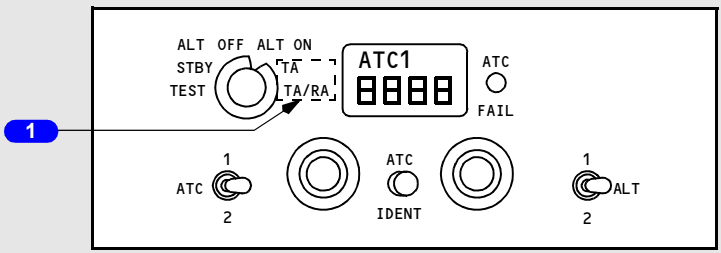

AFT ELECTRONIC PANEL

Copyright © The Boeing Company. See title page for details.

[Option - Gables G6992-02 Transponder Panel]

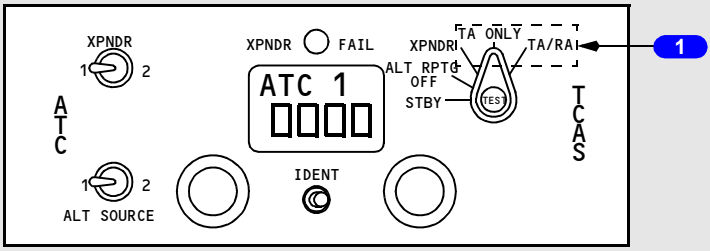

AFT ELECTRONIC PANEL

1 Transponder Mode Selector

TA (traffic advisory) – enables the display of traffic advisory (TA) targets.

TA/RA (resolution advisory) – enables the display of traffic advisory (TA) and resolution advisory (RA) targets.

Copyright © The Boeing Company. See title page for details.

DO NOT USE FOR FLIGHT

Introduction

Aural, tactile and visual warning signals alert the flight crew to conditions requiring action or caution in the operation of the airplane. The character of the signals varies, depending upon the degree of urgency or hazards involved. Aural, tactile, and visual signals are used singularly or in combination to simultaneously provide both warnings and information regarding the nature of the condition.

Mach/airspeed warnings, landing gear warnings, takeoff configuration warnings, windshear warnings, and ground proximity warnings are discussed in this section. Cabin altitude warning is discussed in the Air Systems chapter, and autopilot and autothrottle disconnect warnings are discussed in the Automatic Flight chapter. The conditions which excite the fire warning bell are discussed in the Fire Protection chapter.

Conditions which require the immediate attention of the flight crew are indicated by red warning lights located in the area of the pilots' primary field of vision. These lights indicate engine, wheel well, cargo, or APU fires; autopilot, autothrottle disconnects; and landing gear unsafe conditions.

Conditions which require the timely attention of the flight crew are indicated by amber caution lights.

Blue lights inform the flight crew of electrical power availability, valve position, equipment status, and flight attendant or ground communications. Blue lights are for information and do not require immediate flight crew attention. Some system blue lights indicate a transitional state by illuminating bright as valves or components reposition, then returning to a dim blue when the required configuration is reached.

Green lights indicate a fully extended configuration, e.g., landing gear and leading edge devices.

For specific information regarding red, amber, blue, and green lights refer to the appropriate systems chapters.

Stall warning is provided by a control column shaker on each control column.

Various aural signals call attention to warnings and cautions. An aural warning for airspeed limits is given by a clacker, the autopilot disconnect by a warning tone, cabin altitude by an intermittent horn, and landing gear positions by a steady horn. The takeoff configuration is given by an intermittent horn, and the fire warning by a fire warning bell. Ground proximity warnings and alerts, and windshear warnings and alerts are given by voice warnings.

Copyright © The Boeing Company. See title page for details.

Generally, aurals automatically silence when the associated non–normal condition no longer exists.

Master Fire Warning Lights

Two master FIRE WARN lights illuminate when any fire warning condition occurs. The lights remain illuminated as long as the condition exists. Pushing either master FIRE WARN light or fire warning bell cutout switch extinguishes both lights, silences the fire warning bell and resets the system for future warnings. Further information appears in the Fire Protection chapter.

Master Caution Lights

Two MASTER CAUTION lights illuminate when any caution occurs outside the normal field of vision of the flight crew. The lights remain illuminated as long as the caution condition exists, or until the crew resets the system. Pushing either MASTER CAUTION light extinguishes both lights and resets the master caution system for further cautions. Pushing either annunciator light panel recalls all existing fault annunciations.

A single fault in certain redundant systems, or some simple faults, do not illuminate the MASTER CAUTION or system annunciator lights. These faults, however, are stored in the master caution system. Pushing the system annunciator recalls the single fault on the system annunciator panel.

Copyright © The Boeing Company. See title page for details.

System Annunciator Lights

Two system annunciator light panels are located on the glare shield. The annunciator light panels include only those systems located on the forward overhead, aft overhead, and fire control panels. If a caution condition exists, the appropriate system annunciator(s) and MASTER CAUTION lights illuminate.

System Annunciators and Related Amber Lights – Left Side

FLT CONT		ELEC
LOW QUANTITY LOW PRESSURE FEEL DIFF PRESS SPEED TRIM FAIL MACH TRIM FAIL AUTO SLAT FAIL YAW DAMPER STBY RUD ON		DRIVE STANDBY PWR OFF TRANSFER BUS OFF SOURCE OFF TR UNIT BATTTERY DISCHARGE ELEC
IRS	LEFT SIDE GLARESHIELD	APU
FAULT ON DC DC FAIL GPS		LOW OIL PRESSURE FAULT OVERSPEED
FUEL		OVHT/DET
LOW PRESSURE FILTER BYPASS		ENGINE 1 OVERHEAT ENGINE 2 OVERHEAT APU DET INOP

FLT CONT	**ELEC**
IRS	**APU**
FUEL	**OVHT/DET**

Copyright © The Boeing Company. See title page for details.

System Annunciators and Related Amber Lights – Right Side

[Option - 737-800/900, ICE DETECTOR, AIRSTAIR, ELT, HIGH ALTITUDE LANDING - INOP, lavatory SMOKE detector]

ANTI–ICE		ENG
WINDOW OVERHEAT PITOT HEAT COWL ANTI–ICE ICE DETECTOR		REVERSER EEC ALTN MODE ENGINE CONTROL
HYD		OVERHEAD
OVERHEAT LOW PRESSURE		ELT EQUIP COOLING– OFF EMER EXIT LIGHTS–NOT ARMED FLIGHT RECORDER–OFF PASS OXY–ON PSEU SMOKE
DOORS		AIR COND
FWD/AFT ENTRY AIRSTAIR EQUIP FWD/AFT CARGO FWD/AFT SERVICE LEFT/RIGHT OVERWING		ZONE TEMP DUAL BLEED PACK WING–BODY OVERHEAT BLEED TRIP OFF AUTO FAIL OFF SCHED DESCENT HIGH ALTITUDE LANDING - INOP

ANTI–ICE	**ENG**
HYD	**OVERHEAD**
DOORS	**AIR COND**

RIGHT SIDE GLARESHIELD

Copyright © The Boeing Company. See title page for details.

Warning Systems

Takeoff Configuration Warning

The takeoff configuration warning is armed when the airplane is on the ground and either or both forward thrust levers are advanced for takeoff. An intermittent takeoff warning horn sounds if:

- trailing edge flaps are not in the flaps 1 through 25 takeoff range, or
- leading edge devices not configured for takeoff, or
- SPEED BRAKE lever is not in the DOWN position, or
- spoilers not down with the speedbrake lever in the DOWN position, or
- parking brake is set, or
- stabilizer trim not set in the takeoff range.

The warning indication is cancelled when the configuration error is corrected.

Landing Gear Configuration Warnings

Visual indications and aural warnings of landing gear position are provided by the landing gear indicator lights and landing gear warning horn.

Visual Indications

The landing gear indication lights are activated by signals from each gear, the LANDING GEAR lever, and the forward thrust lever position as follows:

Green light illuminated – landing gear is down and locked.

Red light illuminated –

- landing gear is in disagreement with LANDING GEAR lever position (in transit or unsafe).
- landing gear is not down and locked (with either or both forward thrust levers retarded to idle, and below 800 feet AGL).

All lights extinguished – landing gear is up and locked with the LANDING GEAR lever UP or OFF.

Aural Indications

A steady warning horn is provided to alert the flight crew whenever a landing is attempted and any gear is not down and locked. The landing gear warning horn is activated by forward thrust lever and flap position as follows:

Copyright © The Boeing Company. See title page for details.

Flaps up through 10 –

- altitude below 800 feet RA, when either forward thrust lever set between idle and approximately 20 degrees thrust lever angle or an engine not operating and the other thrust lever less than 34 degrees. The landing gear warning horn can be silenced (reset) with the landing gear warning HORN CUTOUT switch
- if the airplane descends below 200 feet RA, the warning horn cannot be silenced by the warning HORN CUTOUT switch.

Flaps 15 through 25 –

- either forward thrust lever set below approximately 20 degrees or an engine not running, and the other thrust lever less than 34 degrees; the landing gear warning horn cannot be silenced with the landing gear warning HORN CUTOUT switch.

Flaps greater than 25 –

- regardless of forward thrust lever position; the landing gear warning horn cannot be silenced with the landing gear warning HORN CUTOUT switch.

The warning indication is cancelled when the configuration error is corrected.

Proximity Switch Electronic Unit (PSEU)

The PSEU monitors the following systems:

- takeoff configuration warnings
- landing configurations warnings
- landing gear
- air/ground sensing.

The PSEU, its sensors, and its input signals are monitored for internal faults. When designated faults are detected, a PSEU light on the aft overhead panel illuminates, and the OVERHEAD system annunciator light and MASTER CAUTION lights illuminate. The PSEU light can be reset following a maintenance BITE check or repair of the cause of the fault.

The PSEU light and OVERHEAD system annunciator do not illuminate for simple faults unless a system annunciator panel is pushed for recall. In this case, a simple fault, resetting the MASTER CAUTION system extinguishes the PSEU light.

The PSEU light is inhibited:

- in flight
- when the thrust levers are advanced toward takeoff power
- for 30 seconds after landing.

Copyright © The Boeing Company. See title page for details.

Mach/Airspeed Warning System

Two independent Mach/airspeed warning systems provide a distinct aural warning, a clacker, any time the maximum operating airspeed of Vmo/Mmo is exceeded. The warning clackers can be silenced only by reducing airspeed below Vmo/Mmo.

The airspeed indicator displays red warning bands indicating maximum and minimum airspeeds. Amber bands indicate maximum and minimum maneuvering airspeeds.

When either an overspeed condition or a system test occurs, the ADIRU transmits a signal to the aural warning module, sounding the clacker. The system can only be tested on the ground.

Stall Warning System

Natural stall warning (buffet) usually occurs at a speed prior to stall. In some configurations the margin between stall and natural stall warning is less than desired. Therefore, an artificial stall warning device, a stick shaker, is used to provide the required warning.

The stall warning “stick shaker” consists of two eccentric weight motors, one on each control column. They are designed to alert the pilots before a stall develops. The warning is given by vibrating both control columns. The system is armed in flight at all times. The system is deactivated on the ground.

Two independent, identical stall management yaw damper (SMYD) computers determine when stall warning is required based upon:

- alpha vane angle of attack outputs
- ADIRU outputs
- anti–ice controls
- wing configurations
- air/ground sensing
- thrust
- FMC outputs.
- mach compensation

The SMYD computers provide outputs for all stall warning to include stick shaker and signals to the pitch limit indicator and airspeed displays and the GPWS windshear detection and alert.

Two test switches are installed in the aft overhead panel. Pushing either of these initiates a self–test of the respective stall warning channel. The No.1 activates the Captain stick shaker, and the No. 2 activates the F/O stick shaker. Either stick shaker vibrates both columns through column interconnects.

Copyright © The Boeing Company. See title page for details.

Altitude Alerting System

[Option - EFIS/MAP, 300/900 altitude alert]

Altitude alerting occurs when approaching or departing the MCP–selected altitude. Altitude alerting is inhibited when trailing edge flaps are extended to 25 or greater, or while G/S is captured.

Acquisition Alerting

900 feet before reaching the selected altitude, both ALT ALERT annunciations show and a momentary tone sounds. At 300 feet from selected altitude, the ALT ALERT annunciations no longer show.

Deviation Alerting

When deviating by 300 feet from the selected altitude, a momentary tone sounds and the ALT ALERT annunciations flash. Flashing continues until:

- altitude deviation becomes less than 300 feet
- altitude deviation becomes more than 900 feet
- a new altitude is selected.

Copyright © The Boeing Company. See title page for details.

Altitude Alert Profile

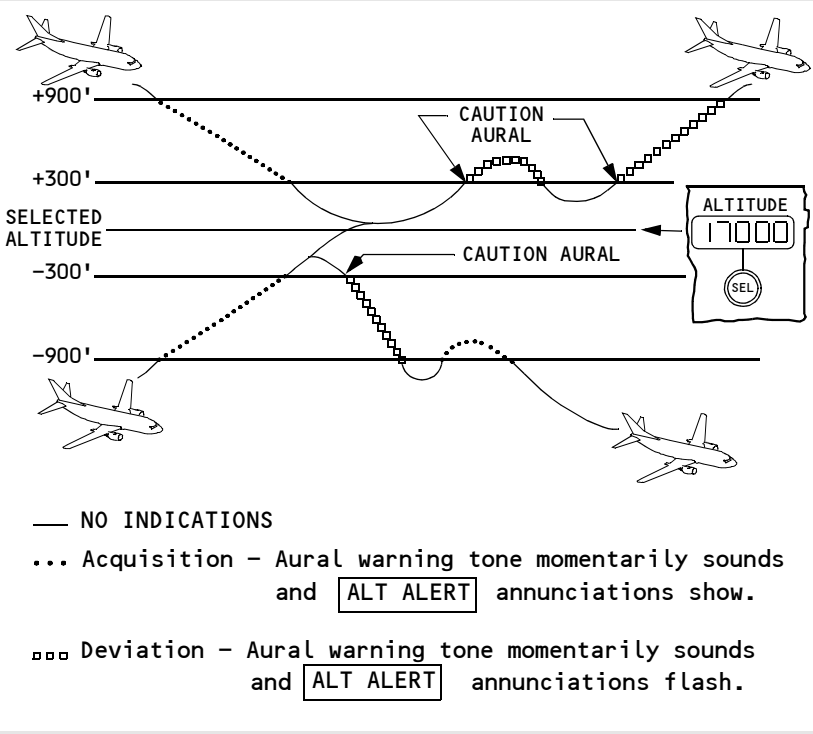

Altitude Alerting System

[Option - PFD/ND, 300/900 altitude alert]

Altitude alerting occurs when approaching or departing the MCP–selected altitude. Altitude alerting is inhibited when trailing edge flaps are extended to 25 or greater, or while G/S is captured.

Acquisition Alerting

900 feet before reaching the selected altitude, a white box shows around the selected altitude display and the box around the current altitude becomes bold. A momentary tone sounds. At 300 feet from selected altitude, the selected altitude box no longer shows.

Copyright © The Boeing Company. See title page for details.

Deviation Alerting

When deviating by 300 feet from the selected altitude, a momentary tone sounds and the current altitude box turns amber and begins to flash. The amber flashing continues until:

- altitude deviation becomes less than 300 feet
- altitude deviation becomes more than 900 feet
- a new altitude is selected.

Altitude Alert Profile

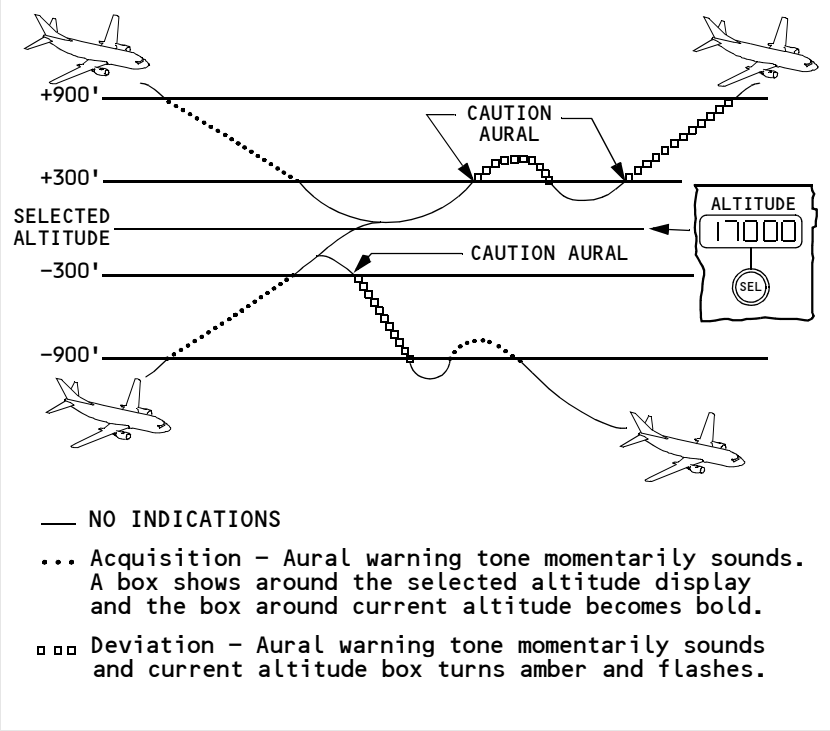

Ground Proximity Alerts

The GPWS provides alerts for potentially hazardous flight conditions involving imminent impact with the ground.

The GPWS monitors terrain proximity using an internal world wide terrain data base. Proximate terrain data shows on the navigation display. If there is a potential terrain conflict, alerts are provided based on estimated time to impact. These alerts are “look-ahead terrain alerts.”

Copyright © The Boeing Company. See title page for details.

The GPWS provides alerts based on radio altitude and combinations of barometric altitude, airspeed, glide slope deviation, and airplane configuration. The alerts are for:

- excessive descent rate
- excessive terrain closure rate
- altitude loss after takeoff or go-around
- unsafe terrain clearance when not in the landing configuration
- excessive deviation below an ILS glide slope

These alerts are “radio altitude based alerts.”

Ground proximity alerts are accompanied by voice aural alerts and the PULL UP annunciation on the attitude indicators or, for deviation below glide slope alert, the BELOW G/S light.

Note: Terrain ahead of the airplane may exceed available climb performance. A ground proximity alert does not guarantee terrain clearance.

Look-ahead terrain alerts and radio altitude based alerts are prioritized based on the level of hazard and the required flight crew reaction time. Look-ahead terrain alerts and radio altitude based alerts are inhibited by an actual windshear warning (airplane in windshear).

Look–Ahead Terrain Alerting

The GPWS terrain data base contains detailed terrain data near major airports, and data in lesser detail for areas between airports. Terrain within 2,000 feet of airplane barometric altitude shows on the navigation display. The terrain data is not designed to be an independent navigation aid.

Note: The GPWS terrain data base, look-ahead terrain alerting, and terrain display do not account for man made obstructions.

The terrain display is generated from a data base contained in the GPWS computer and correlated to GPS position.

Terrain and weather radar cannot show together on a display. If one pilot selects terrain and the other pilot selects weather radar, each display updates on alternating sweeps. All other displays (TCAS, LNAV routing, etc.) can show with terrain data.

Look-ahead terrain alerts are based on the airplane’s position, barometric altitude, vertical flight path, and ground speed.

Copyright © The Boeing Company. See title page for details.

Look Ahead Terrain Alerts

AURAL ALERT	VISUAL ALERT	DESCRIPTION
TERRAIN TERRAIN PULL UP	PULL UP on both attitude indicators Red TERRAIN message on navigation display (all modes) Solid red terrain on navigation display	20 to 30 seconds from projected impact with terrain shown solid red on the navigation display (in expanded MAP, center MAP, expanded VOR, or expanded APP modes only). Moving the ground proximity terrain inhibit switch to TERRAIN INHIBIT inhibits the alert.
CAUTION TERRAIN	Amber TERRAIN message on navigation display (all modes) Solid amber terrain on navigation displays	40 to 60 seconds from projected impact with terrain shown solid amber on the navigation display (in expanded MAP, center MAP, expanded VOR, or expanded APP modes only). Moving the ground proximity terrain inhibit switch to TERRAIN INHIBIT inhibits the alert.
TOO LOW, TERRAIN	PULL UP on both attitude indicators	Descent below unsafe radio altitude while too far from any airport in the terrain database. Moving the ground proximity terrain inhibit switch to TERRAIN INHIBIT inhibits the alert.

Radio Altitude Based Alerts

AURAL ALERT	VISUAL ALERT	DESCRIPTION
PULL UP	PULL UP on both attitude indicators	Follows SINK RATE alert if descent rate becomes severe. Follows radio altitude based TERRAIN alert if excessive terrain closure rate continues and landing gear and/or flaps are not in landing configuration.
TERRAIN	PULL UP on both attitude indicators	Excessive terrain closure rate.
DON’T SINK	PULL UP on both attitude indicators	Excessive altitude loss after takeoff or go–around.

Copyright © The Boeing Company. See title page for details.

AURAL ALERT	VISUAL ALERT	DESCRIPTION
GLIDE SLOPE	BELOW G/S P–INHIBIT lights	Deviation below glide slope. Volume and repetition rate increase as deviation increases. Pushing the ground proximity BELOW G/S P-INHIBIT light cancels or inhibits the alert below 1,000 feet RA.
SINK RATE	PULL UP on both attitude indicators	Excessive descent rate.
TOO LOW, FLAPS	PULL UP on both attitude indicators	Unsafe terrain clearance at low airspeed with flaps not in a normal landing position. Pushing the ground proximity flap override switch to FLAP INHIBIT inhibits the alert.
TOO LOW, GEAR	PULL UP on both attitude indicators	Unsafe terrain clearance at low airspeed with landing gear not down. Pushing the ground proximity gear override switch to GEAR INHIBIT inhibits the alert.
TOO LOW, TERRAIN	PULL UP on both attitude indicators	Unsafe terrain clearance at high airspeed with either landing gear not down or flaps not in landing position. Follows DON'T SINK if another descent is initiated after initial alert, before climbing to the altitude where the initial descent began.

Windshear Alerts

Windshear alerts are available during takeoff, approach, and landing:

- The GPWS provides a warning when the airplane is in a windshear.
- The weather radar provides alerts for excessive windshear ahead of the airplane. These are "predictive windshear alerts."

Windshear warnings are accompanied by WINDSHEAR on the attitude indicators and voice aural alerts.

Windshear cautions are accompanied by a voice aural alert.

Windshear alerts are prioritized based on the level of hazard and the required flight crew reaction time. Predictive windshear alerts are inhibited by an actual windshear warning (airplane in windshear), look-ahead terrain alerts, or radio altitude based alerts.

Copyright © The Boeing Company. See title page for details.

Windshear Warning (Airplane in Windshear)

AURAL ALERT	VISUAL ALERT	DESCRIPTION
Two–tone siren followed by WINDSHEAR	Red WINDSHEAR on both attitude indicators.	Excessive windshear at the current airplane position detected by GPWS. Enabled below 1,500 feet RA. GPWS Windshear detection begins at rotation.

Predictive Windshear Alerts

The weather radar uses radar imaging to detect disturbed air prior to entering a windshear.

Note: The weather radar provides windshear alerts for windshear events containing some level of moisture or particulate matter.

Note: The weather radar detects microbursts and other windshears with similar characteristics. The weather radar does not provide alerting for all types of windshear. The flight crew must continue to rely on traditional windshear avoidance methods.

Copyright © The Boeing Company. See title page for details.

AURAL ALERT	VISUAL ALERT	DESCRIPTION
WINDSHEAR AHEAD	Red WINDSHEAR on both attitude indicators RED windshear symbol on navigation display Red WINDSHEAR message on navigation display (all modes)	Windshear close to and directly ahead of the airplane detected by the weather radar. Enabled during takeoff, below 1,200 feet RA. Predictive windshear symbol on the navigation display shows windshear position (expanded MAP, center MAP, and expanded VOR or APP modes only).
GO AROUND, WINDSHEAR AHEAD	Red WINDSHEAR on both attitude indicators RED windshear symbol on navigation display Red WINDSHEAR message on navigation display (all modes)	Windshear within 1.5 miles and directly ahead of the airplane detected by the weather radar. Enabled during approach, below 1,200 feet RA. Predictive windshear symbol on the navigation display shows windshear position (expanded MAP, center MAP, and expanded VOR or APP modes only).
MONITOR RADAR DISPLAY	RED windshear symbol on navigation display Amber WINDSHEAR message on navigation display (all modes)	Windshear within 3 miles and ahead of the airplane detected by the weather radar. Enabled during takeoff and approach, below 1,200 feet RA. Predictive windshear symbol on the navigation display shows windshear position (expanded MAP, center MAP, and expanded VOR or APP modes only).

The weather radar automatically begins scanning for windshear when:

- thrust levers set for takeoff, or
- in flight below 2,300 feet RA (predictive windshear alerts are issued below 1,200 feet RA).

[Option - Without Collins weather radar 622-5132-632 or 622-5132-633]
Alerts are available approximately 12 seconds after the weather radar begins scanning for windshear. Predictive windshear alerts can be enabled prior to takeoff by pushing the EFIS control panel WXR switch.

Copyright © The Boeing Company. See title page for details.

[Option - With Collins weather radar 622-5132-632 or 622-5132-633]
Alerts are available approximately 12 seconds after the weather radar begins scanning for windshear. Predictive windshear alerts can be enabled prior to takeoff by pushing the EFIS control panel WXR switch. When PWS is enabled, radar antenna scan sweep is reduced.

If windshear is not detected, weather radar returns show only after pushing the EFIS control panel WXR switch.

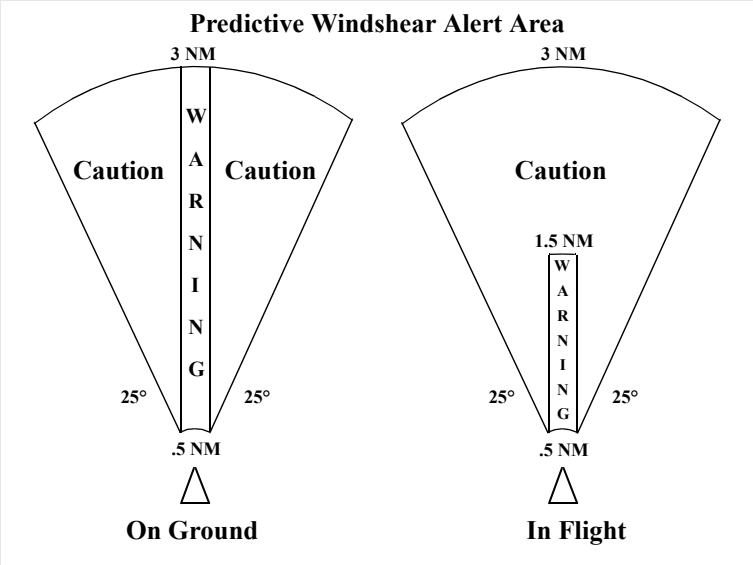

Predictive Windshear Inhibits

During takeoff and landing, new predictive windshear caution alerts are inhibited between 80 knots and 400 feet RA, and new warning alerts between 100 knots and 50 feet RA. These inhibits do not remove existing predictive windshear alerts.

Bank Angle Alert

The GPWS provides the aural alert BANK ANGLE, BANK ANGLE when roll angle exceeds 35 degrees, 40 degrees, and 45 degrees. Once sounded, the alert is silent for that bank angle (35, 40, or 45 degrees) until the system is reset by decreasing bank angle to 30 degrees or less.

Copyright © The Boeing Company. See title page for details.

Approach Callouts

Radio Altitude Callouts

[Option - Typical]

The GPWS provides the following altitude callouts during approach:

- 2,500 feet – TWENTY FIVE HUNDRED
- 1,000 feet – ONE THOUSAND
- 500 feet – FIVE HUNDRED
- 100 feet – ONE HUNDRED
- 50 feet – FIFTY
- 40 feet – FORTY
- 30 feet – THIRTY
- 20 feet – TWENTY
- 10 feet – TEN.

Note: Callouts at 1000 feet and 500 feet are based on barometric altitude above the landing field elevation; callouts at 2,500 feet, and below 500 feet are based on radio altitude.

DH/MDA Callouts

The GPWS provides height callouts based on the altitude set by the Captain's Minimums selector.

[Option - PFD/ND]
Callouts are based on radio altitude when the MINS selector is set to RADIO. Callouts are based on barometric altitude when the MINS selector is set to BARO:

- DH/MDA plus 100 feet – PLUS HUNDRED
- at DH/MDA – MINIMUMS

[Option - EFIS/MAP]
Callouts are based on radio altitude:

- DH/MDA plus 100 feet – PLUS HUNDRED
- at DH/MDA – MINIMUMS

Traffic Alert and Collision Avoidance System (TCAS)

TCAS alerts the crew to possible conflicting traffic. TCAS interrogates operating transponders in other airplanes, tracks the other airplanes by analyzing the transponder replies, and predicts the flight paths and positions. TCAS provides advisory, flight path guidance, and traffic displays of the other airplanes to the flight crew. Neither advisory, guidance, nor traffic display is provided for other airplanes which do not have operating transponders. TCAS operation is independent of ground–based air traffic control.

Copyright © The Boeing Company. See title page for details.

To provide advisories, TCAS identifies a three dimensional airspace around the airplane where a high likelihood of traffic conflict exists. The dimensions of this airspace are based upon the closure rate with conflicting traffic.

TCAS equipment interrogates the transponders of other airplanes to determine their range, bearing, and altitude. A traffic advisory (TA) is generated when the other airplane is approximately 40 seconds from the point of closest approach. If the other airplane continues to close, a resolution advisory (RA) is generated when the other airplane is approximately 25 seconds from the point of closest approach. The RA provides aural warning and guidance as well as maneuver guidance to maintain or increase separation from the traffic.

Non–transponder equipped airplanes are invisible to TCAS. RAs can be generated if the other airplane has a mode C transponder. Coordinated RAs require both airplanes to have TCAS.

Advisories and Displays

Annunciations associated with TCAS and the traffic displays are discussed further in Chapter 10.

TAs are indicated by the aural “TRAFFIC, TRAFFIC” which sounds once and is then reset until the next TA occurs. The TRAFFIC annunciation appears on the navigation display. The TA symbol appears at the proper range and relative bearing of the other airplane. Altitude and vertical motion are included with the symbol if the other airplane is using transponder mode S or C.

RAs are indicated by one or more aural listed in the RA aural table. The TRAFFIC annunciation and RA symbol which depicts the traffic’s relative bearing, range, altitude, and vertical motion are on the navigation display similar to the TA symbol.

Additional symbols are proximate traffic and other traffic. Proximate traffic is within six miles and 1200 feet vertically, but is not expected to cause a TA or RA alert. Other traffic is beyond the six mile and 1200 feet vertical criteria. Traffic symbols are revised as the TCAS system constantly reevaluates the motion of other airplanes.

If the range of the navigation display does not permit the display of a TA or RA an OFFSCALE annunciation appears on the navigation display.

TA or RA traffic detected by TCAS which do not provide a bearing generate a no–bearing text block beneath the TRAFFIC text on the navigation display. The text block contains distance, altitude, and vertical motion information.

Vertical motion information is indicated by an arrow depicting a climb or descent if a change of greater than 500 feet per minute is detected.

Copyright © The Boeing Company. See title page for details.

TCAS display automatically shows when:

- the transponder mode selector is in TA ONLY or TA/RA, and
- a TCAS TA or RA occurs, and
- neither pilot has the TCAS (TFC) display selected, and
- in MAP, center MAP, VOR, or APP modes.

Inhibits

[Option - Without TCAS change 7.0 update]

INCREASE DESCENT RAs are inhibited below approximately 1,500 feet radio altitude.

DESCEND RAs are inhibited below approximately 1,100 feet radio altitude.

All TCAS voice annunciations and all RAs are inhibited below approximately 1,000 feet radio altitude. Below 1,000 feet when the TA/RA mode is selected on the transponder panel, TA only mode is enabled automatically and the TCAS message TA ONLY displays on the ND.

All TCAS alerts are inhibited by GPWS and windshear warnings.

Inhibits

[Option - With TCAS change 7.0 update]

INCREASE DESCENT RAs are inhibited below approximately 1,500 feet radio altitude.

DESCEND RAs are inhibited below approximately 1,100 feet radio altitude.

RAs are inhibited below approximately 1,000 feet radio altitude. Below 1,000 feet when the TA/RA mode is selected on the transponder panel, TA only mode is enabled automatically and the TCAS message TA ONLY displays on the ND.

All TCAS voice annunciations are inhibited below approximately 500 feet radio altitude.

All TCAS alerts are inhibited by GPWS and windshear warnings.

Mode Control

The TCAS operating mode is controlled from the TCAS/ATC transponder panel. TCAS is normally operated in the TA/RA mode. However, sometimes it is necessary to operate in the TA ONLY mode to prevent undesired RAs. For example, TA ONLY may be selected when intentionally operating near other airplanes such as might be found in VFR conditions at a busy airport, or on parallel approach.

Copyright © The Boeing Company. See title page for details.

ATC transponders on TCAS equipped airplanes communicate to provide appropriate coordinated avoidance maneuvers. When performance is limited, such as with an inoperative engine, select TA ONLY to prevent receiving RAs beyond the airplane's capabilities, and to prevent communicating to other airplanes an ability to perform a RA maneuver.

Copyright © The Boeing Company. See title page for details.

Resolution Advisory Aurals

The following table identifies the possible callouts associated with RAs and the vertical restrictions or maneuver recommended in each case.

[Option - Without TCAS change 7.0 update]

AURAL ALERTS	VERTICAL RESTRICTIONS/MANEUVER
MONITOR VERTICAL SPEED, MONITOR VERTICAL SPEED	Present pitch attitude is outside the RA pitch command area. Keep pitch attitude away from red area.
CLIMB, CLIMB, CLIMB	Climb at the displayed pitch
DESCEND, DESCEND, DESCEND	Descend at the displayed pitch
REDUCE CLIMB, REDUCE CLIMB	Reduce climb rate
REDUCE DESCENT, REDUCE DESCENT	Reduce descent rate
CLIMB, CROSSING CLIMB, CLIMB, CROSSING CLIMB	Climb at displayed pitch. Airplane climbs through traffic's altitude.
DESCEND, CROSSING DESCEND DESCEND, CROSSING DESCEND	Descend at displayed pitch. Airplane descends through traffic's altitude.
INCREASE CLIMB, INCREASE CLIMB	Increase climb rate from initial pitch attitude.
INCREASE DESCENT, INCREASE DESCENT	Increase descent rate from initial pitch attitude.
CLIMB – CLIMB NOW, CLIMB – CLIMB NOW	Reversal maneuver from initial descent RA.
DESCEND – DESCEND NOW, DESCEND – DESCEND NOW	Reversal maneuver from initial climb RA.
CLEAR OF CONFLICT	RA encounter terminated. Maneuver guidance no longer displayed.

Copyright © The Boeing Company. See title page for details.

[Option - With TCAS change 7.0 update]

AURAL ALERTS	VERTICAL RESTRICTIONS/MANEUVER
MONITOR VERTICAL SPEED	Present pitch attitude is outside the RA pitch command area. Keep pitch attitude away from red area.
MAINTAIN VERTICAL SPEED, MAINTAIN	
MAINTAIN VERTICAL SPEED, CROSSING MAINTAIN	
CLIMB, CLIMB	Climb at the displayed pitch
DESCEND, DESCEND	Descend at the displayed pitch
ADJUST VERTICAL SPEED, ADJUST	Reduce climb or descent rate
CLIMB, CROSSING CLIMB, CLIMB, CROSSING CLIMB	Climb at displayed pitch. Airplane climbs through traffic's altitude.
DESCEND, CROSSING DESCEND DESCEND, CROSSING DESCEND	Descend at displayed pitch. Airplane descends through traffic's altitude.
INCREASE CLIMB, INCREASE CLIMB	Increase climb rate from initial pitch attitude.
INCREASE DESCENT, INCREASE DESCENT	Increase descent rate from initial pitch attitude.
CLIMB – CLIMB NOW, CLIMB – CLIMB NOW	Reversal maneuver from initial descent RA.
DESCEND – DESCEND NOW, DESCEND – DESCEND NOW	Reversal maneuver from initial climb RA.
CLEAR OF CONFLICT	RA encounter terminated. Maneuver guidance no longer displayed.

Tail Skid

[737-800/-900]

The tail skid assembly consists of a cartridge assembly, tail skid, fairing (skirt) and shoe. The fairing provides an enclosure for the actual tail skid structure. The shoe is fitted to the bottom of the fairing.

Copyright © The Boeing Company. See title page for details.

The cartridge assembly consists of a crushable honeycomb material. When the tail skid strikes the runway the skid moves upward and the honeycomb material crushes. The tail skid is serviceable when the cartridge warning decal shows both green and red. The green disappears gradually as the cartridge is crushed. When the warning decal is all red, the cartridge must be replaced.

The shoe is what contacts the runway in the event of an over rotation. The shoe surface displays “wear dimples” which serve as a reference for shoe replacement.

Tail Skid Detail

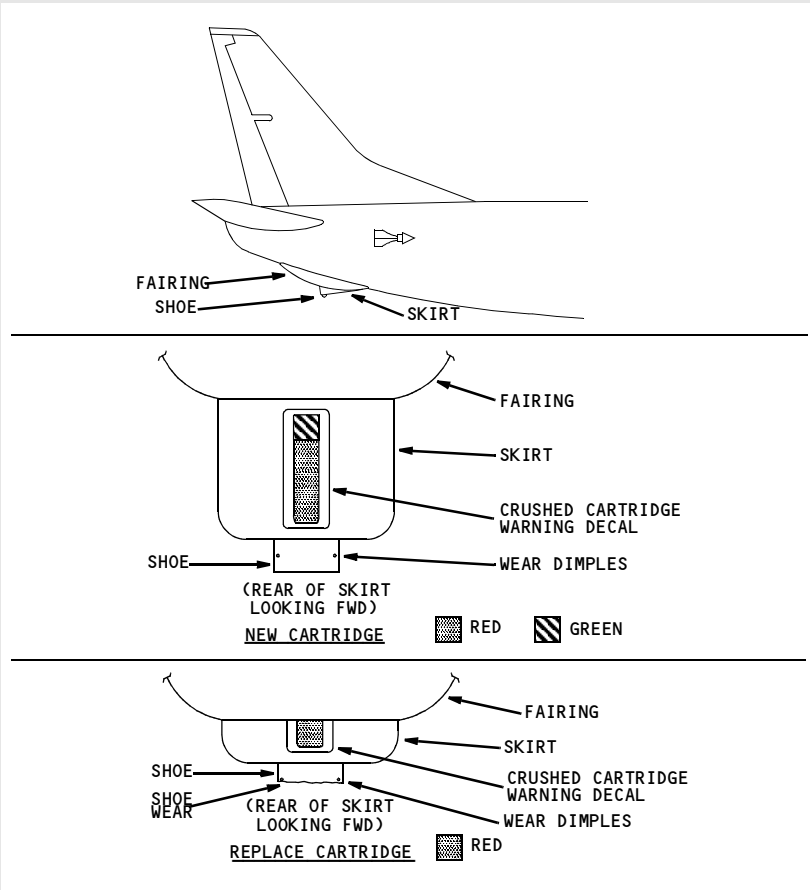

Copyright © The Boeing Company. See title page for details.

Intentionally
Blank

Copyright © The Boeing Company. See title page for details.